Railway circular connectors
Souriau VGE1 and FER1 series

Powering Business Worldwide

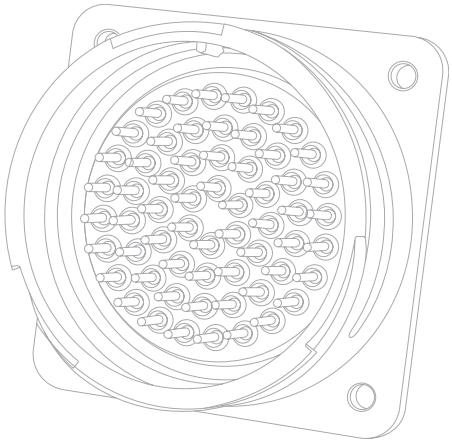

VGE1 and FER1 series

Railway circular connectors

Typical applications

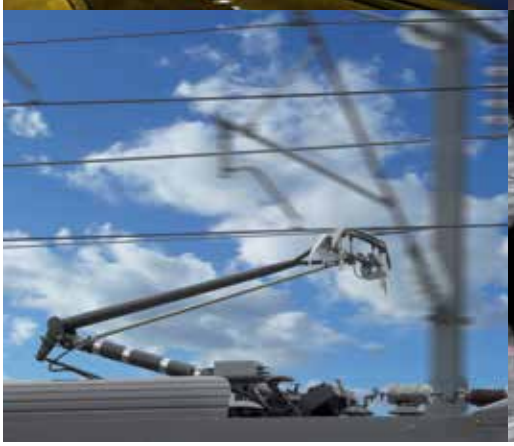

Table of contents

Overview 4
- Technical specifications 4
- Range overview 6
- Layouts 8
- Heating curves 10
- Data transmission performance 13
- Ordering information 14

Connectors 15
- VGE1 receptacle 15
- VGE1 plug 17
- VGE1 receptacle with PC tails contacts 19
- VGE1 jam nut receptacle with shielding ring 20
- VGE1 receptacle with serrations 21
- VGE1 plug with serrations 22
- FER1 receptacle 23
- FER1 plug 24
- VGE1 connector mated length 25
- VGE1 & FER1 insert orientations 25

Contacts 26
- Description 26
- Contact selector guide 26
- Packaging 26
- Machined crimp contacts 27
- Quadrax contacts 28
- ELIO® contacts 29

Backshells 30
- Backshells overview 30
- Backshells overview - mating possibilities 31
- VGE1CS & VGE1CE 32
- VGE1SS & VGE1SE 34
- VGE1JS & VGE1JE 36
- VGE1KS & VGE1KE 38
- VGE1TS & VGE1TE 40
- VGE1VS & VGE1VE 42
- VGE1RS 44
- VGE1PS 45
- VGE1 specific PS backshell with braid fixation accessory 47
- VGE1PE 48

Accessories 49
- Grommet 49
- Metallic caps 50
- Panel gasket for VGE1 & FER1 receptacles 51
- Fixing plate for VGE1 & FER1 receptacles 52

Technical Information 53
- Contact crimping instruction 53
- Contact crimp tooling / Contact removal 54
- Contact mounting 55
- Cabling with backshell 56
- Backshell mounting sequence & coupling torque 57
- Modular gasket for backshell JS, JE, KS & KE 57
- How to harness a shielded cable 58
- Quadrax crimping 61
- Backshells exploded views 62

Souriau VGE1 and FER1 series

Technical specifications

Materials

Shell
- Aluminum alloy, conductive plating

Insert
- Hard thermoplastic
  - HL3/R22 & HL3/R23 following EN 45545-2
  - NFPA 130 compliant
  - JRMA class 3

Contacts
- Machined crimp contacts / PCB contacts

Mechanical

Design
- Derived from MIL-DTL-5015 and VG 95234

Coupling system
- VGE1: 1/3 bayonet coupling with an audible click and a yellow point indicating end of coupling
- FER1: screw coupling

Durability
- 500 mating cycles

Shock and vibration resistance
- According to EN 61 373 - cat.2, for cat. 3, refer to Eaton

Drop
- Free fall of plug at a height of 0.75 m, no mechanical damage following NFF 61-030

Environmental

RoHS compliant

Operating temperature
- -40° C to +100° C

Dry heat test
- 100° for 96 hours

Salt spray resistance
- 500 hours

Damp heat
- 21 days, 40°C, 95% relative humidity

Sealing level - IP67 in mated condition
- Cable: with sealing gland backshells, JS/JE - KS/KE - TS/TE - VS/VE
- Wires: with grommet

Dynamic sealing
- IP67 when cable is moving

Resistance to fluids
- Gas oil, mineral oil, acid bath, basic bath, following NF F 61-030
- Oxalic acid

Electrical

Contacts resistance, following NF F 61-030
- Contact #20: 6 mΩ max
- Contact #16: 2.5 mΩ max
- Contact #12: 1.3 mΩ max
- Contact #8: 0.9 mΩ max
- Quadrax contacts #20: ≤ 6 mΩ, ≤ 2 mΩ (cell)

Contact rating
- Contact #20: 7A
- Contact #16: 15A
- Contact #12: 20A
- Contact #8: 30A

- **Dielectric resistance**
- Contact #20: 1,500 volts/mm
- Contact #16: 2,550 volts/mm
- Contact #12: 3,250 volts/mm
- Contact #8: 3,250 volts/mm
- Quadrax between contacts #20: ≥ 1,000V
- Quadrax between cell / contacts #20: ≥ 500V

Insulation resistance
- ≥ 3,000 MΩ (under 100 Vdc)
- ≥ 5,000 MΩ (under 500 Vdc)
- ≥ 4,000 MΩ (under 220 Vdc)
- Quadrax: ≥ 3,000 MΩ (contacts #20)

Creepage and clearance
- 14A6: 6 mm creepage, 2 mm clearance
- 14A10: 2.1 mm creepage, 0.8 mm clearance
- 18-19, 22-14, 28-21, 40A60: 9 mm creepage, 4mm clearance
- 20-15, 24-10, 32A13, 36A22, 40A35:
- 12 mm creepage, 8mm clearance

Operating voltage
- 14A6: 110 V following NF F 61-030
- 14A10: 110V following EN 50-124
- 18-19, 22-14, 28-21, 40A60: 220 V following NF F 61-030
- 20-15, 24-10, 32A13, 36A22, 40A35: 500 DC following NF F 61-030

Shell continuity
- 20 mΩ max

High speed data transmission
- IEC11-801
- Standard contact: cat. 5
- Quadrax contact: cat. 6
- For more than cat. 6, refer to Eaton

VGE1 receptacle

VGE1 plug

FER1 - Threaded version of VGE1 available in sizes 18, 22 & 28

FER1 plug

FER1 receptacle

Souriau VGE1 and FER1 series

Range overview

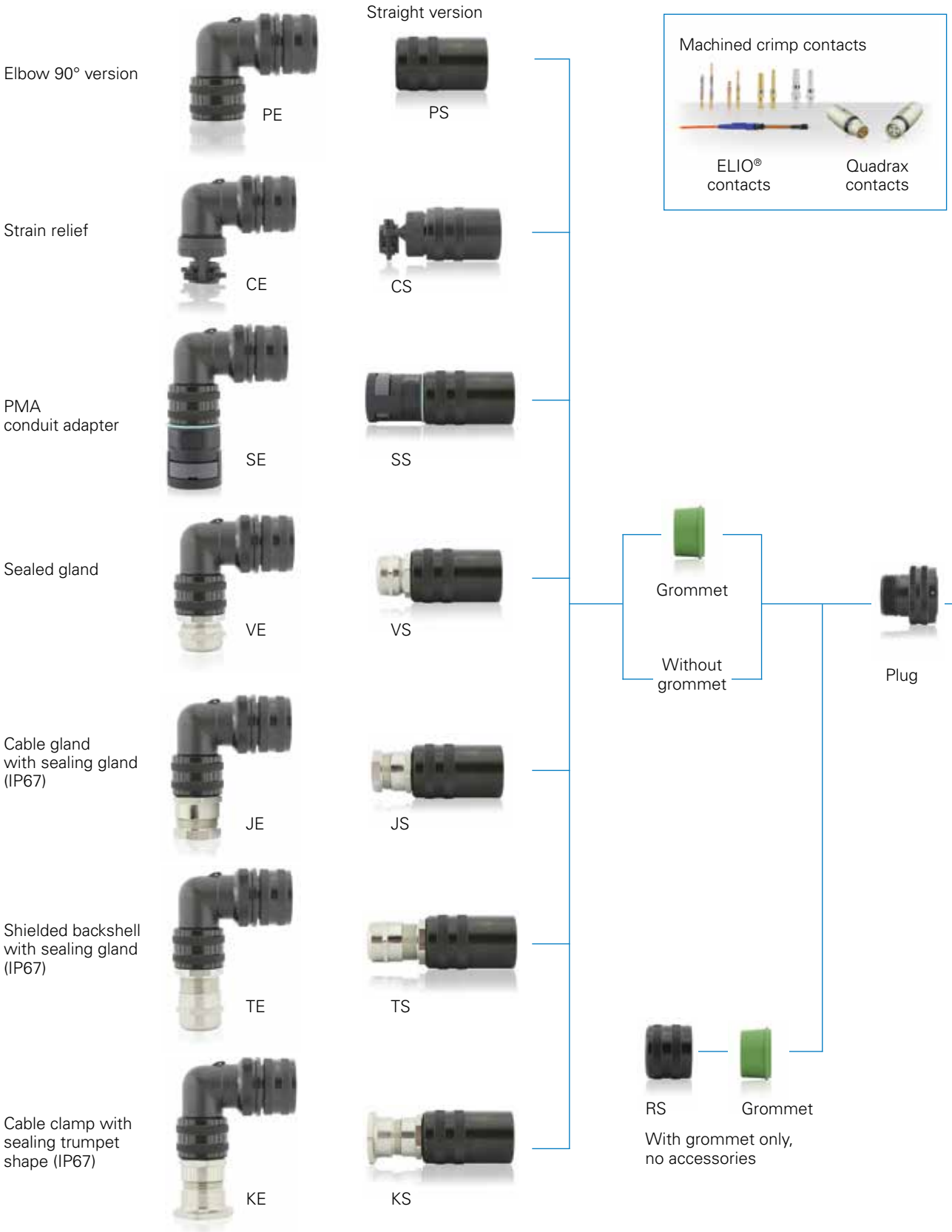

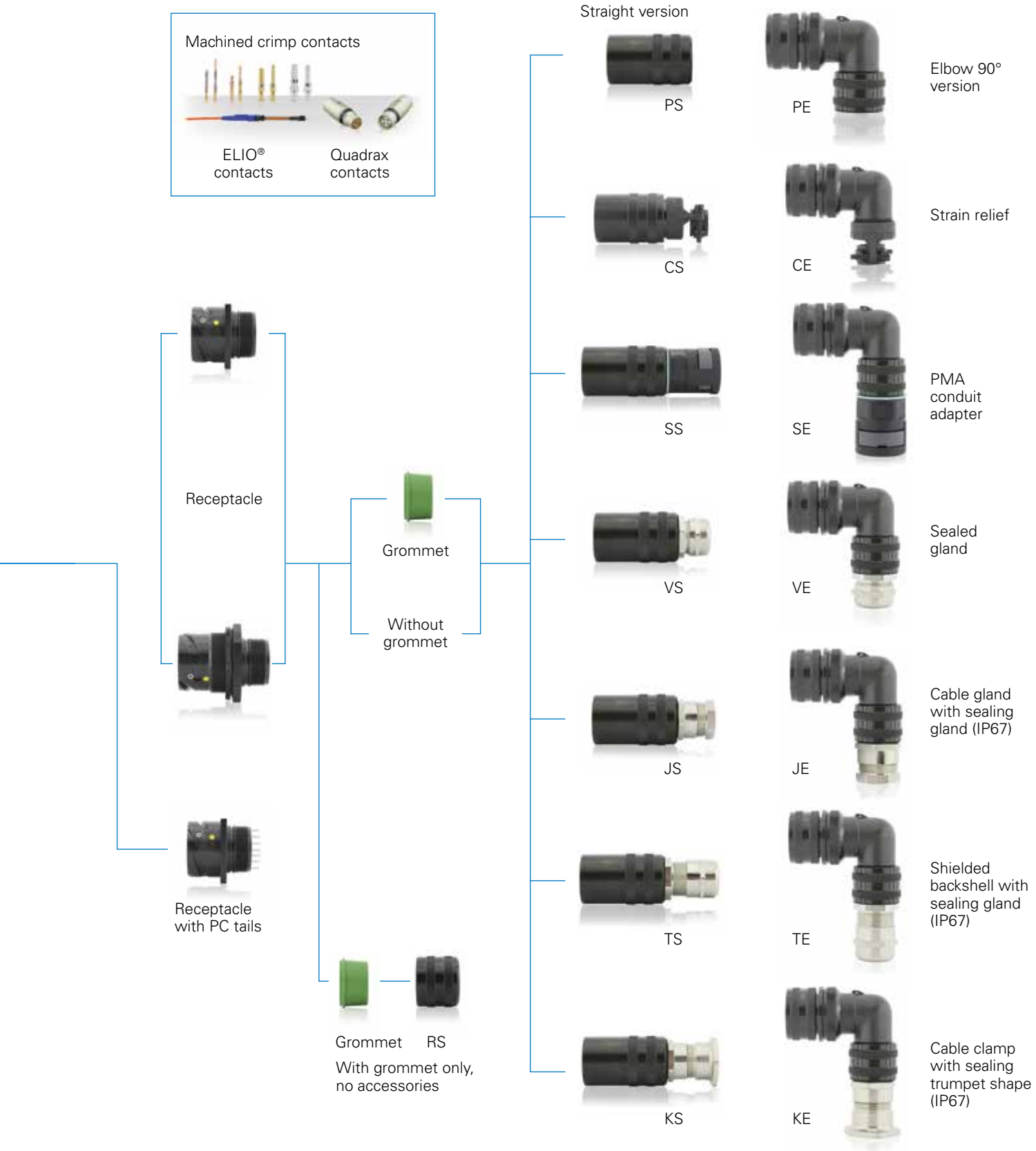
Machined crimp contacts
ELIO® contacts
Quadrax contacts
Receptacle
Receptacle with PC tails
Grommet
Without grommet
Grommet
RS
With grommet only, no accessories
Straight version
PS
PE
Elbow 90° version
CS
CE
Strain relief
SS
SE
PMA conduit adapter
VS
VE
Sealed gland
JS
JE
Cable gland with sealing gland (IP67)
TS
TE
Shielded backshell with sealing gland (IP67)
KS
KE
Cable clamp with sealing trumpet shape (IP67)

Series overview

Electrical parameter according to NF F 61-030

Contact #8 (Ø 3.6 mm)	Contact #12 (Ø 2.4 mm)	Contact #16 (Ø 1.6 mm)	Contact #20 (Ø 1.0 mm)	Contact ELIO	Contact Quadrax
Size 14					
Size 18		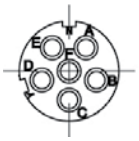 14A6 ■ 15A 110V 6 contacts 6xØ1.6 (#16)	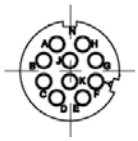 14A10 (1) ■ 7A 110V 10 contacts 10xØ1.0 (#20)		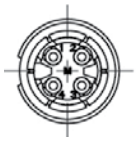 14R ■ 7A 110V 4 contacts 4xØ1.0 (#20)
Size 20		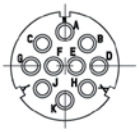 18-19 ■ ▲ 15A 220V 10 contacts 10xØ1.6 (#16)		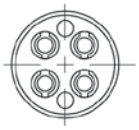 18-04 4 contacts ELIO®	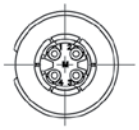 18A1 ■ ▲ 7A 500V 4 contacts 4xØ1.0 (#20)
Size 22	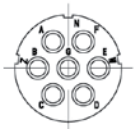 20-15 ■ 20A 500 DC 7 contacts 7xØ2.4 (#12)				
Size 24		 22-14 ■ ▲ 15A 220V 19 contacts 19xØ1.6 (#16)		 22-08 8 contacts ELIO	
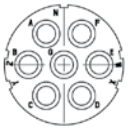 24-10 ■ 30A 500 DC 7 contacts 7xØ3.6 (#8)				 24-12 12 contacts ELIO	

■ VGE1 standard version
▲ FER1 standard version
(1): Electrical parameter according to EN 50-124

Series overview

Electrical parameter according to NF F 61-030

Contact #12 (Ø 2.4 mm)	Contact #16 (Ø 1.6 mm)
Size 28	
	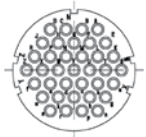 28-21 ■ ▲ 15A 220V 37 contacts 37xØ1.6 (#16)
Size 32	
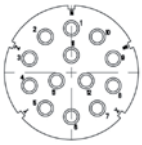 32A13 ■ 20A 500V 13 contacts 13xØ2.4 (#12)	
Size 36	
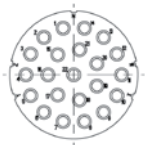 36A22 ■ 20A 500 DC 22 contacts 22xØ2.4 (#12)	
Size 40	
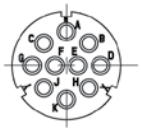 40A35 ■ 20A 500 DC 35 contacts 35xØ2.4 (#12)	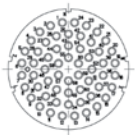 40A60 ■ 15A 220V 60 contacts 60xØ1.6 (#16)

■ VGE1 standard version ▲ FER1 standard version

Souriau VGE1 and FER1 series

Heating curves

Test conditions:

- Current per contact
- All contacts loaded
- Maximum heating following NF F 61-030: 50°C

Size 18

18-19 ■ ▲
10 contacts
10xØ1.6 (#16)

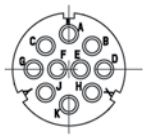

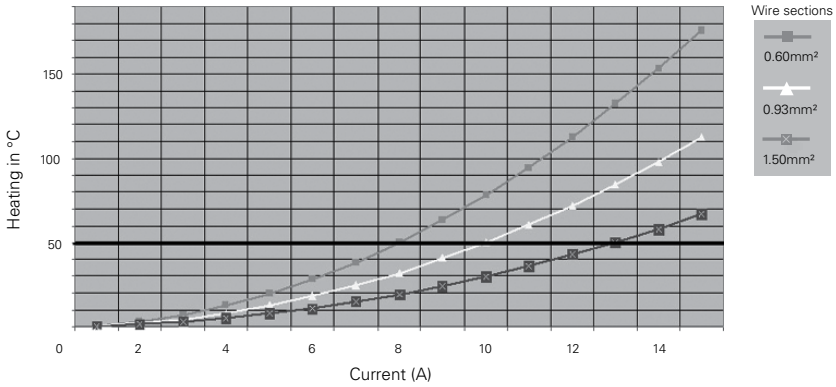

18-19 only maximum operating voltage:
220 V following NF F 61-030

Size 20

20-15 ■
7 contacts
7xØ2.4 (#12)

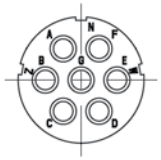

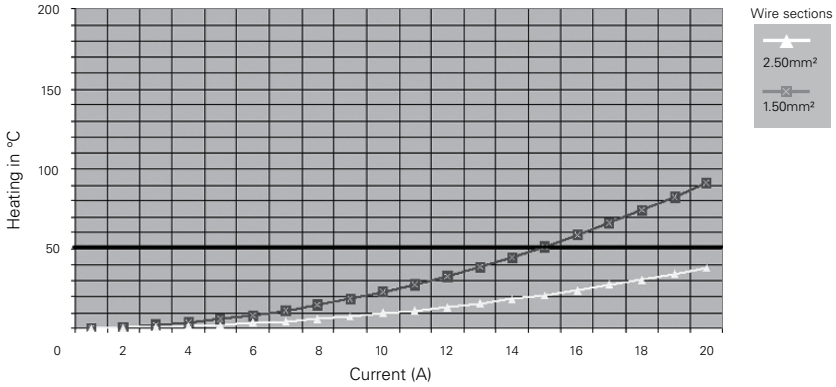

Maximum operating voltage:
500 DC following NF F 61-030

Size 22

22-14 ■ ▲
19 contacts
19xØ1.6 (#16)

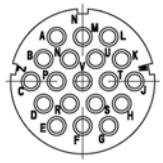

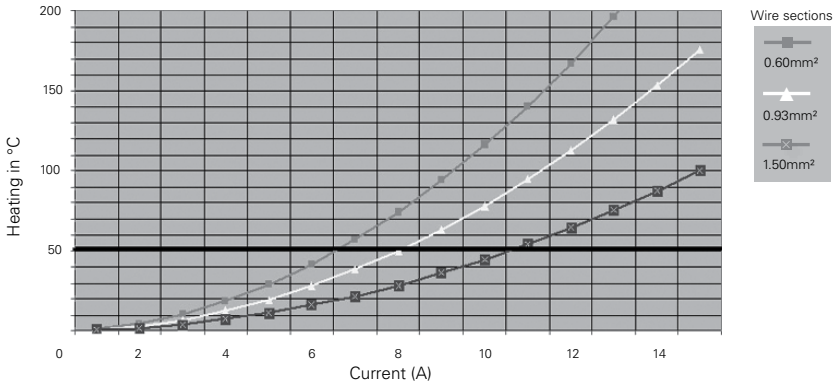

Maximum operating voltage:
220 V following NF F 61-030

Size 24

24-10 ■
7 contacts
7xØ3.6 (#8)

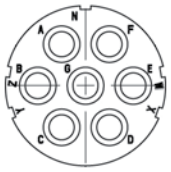

Maximum operating voltage:
500 DC following NF F 61-030

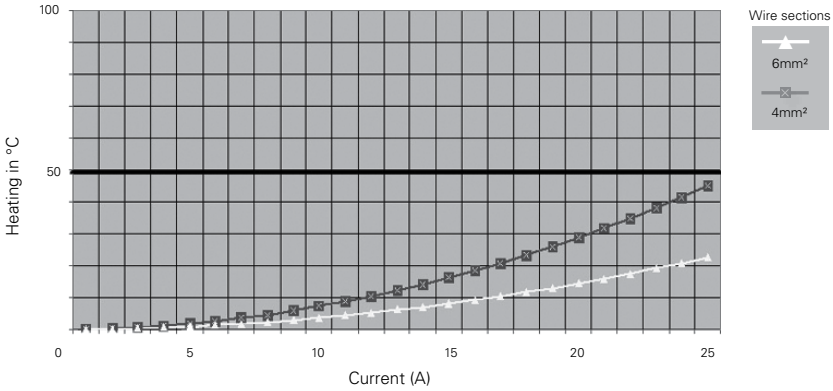

Size 28

28-21 ■ ▲
37 contacts
37xØ1.6 (#16)

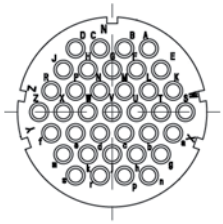

Maximum operating voltage:
220 V following NF F 61-030

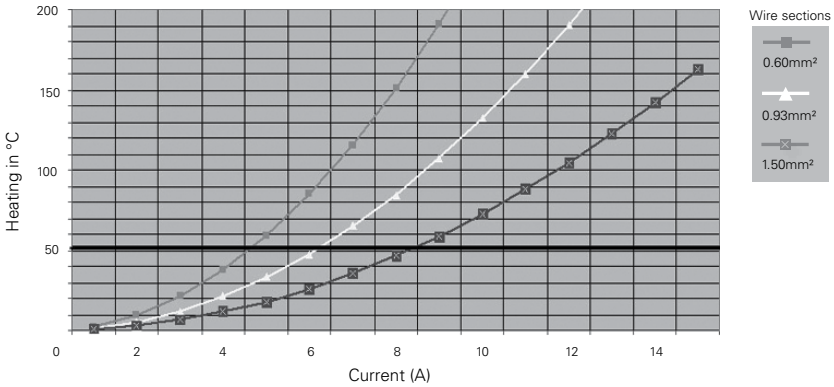

Size 32

32A13 ■
13 contacts
13xØ2.4 (#12)

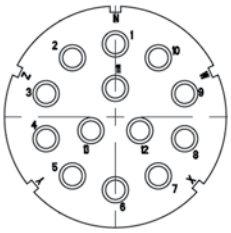

Maximum operating voltage:
220 V following NF F 61-030

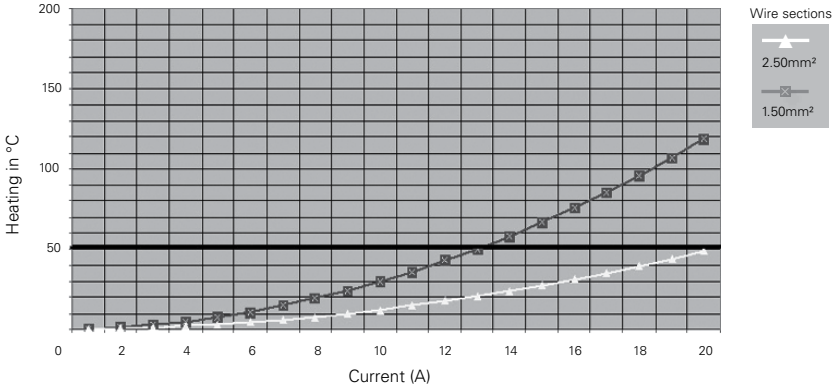

Heating curves

Size 36

36A22 ■
20A 500Vcc
22 contacts
22xØ2.4 (#12)

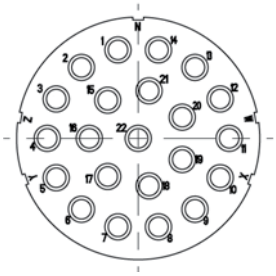

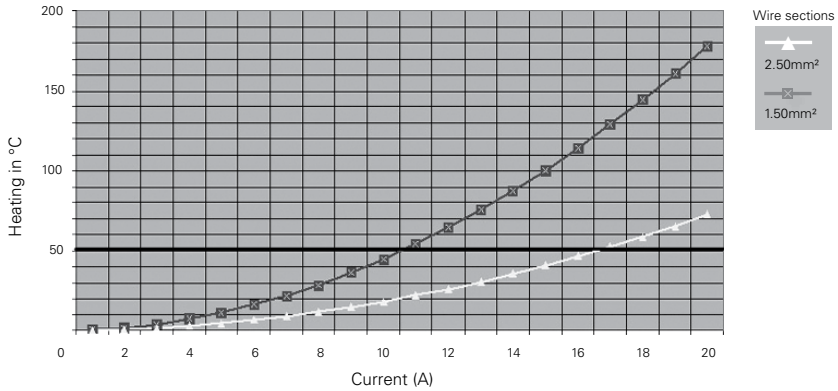

Maximum operating voltage:
500 DC following NF F 61-030

Size 40

40A35 ■
20A 500Vcc
35 contacts
35xØ2.4 (#12)

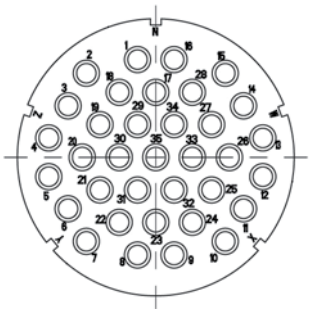

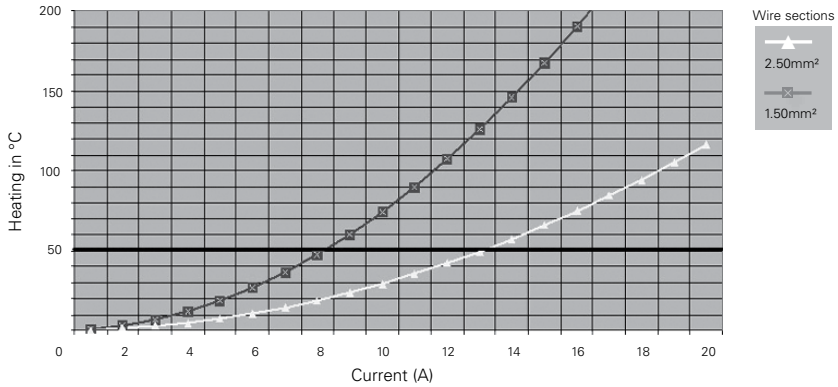

Maximum operating voltage:
500 DC following NF F 61-030

40A60 ■
15A 220V
60 contacts
60xØ1.6 (#16)

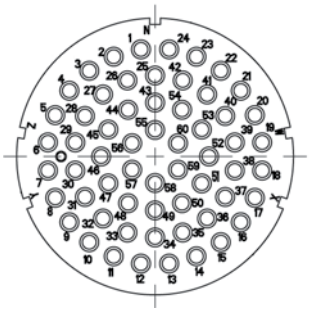

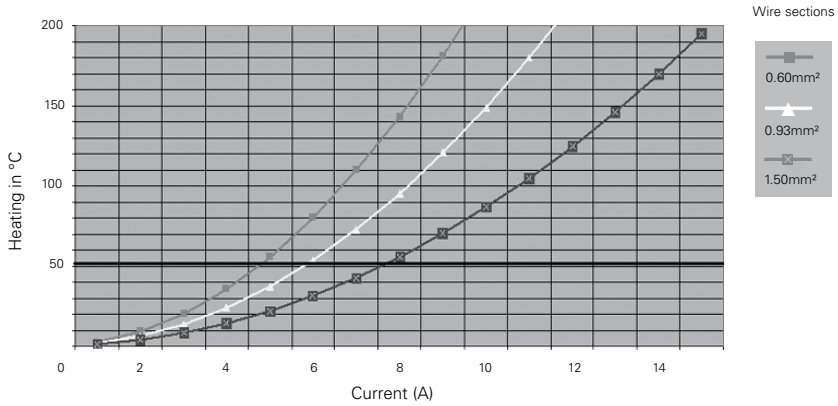

Maximum operating voltage:
220 V following NF F 61-030

High-speed data transmission with layouts 18-19, 14R and 18A1

Tested according to IEC 11-801.

18-19

Cat. 5 level obtained with 4 contacts #16

Example of performances of a 2 pair cable with layout 18-19. For cabling specification, refer to Eaton.

18-19

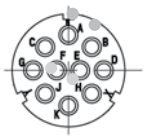

Standard version with 4 contacts #16: Cat. 5 / IEC11-801

Return Loss

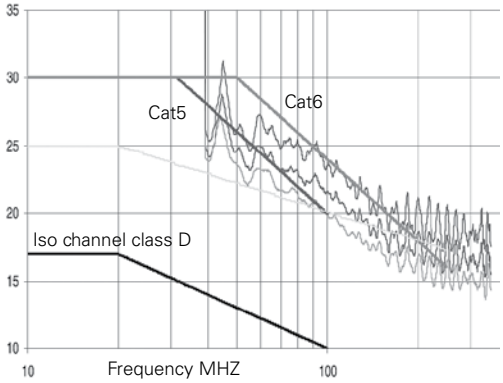

Next

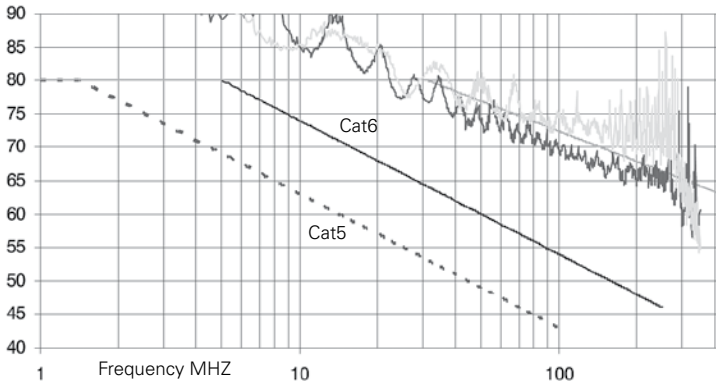

Quadrax-14R and 18A1

Cat. 6 level obtained with 1 contact Quadrax

Example of performances of a Quadrax cable with layout 18A1.

14R

18A1

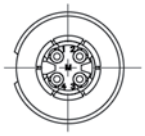

Quadrax version: Cat. 6 / IEC11-801

Return Loss

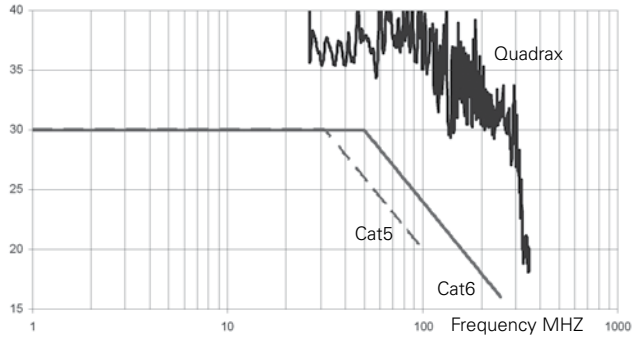

Next

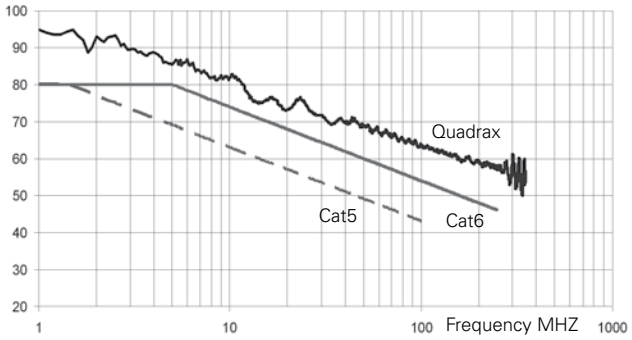

Souriau VGE1 and FER1 series

Ordering information

Receptacle, plug, backshells, contacts and accessories must be ordered separately.

VGE1

VGE1 B 22 14 P N 04

Basic series

Shell type:
- **B:** Rear mounting receptacle
- **D:** Plug
- **C:** Rear mounting receptacle for PC tails contact #16
- **H:** Jam nut receptacle with shielding ring - only available for sizes 18 and 22

Shell size:
14; 18; 20; 22; 24; 28; 32; 36; 40

Layouts:
see Page **8**

Contact type:
- **P:** Pin
- **S:** Socket

Insert orientation:
see **Page 25**
N; W; X; Y; Z or 0
(**0** = Insert not installed in the shell)

Specification code (optional):
- **04:** Receptacle delivered with non-conductive panel gasket
- **05:** Receptacle delivered with conductive panel gasket
- **11:** Receptacle and plug delivered with plastic cap

FER1

FER1 B 22 14 P N 04

Basic series

Shell type:
- **B:** Rear mounting receptacle
- **D:** Plug

Shell size:
18; 22; 28

Layouts:
see **Page 8**

Contact type:
- **P:** Pin
- **S:** Socket

Insert orientation:
see **Page 25**
N; W; X; Y; Z or 0
(**0** = Insert not installed in the shell)

Specification code (optional):
- **04:** Receptacle delivered with non-conductive panel gasket
- **05:** Receptacle delivered with conductive panel gasket
- **11:** Receptacle and plug delivered with plastic cap

Backshell

VGE1 J S 18 00 0 0 –

Basic series

Shell type:
- **R:** Backnut
- **C:** Strain relief
- **S:** Conduit adapter
- **J:** Cable clamp with sealing gland
- **K:** Cable clamp with sealing gland (trumpet shape)
- **T:** Shielded backshell with sealing gland
- **V:** Sealing gland
- **P:** Adapter with thread outlet (without accessory)

- **S:** Straight backshell
- **E:** Elbow backshell

Shell size:
14; 18; 20; 22; 24; 28; 32; 36; 40

Layout (if grommet needed) **or 00** (without grommet)

Adapter type:
- **1:** Long
- **0:** Short, or other specification code

Specification:
0 for standard backshell. For specific requirement, refer to Eaton

Grommet type:
- **-:** Without grommet
- **M:** Male
- **L:** Female

VGE1 receptacle

Connector part numbers

Shell size	Layout	Number of contacts	Contact size	Contact type	Orientation [1]	Part numbers [2]
14	14A6	6	#16	Male	O, N, Y	**VGE1 B 14A6 PN**
		6	#16	Female	O, N, Y	**VGE1 B 14A6 SN**
	14A10	10	#20	Male	O, N, Y	**VGE1 B 14A10 PN**
		10	#20	Female	O, N, Y	**VGE1 B 14A10 SN**
	14R	1	Quadrax	Male	-	**VGE1 B 14R**
18	18-19	10	#16	Male	O, N, X, Y	**VGE1 B 1819 PN**
		10	#16	Female	O, N, X, Y	**VGE1 B 1819 SN**
	18A1	1	Quadrax	Male	N	**VGE1 B 18A1 PN**
		1	Quadrax	Female	N	**VGE1 B 18A1 SN**
	18-04	4	ELIO®	Male	N	**VGE1 B 18E04 GN**
		4	ELIO®	Female	N	**VGE1 B 18E04 JN**
20	20-15	7	#12	Male	O, N, W, Z	**VGE1 B 2015 PN**
		7	#12	Female	O, N, W, Z	**VGE1 B 2015 SN**
22	22-14	19	#16	Male	O, N, W, Z	**VGE1 B 2214 PN**
		19	#16	Female	O, N, W, Z	**VGE1 B 2214 SN**
24	24-10	7	#8	Male	O, N, W, X, Y, Z	**VGE1 B 2410 PN**
		7	#8	Female	O, N, W, X, Y, Z	**VGE1 B 2410 SN**
28	28-21	37	#16	Male	O, N, W, X, Y, Z	**VGE1 B 2821 PN**
		37	#16	Female	O, N, W, X, Y, Z	**VGE1 B 2821 SN**
32	32A13	13	#12	Male	O, N, W, X, Y, Z	**VGE1 B 32A13 PN**
		13	#12	Female	O, N, W, X, Y, Z	**VGE1 B 32A13 SN**
36	36A22	22	#12	Male	O, N, W, X, Y, Z	**VGE1 B 36A22 PN**
		22	#12	Female	O, N, W, X, Y, Z	**VGE1 B 36A22 SN**
40	40A35	35	#12	Male	O, N, W, X, Y, Z	**VGE1 B 40A35 PN**
		35	#12	Female	O, N, W, X, Y, Z	**VGE1 B 40A35 SN**
	40A60	60	#16	Male	O, N, W, X, Y, Z	**VGE1 B 40A60 PN**
		60	#16	Female	O, N, W, X, Y, Z	**VGE1 B 40A60 SN**

(1): For orientation see **Page 25**
(2): Example of part numbers with orientation "N". "N" can be replaced by other orientation

VGE1 receptacle

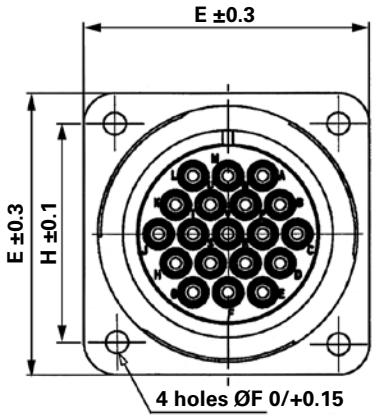

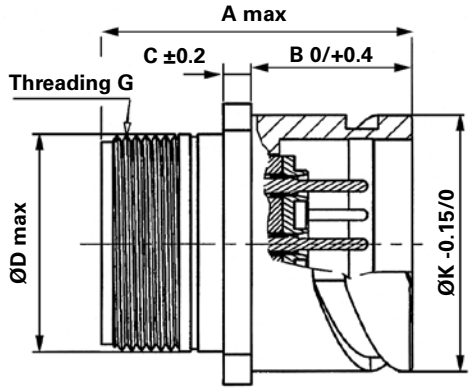

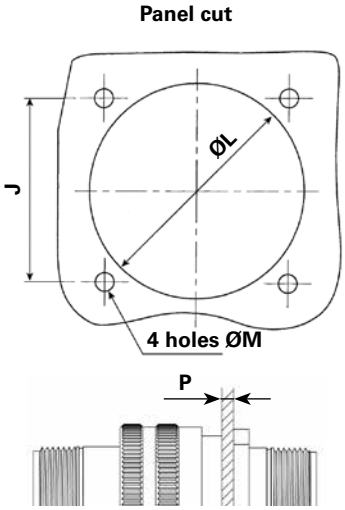

Connector dimensions (See **Page 25** for mated connector dimensions)

Part numbers [2]	A	B	C	ØD	E	ØF	Threading G Class 2A	H	ØK	Weight [3]	J±0.15	ØL±0.3	ØM±0.10	P
VGE1 B 14A6 PN	40.5	18.4	3.2	19.2	30	3.25	3/4"x20 UNEF	23	24.6	24 g	23	24.7	3.4	3
VGE1 B 14A6 SN	40.5	18.4	3.2	19.2	30	3.25	3/4"x20 UNEF	23	24.6	25 g	23	24.7	3.4	3
VGE1 B 14A10 PN	40.5	18.4	3.2	19.2	30	3.25	3/4"x20 UNEF	23	24.6	23 g	23	24.7	3.4	3
VGE1 B 14A10 SN	40.5	18.4	3.2	19.2	30	3.25	3/4"x20 UNEF	23	24.6	25 g	23	24.7	3.4	3
VGE1 B 14R	40.5	18.4	3.2	19.2	30	3.25	3/4"x20 UNEF	23	24.6	21 g	23	24.7	3.4	3
VGE1 B 1819 PN	45.5	23.05	4	25.5	35	3.25	1"x20 UNEF	27	30.8	52 g	27	31.2	3.4	3
VGE1 B 1819 SN	45.5	23.05	4	25.5	35	3.25	1"x20 UNEF	27	30.8	47 g	27	31.2	3.4	3
VGE1 B 18A1 PN	45.5	23.05	4	25.5	35	3.25	1"x20 UNEF	27	30.8	47 g	27	31.2	3.4	3
VGE1 B 18A1 SN	45.5	23.05	4	25.5	35	3.25	1"x20 UNEF	27	30.8	40 g	27	31.2	3.4	3
VGE1 B 18E04 GN	45.5	23.05	4	25.5	35	3.25	1"x20 UNEF	27	30.8	41 g	27	31.2	3.4	3
VGE1 B 18E04 JN	45.5	23.05	4	25.5	35	3.25	1"x20 UNEF	27	30.8	48 g	27	31.2	3.4	3
VGE1 B 2015 PN	45.5	23.05	4	28.7	38	3.25	1 1/8"x18 UNEF	29.4	34.2	52 g	29.4	34.6	3.4	3
VGE1 B 2015 SN	45.5	23.05	4	28.7	38	3.25	1 1/8"x18 UNEF	29.4	34.2	60 g	29.4	34.6	3.4	3
VGE1 B 2214 PN	45.5	23.05	4	31.9	41	3.25	1 1/4"x18 UNEF	31.8	37.4	57 g	31.8	37.8	3.4	3
VGE1 B 2214 SN	45.5	23.05	4	31.9	41	3.25	1 1/4"x18 UNEF	31.8	37.4	66 g	31.8	37.8	3.4	3
VGE1 B 2410 PN	45.5	23.05	4	35.2	44.5	3.75	1 3/8"x18 UNEF	34.9	40.9	65 g	34.9	41.3	3.9	3
VGE1 B 2410 SN	45.5	23.05	4	35.2	44.5	3.75	1 3/8"x18 UNEF	34.9	40.9	77 g	34.9	41.3	3.9	3
VGE1 B 2821 PN	48	24.05	4	41.5	50.8	3.75	1 5/8"x18 UNEF	39.7	46.7	92 g	39.7	47.1	3.9	3
VGE1 B 2821 SN	48	24.05	4	41.5	50.8	3.75	1 5/8"x18 UNEF	39.7	46.7	105 g	39.7	47.1	3.9	3
VGE1 B 32A13 PN	48	24.05	4	47.9	57	4.35	1 7/8"x16 UNEF	44.5	53.4	122 g	44.5	53.8	4.5	3
VGE1 B 32A13 SN	48	24.05	4	47.9	57	4.35	1 7/8"x16 UNEF	44.5	53.4	151 g	44.5	53.8	4.5	3
VGE1 B 36A22 PN	48	24.05	4	52.5	63.5	4.35	2 1/16"x16 UNS	49.2	59.6	149 g	49.2	60	4.5	3
VGE1 B 36A22 SN	48	24.05	4	52.5	63.5	4.35	2 1/16"x16 UNS	49.2	59.6	184 g	49.2	60	4.5	3
VGE1 B 40A35 PN	48	24.05	4	59	70	4.35	2 5/16"x16 UNEF	55.5	65.5	170 g	55.5	66.4	4.5	3
VGE1 B 40A35 SN	48	24.05	4	59	70	4.35	2 5/16"x16 UNEF	55.5	65.5	208 g	55.5	66.4	4.5	3
VGE1 B 40A60 PN	48	24.05	4	59	70	4.35	2 5/16"x16 UNEF	55.5	65.5	230 g	55.5	66.4	4.5	3
VGE1 B 40A60 SN	48	24.05	4	59	70	4.35	2 5/16"x16 UNEF	55.5	65.5	208 g	55.5	66.4	4.5	3

(2): Example of part numbers with orientation "N". "N" can be replaced by other orientation - see column orientation
(3): Weight includes receptacle and insert without contacts

Note: All dimensions are in millimeters (mm).

VGE1 plug

Connector part numbers

Shell size	Layout	Number of contacts	Contact size	Contact type	Orientation (1)	Part numbers (2)
14	14A6	6	#16	Male	O, N, Y	**VGE1 D 14A6 PN**
		6	#16	Female	O, N, Y	**VGE1 D 14A6 SN**
	14A10	10	#20	Male	O, N, Y	**VGE1 D 14A10 PN**
		10	#20	Female	O, N, Y	**VGE1 D 14A10 SN**
	14R	1	Quadrax	Male	-	**VGE1 D 14R**
18	18-19	10	#16	Male	O, N, X, Y	**VGE1 D 1819 PN**
		10	#16	Female	O, N, Y	**VGE1 D 1819 SN**
	18A1	1	Quadrax	Male	N	**VGE1 D 18A1 PN**
		1	Quadrax	Female	N	**VGE1 D 18A1 SN**
	18-04	4	ELIO®	Male	N	**VGE1 D 18E04 GN**
		4	ELIO®	Female	N	**VGE1 D 18E04 JN**
20	20-15	7	#12	Male	O, N, W, Z	**VGE1 D 2015 PN**
		7	#12	Female	O, N, W, Z	**VGE1 D 2015 SN**
22	22-14	19	#16	Male	O, N, W, Z	**VGE1 D 2214 PN**
		19	#16	Female	O, N, W, Z	**VGE1 D 2214 SN**
24	24-10	7	#8	Male	O, N, W, X, Y, Z	**VGE1 D 2410 PN**
		7	#8	Female	O, N, W, X, Y, Z	**VGE1 D 2410 SN**
28	28-21	37	#16	Male	O, N, W, X, Y, Z	**VGE1 D 2821 PN**
		37	#16	Female	O, N, W, X, Y, Z	**VGE1 D 2821 SN**
32	32A13	13	#12	Male	O, N, W, X, Y, Z	**VGE1 D 32A13 PN**
		13	#12	Female	O, N, W, X, Y, Z	**VGE1 D 32A13 SN**
36	36A22	22	#12	Male	O, N, W, X, Y, Z	**VGE1 D 36A22 PN**
		22	#12	Female	O, N, W, X, Y, Z	**VGE1 D 36A22 SN**
40	40A35	35	#12	Male	O, N, W, X, Y, Z	**VGE1 D 40A35 PN**
		35	#12	Female	O, N, W, X, Y, Z	**VGE1 D 40A35 SN**
	40A60	60	#16	Male	O, N, W, X, Y, Z	**VGE1 D 40A60 PN**
		60	#16	Female	O, N, W, X, Y, Z	**VGE1 D 40A60 SN**

(1): For orientation see **Page 25**
(2): Example of part numbers with orientation "N". "N" can be replaced by other orientation - see column orientation

VGE1 plug

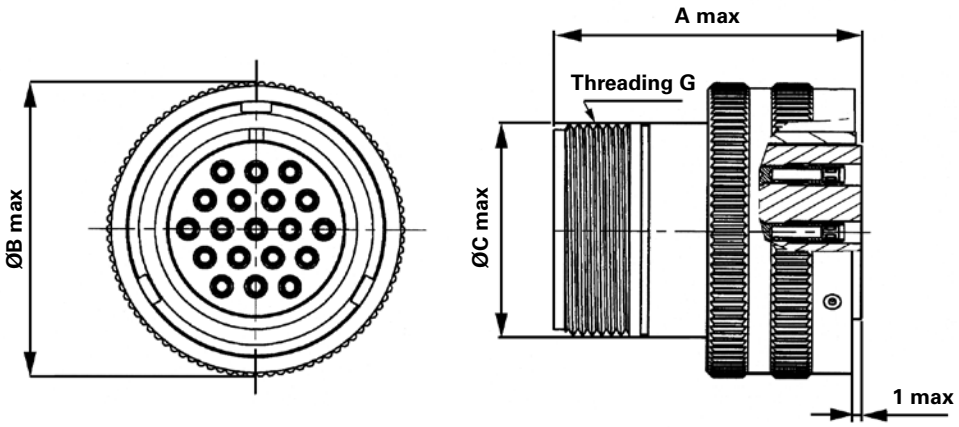

Connector dimensions (See **Page 25** for mated connector dimensions)

Part numbers [2]	A	ØB	ØC	Threading G Class 2A	Weight [3]
VGE1 D 14A6 PN	41	31.7	19.2	3/4"x20 UNEF	27 g
VGE1 D 14A6 SN	41	31.7	19.2	3/4"x20 UNEF	28 g
VGE1 D 14A10 PN	41	31.7	19.2	3/4"x20 UNEF	26 g
VGE1 D 14A10 SN	41	31.7	19.2	3/4"x20 UNEF	28 g
VGE1 D 14R	41	31.7	19.2	3/4"x20 UNEF	24 g
VGE1 D 1819 PN	45.6	37.3	25.5	1"x20 UNEF	59 g
VGE1 D 1819 SN	45.6	37.3	25.5	1"x20 UNEF	53 g
VGE1 D 18A1 PN	45.6	37.3	25.5	1"x20 UNEF	39 g
VGE1 D 18A1 SN	45.6	37.3	25.5	1"x20 UNEF	46 g
VGE1 D 18E04 GN	45.6	37.3	25.5	1"x20 UNEF	39 g
VGE1 D 18E04 JN	45.6	37.3	25.5	1"x20 UNEF	46 g
VGE1 D 2015 PN	45.6	41.5	28.7	1 1/8"x18 UNEF	54 g
VGE1 D 2015 SN	45.6	41.5	28.7	1 1/8"x18 UNEF	61 g
VGE1 D 2214 PN	45.6	44	31.9	1 1/4"x18 UNEF	58 g
VGE1 D 2214 SN	45.6	44	31.9	1 1/4"x18 UNEF	67 g
VGE1 D 2410 PN	45.6	48.5	35.2	1 3/8"x18 UNEF	68 g
VGE1 D 2410 SN	45.6	48.5	35.2	1 3/8"x18 UNEF	79 g
VGE1 D 2821 PN	48.1	55.3	41.5	1 5/8"x18 UNEF	81 g
VGE1 D 2821 SN	48.1	55.3	41.5	1 5/8"x18 UNEF	95 g
VGE1 D 32A13 PN	48.1	62	47.9	1 7/8"x16 UNEF	125 g
VGE1 D 32A13 SN	48.1	62	47.9	1 7/8"x16 UNEF	154 g
VGE1 D 36A22 PN	48.1	66.8	52.5	2 1/6"x16 UNS	135 g
VGE1 D 36A22 SN	48.1	66.8	52.5	2 1/6"x16 UNS	169 g
VGE1 D 40A35 PN	48.1	74.5	59	2 5/16"x16 UNEF	163 g
VGE1 D 40A35 SN	48.1	74.5	59	2 5/16"x16 UNEF	201 g
VGE1 D 40A60 PN	48.1	74.5	59	2 5/16"x16 UNEF	226 g
VGE1 D 40A60 SN	48.1	74.5	59	2 5/16"x16 UNEF	201 g

(2): Example of part numbers with orientation "N". "N" can be replaced by other orientation - see column orientation
(3): Weight for indication - receptacle + insert without contact

Note: All dimensions are in millimeters (mm). Dimensions are not contractual and may be subject to modifications.

VGE1 receptacle with PC tails contacts

Connector part numbers

Shell size	Layout	Contact type	Orientation [1]	Part numbers [2]	PCB plating Gold Ø 1.2	Gold Ø 1	Tin* Ø 1
18	18-19	Male	O, N, X, Y	**VGE1C 1819 PN...**	-	**01**	**14**
22	22-14	Male	O, N, W, Z	**VGE1C 2214 PN...**	-	**01**	**14**
28	28-21	Male	O, N, W, X, Y, Z	**VGE1C 2821 PN...**	-	**01**	**14**

(1): For orientation see **Page 25**
(2): Example of part numbers with orientation "N". "N" can be replaced by other orientation - see column orientation
Examples: With PCB gold plated Ø 1.2 mm VGE1C2214PN, with PCB tin plated Ø 1 mm VGE1C2214PN14, with gold plated Ø 1 mm VGE1C2214PN01
(*): Tin plating only on the tail of the contact

Connector dimensions (See **Page 25** for mated connector dimensions)

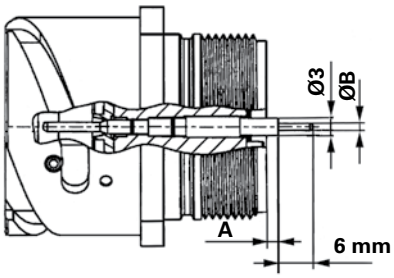

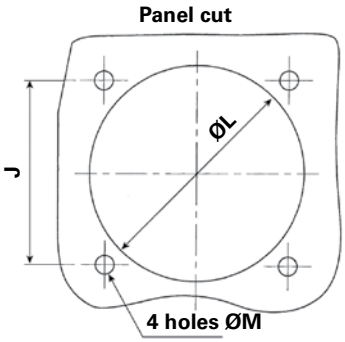

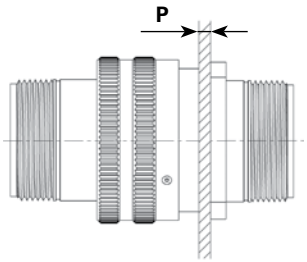

Part numbers [2]	Shell size	A max	ØB max*			J±0.15	ØL±0.3	ØM±0.10	P
VGE1 C 1819 PN...	18	2.00	Gold plating standard (-) Ø 1.2	Gold plating specific (01) Ø 1	Tin plating (14) Ø 1	27	31.2	3.4	3
VGE1 C 2214 PN...	22	2.00	Gold plating standard (-) Ø 1.2	Gold plating specific (01) Ø 1	Tin plating (14) Ø 1	31.8	37.8	3.4	3
VGE1 C 2821 PN...	28	- 0.40	Gold plating standard (-) Ø 1.2	Gold plating specific (01) Ø 1	Tin plating (14) Ø 1	39.7	47.1	3.9	3

Example of part numbers with gold plating standard VGE1C1819PN, with gold plating specific VGE1C1819PN01, with tin plating VGE1C1819PN14
(2): Example of part numbers with orientation "N". "N" can be replaced by other orientation

Note: All dimensions are in millimeters (mm). Dimensions are not contractual and may be subject to modifications.

VGE1 jam nut receptacle with shielding ring

Connector part numbers

Shell size	Layout	Contact type	Orientation [1]	Part numbers [2]
18	18-19	Male	O, N, X, Y	**VGE1 H 1819 PN**
		Female	O, N, X, Y	**VGE1 H 1819 SN**
22	22-14	Male	O, N, W, Z	**VGE1 H 2214 PN**
		Female	O, N, W, Z	**VGE1 H 2214 SN**

(1): For orientation see **Page 25**
(2): Example of part numbers with orientation "N". "N" can be replaced by other orientation - see orientation column

Connector dimensions

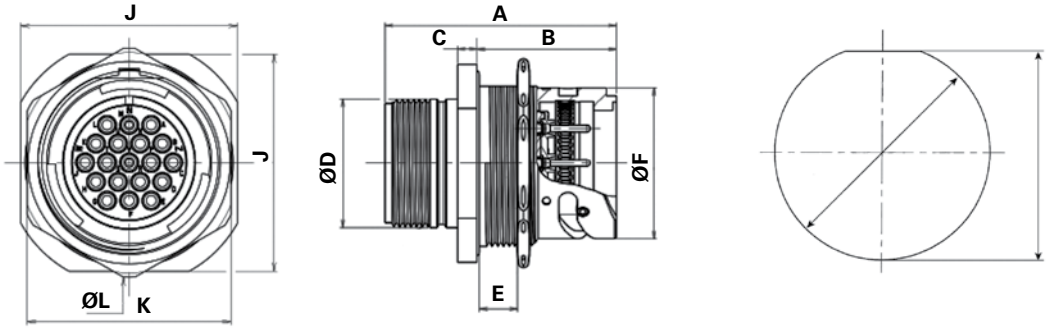

Part numbers [2]	Shell size	A max	B	C	ØD max	E max	ØF	J	K	ØL	M	ØN	Weight [3]
VGE1 H 1819 ...N	18	57.70	34.50	4.80	25.50	10.00	30.80	42.00	39.90	44.50	33.90	35.20	70 g
VGE1 H 2214 ...N	22	57.70	34.50	4.80	31.90	10.00	37.40	49.00	46.00	51.30	40.25	41.55	105 g

(2): Example of Part numbers with orientation "N". "N" can be replaced by other orientation - see column orientation
(3): Weight for indication - receptacle + insert without contact

Note: All dimensions are in millimeters (mm). Dimensions are not contractual and may be subject to modifications

VGE1 receptacle with serrations

Connector part numbers

Shell size	Layout	Number of contacts	Contact type	Orientation (1)	Part numbers (2)
18	18-19	10	Male	O, N, X, Y	**VGE1 B 1819 PN09**
			Female	O, N, X, Y	**VGE1 B 1819 SN09**
22	22-14	19	Male	O, N, W, Z	**VGE1 B 2214 PN09**
			Female	O, N, W, Z	**VGE1 B 2214 SN09**
28	28-21	37	Male	O, N, W, X, Y, Z	**VGE1 B 2821 PN09**
			Female	O, N, W, X, Y, Z	**VGE1 B 2821 SN09**

(1): For orientation see **Page 25**
(2): Example of Part numbers with orientation "N". "N" can be replaced by other orientation - see column orientation

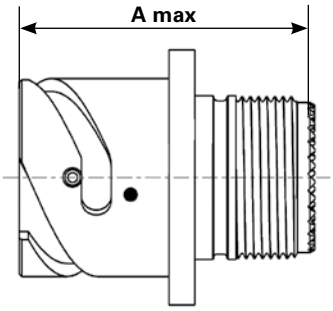

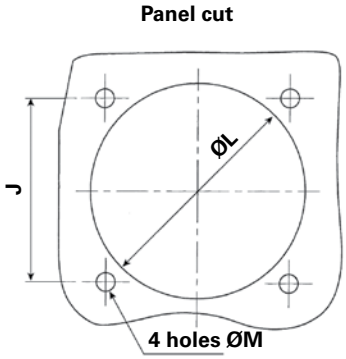

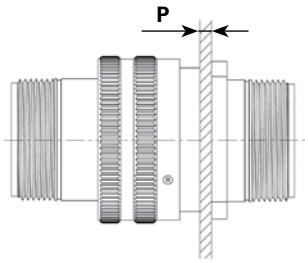

Connector dimensions (connector mated length see **Page 25**)

Part numbers (2)	Shell size	A max	Nb. of teeth	J±0.15	ØL±0.3	ØM±0.10	P
VGE1 C 1819 PN...	18	45.5	28	27	31.2	3.4	3
VGE1 C 2214 PN...	22	45.5	28	31.8	37.8	3.4	3
VGE1 C 2821 PN...	28	48	36	39.7	47.1	3.9	3

Serrations on body connector allow the use of a shorter backshell, for a use in short area.
(2): Example of part numbers with orientation "N". "N" can be replaced by other orientation - see column orientation

Specific backshell dimensions

Part numbers (2)	Shell size	A max	B max	C Capacity cable
VGE1 CE 18 0003	18	80	76.2	Ø4 / Ø15.5
VGE1 CE 22 0003	22	89.9	78.1	Ø9 / Ø15.5
VGE1 CE 28 0003	28	77.9	82	Ø9.5 / Ø19.5

It is not possible to use a grommet with this backshell.

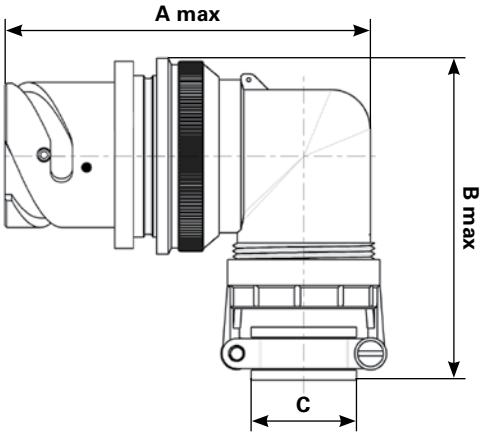

Note: All dimensions are in millimeters (mm). Dimensions are not contractual and may be subject to modifications.

VGE1 plug with serrations

Connector part numbers

Shell size	Layout	Number of contacts	Contact type	Orientation [1]	Part numbers [2]
18	18-19	10	Male	O, N, X, Y	**VGE1 D 1819 PN09**
		10	Female	O, N, X, Y	**VGE1 D 1819 SN09**
22	22-14	19	Male	O, N, W, Z	**VGE1 D 2214 PN09**
		19	Female	O, N, W, Z	**VGE1 D 2214 SN09**
28	28-21	37	Male	O, N, W, X, Y, Z	**VGE1 D 2821 PN09**
		37	Female	O, N, W, X, Y, Z	**VGE1 D 2821 SN09**

(1): For orientation see **Page 25**
(2): Example of part numbers with orientation "N". "N" can be replaced by other orientation - see column orientation

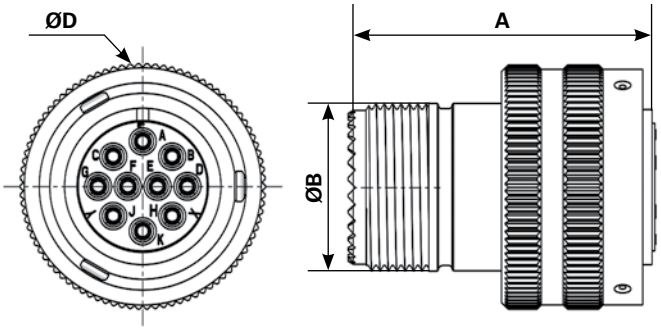

Connector dimensions (connector mated length see **Page 26**)

Part numbers [2]	Shell size	A	ØB	ØD maxi	Nb. of teeth
VGE1 D 1819 ..N09	18	45	25.5	37.3	28
VGE1 D 2214 ..N09	22	45	31.9	44	28
VGE1 D 2821 ..N09	28	45	41.5	55.3	36

Serrations on body connector allow the use of a shorter backshell, for a use in short area.
(2): Example of part numbers with orientation "N". "N" can be replaced by other orientation - see column orientation

Specific backshell dimensions

Part numbers [2]	Shell size	A max	B max	C Capacity cable
VGE1 CE 18 0003	18	79.5	77.8	Ø4 / Ø15.5
VGE1 CE 22 0003	22	89.4	79.8	Ø9 / Ø15.5
VGE1 CE 28 0003	28	91.9	84.6	Ø9.5 / Ø19.5

It is not possible to use a grommet with this backshell.

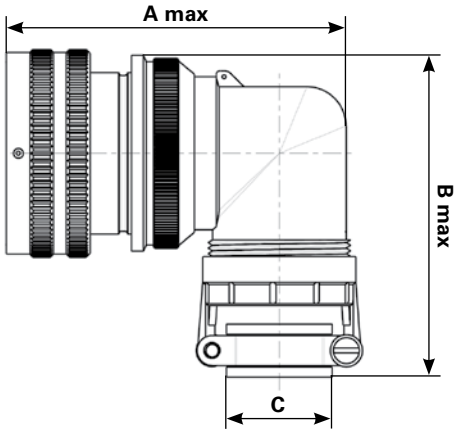

Note: All dimensions are in millimeters (mm). Dimensions are not contractual and may be subject to modifications.

FER1 receptacle

Connector part numbers

Shell size	Layout	Number of contacts	Contact size	Contact type	Orientation [1]	Part numbers [2]
18	18-19	10	#16	Male	O, N, X, Y	**FER1 B 1819 PN**
		10		Female	O, N, X, Y	**FER1 B 1819 SN**
	18A1	1	Quadrax	Male	N	**FER1 B 18A1 PN**
		1		Female	N	**FER1 B 18A1 SN**
22	22-14	19	#16	Male	O, N, W, Z	**FER1 B 2214 PN**
		19		Female	O, N, W, Z	**FER1 B 2214 SN**
28	28-21	37	#16	Male	O, N, W, X, Y, Z	**FER1 B 2821 PN**
		37		Female	O, N, W, X, Y, Z	**FER1 B 2821 SN**

(1): For orientation see **Page 25**
(2): Example of part numbers with orientation "N". "N" can be replaced by other orientation - see column orientation

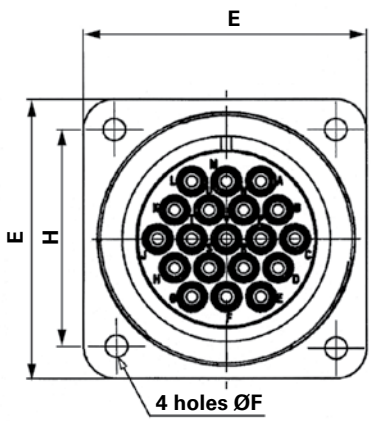

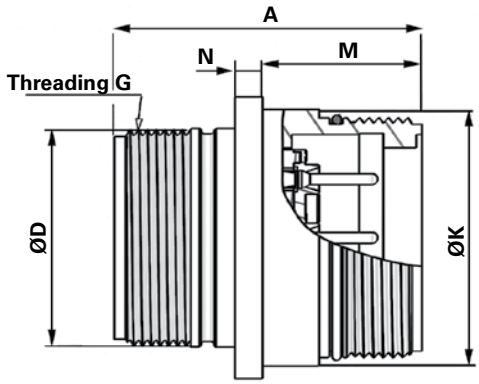

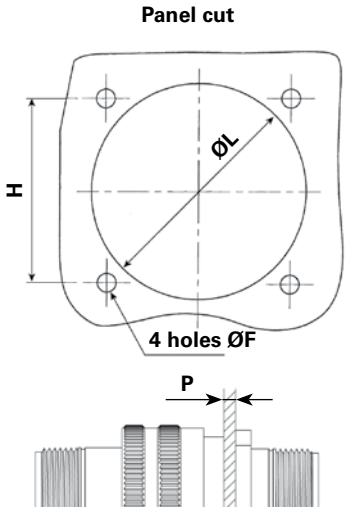

Connector dimensions

Part numbers [2]	A max	M	N	ØD	E	ØF±0.1	H±0.15	ØK	ØL±0.3	Weight [3]
FER1 B 1819 PN	45.5	23.25	4	25.5	35	3.25	27	30.8	31.2	37 g
FER1 B 1819 SN	45.5	23.25	4	25.5	35	3.25	27	30.8	31.2	42 g
FER1 B 18A1 PN	45.5	23.25	4	25.5	35	3.25	27	30.8	31.2	32 g
FER1 B 18A1 SN	45.5	23.25	4	25.5	35	3.25	27	30.8	31.2	37 g
FER1 B 2214 PN	45.5	23.25	4	31.9	41	3.25	31.8	37.4	37.8	51 g
FER1 B 2214 SN	45.5	23.25	4	31.9	41	3.25	31.8	37.4	37.8	60 g
FER1 B 2821 PN	48	24.25	4	41.5	50.8	3.75	39.7	46.7	47.1	81 g
FER1 B 2821 SN	48	24.25	4	41.5	50.8	3.75	39.7	46.7	47.1	94 g

(2): Example of part numbers with orientation "N". "N" can be replaced by other orientation - see column orientation
(3): Weight for indication - receptacle + insert without contact

Note: All dimensions are in millimeters (mm). Dimensions are not contractual and may be subject to modifications.

FER1 plug

Connector part numbers

Shell size	Layout	Number of contacts	Contact size	Contact type	Orientation [1]	Part numbers [2]
18	18-19	10	#16	Male	O, N, X, Y	FER1 D 1819 PN
	18-19	10	#16	Female	O, N, X, Y	FER1 D 1819 SN
	18A1	1	Quadrax	Male	N	FER1 D 18A1 PN
	18A1	1	Quadrax	Female	N	FER1 D 18A1 SN
22	22-14	19	#16	Male	O, N, W, Z	FER1 D 2214 PN
	22-14	19	#16	Female	O, N, W, Z	FER1 D 2214 SN
28	28-21	37	#16	Male	O, N, W, X, Y, Z	FER1 D 2821 PN
	28-21	37	#16	Female	O, N, W, X, Y, Z	FER1 D 2821 SN

(1): For orientation see **Page 25**
(2): Example of part numbers with orientation "N". "N" can be replaced by other orientation - see column orientation

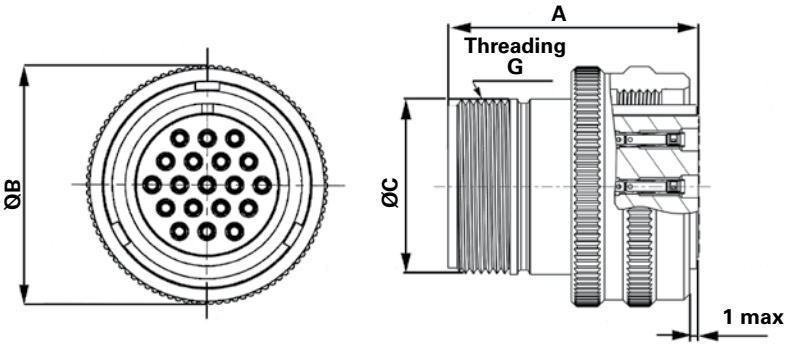

Connector dimensions

Part numbers [2]	A	ØB	ØC	Threading G Class 2A	Weight [3]
FER1 D 1819 PN	45.6	37.3	25.5	1"x20 UNEF	54 g
FER1 D 1819 SN	45.6	37.3	25.5	1"x20 UNEF	58 g
FER1 D 18A1 PN	45.6	37.3	25.5	1"x20 UNEF	44 g
FER1 D 18A1 SN	45.6	37.3	25.5	1"x20 UNEF	51 g
FER1 D 2214 PN	45.6	44	31.9	1 1/4"x18 UNEF	87 g
FER1 D 2214 SN	45.6	44	31.9	1 1/4"x18 UNEF	96 g
FER1 D 2821 PN	48.1	55.3	41.5	1 5/8"x18 UNEF	81 g
FER1 D 2821 SN	48.1	55.3	41.5	1 5/8"x18 UNEF	94 g

(2): Example of part numbers with orientation "N". "N" can be replaced by other orientation - see column orientation
(3): Weight for indication - receptacle + insert without contact

Note: All dimensions are in millimeters (mm). Dimensions are not contractual and may be subject to modifications.

VGE1 connector mated length

Shell size	A max mm	B max mm
14	70	7
18	75.50	7.80
20	75.50	7.80
22	75.50	7.80
24	75.50	7.80
28	80.50	8.80
32	80.50	8.80
36	80.50	8.80
40	80.50	8.80

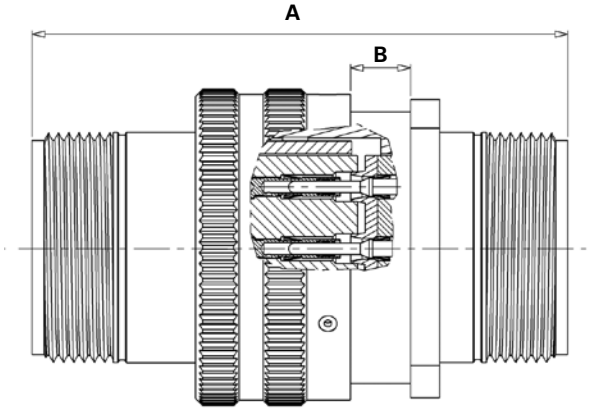

VGE1 & FER1 insert orientations

Layouts	N	W	X	Y	Z
14A6 / 14A10 14R	0°	-	-	108°	-
18-19	0°	-	120°	240°	-
20-15	0°	80°	-	-	280°
22-14	0°	80°	-	-	280°
24-10	0°	80°	110°	250°	280°
28-21	0°	80°	110°	250°	280°
32A13	0°	65°	130°	230°	295°
36A22	0°	80°	110°	250°	280°
40A35	0°	70°	130°	230°	290°
40A60	0°	80°	110°	250°	280°

22-14 position N

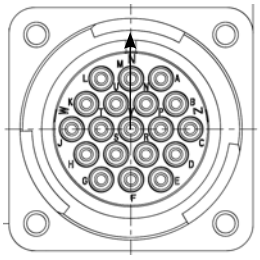

22-14 position W

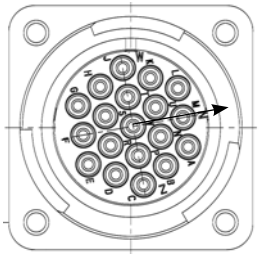

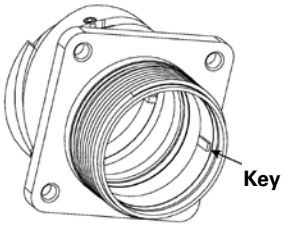

Orientation O: insert not mounted in the shell

Angular position N

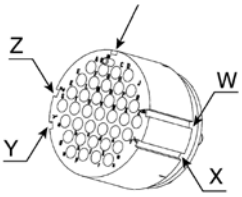

Note: All dimensions are in millimeters (mm).

Description

The VGE1 series is delivered without contacts and uses the same contact style in any layout with the same active part size (i.e., #20, #16, #12, #8). Using the same contact offers several advantages and our contacts are designed for easy snap-in installation without the need for insertion tooling. The standard contacts can lead to cost savings in manufacturing and maintenance. When the contacts are the same across connectors, customers can maintain a smaller inventory of components. The assembly process is simplified because it eliminates the need for added tooling.

In addition to the crimp-style contact options, the VGE1 series can also be equipped with ELIO® optical contacts.

• Machined

• Quadrax

• ELIO® optical contact

Contact selector guide

Electrical characteristics: contact resistance

#20 Ø1mm	Machined	< 4mΩ
#16 Ø1.6mm	Machined	< 3mΩ
#12 Ø2.4mm	Machined	< 5mΩ
#8 Ø3.6mm	Machined	< 5mΩ

Available platings

A	2µ Ni + 2µ Ag
K	Mini 0.4µ gold over 2µ Ni

Packaging

To meet the needs of a wide variety of applications, contacts are offered in bulk packaging for small series and reeled contacts for high-volume production.

#20 (Ø1mm) and #16 (Ø1.6mm) Contacts

50 piece bulk package (machined contacts)

1,000 piece package (machined contacts)

2,000 piece reeled (machined contacts)

#12 (Ø2.4mm) and #8 (Ø3.6mm) contacts

100 piece bulk package (machined contacts)

Note: 1,000 piece bulk package can be ordered by adding 1000 to the end of the part number: e.g.. RC16M23K1000
2,000 piece reeled package can be ordered by adding K at the beginning of the part number: e.g. KRC16M23K

Machined crimp contacts

Part numbers and dimensions

Contact size		Wire size			Part numbers		Insulator Ø	
#	mm	AWG	mm²	Plating	Male	Female	Without grommet	With grommet*
#20	1.0	20-18	0.50-1.00	Gold	RM18W3K	RC18W3K	2.10 max	1.15 min 1.80 max
#16	1.6	22-20	0.32-0.50	Gold	RM20M12K	RC20M12K	3.50 max	1.20 min 2.95 max
#16	1.6	20-16	0.5-1.5	Gold	RM16M23K	RC16M23K	3.50 max	1.20 min 2.95 max
#16	1.6	16-14	1.5-2.5	Gold	RM14M30K	RC14M30K	3.50 max	1.20 min 2.95 max
#12	2.4	20	0.5	Silver	82911459NA	82911458A	4.90 max	1.50 min 3.60 max
	2.4	20	0.5	Gold	82911459NK	82911458K	4.90 max	1.50 min 3.60 max
#12	2.4	18	0.75-1.0	Silver	82911461NA	82911460A	4.90 max	1.50 min 3.60 max
	2.4	18	0.75-1.0	Gold	82911461NK	82911460K	4.90 max	1.50 min 3.60 max
#12	2.4	16	1.5	Silver	82911463NA	82911462A	4.90 max	1.50 min 3.60 max
	2.4	16	1.5	Gold	82911463NK	82911462K	4.90 max	1.50 min 3.60 max
#12	2.4	14	2.5	Silver	82911465NA	82911464A	4.90 max	1.50 min 3.60 max
	2.4	14	2.5	Gold	82911465NK	82911464K	4.90 max	1.50 min 3.60 max
#8	3.6	16	1.5	Silver	82913601A	82913600A	6.50 max	4.20 min 6.20 max
#8	3.6	14	2.5	Silver	82913603A	82913602A	6.50 max	4.20 min 6.20 max
#8	3.6	12	4	Silver	82913605A	82913604A	6.50 max	4.20 min 6.20 max
#8	3.6	10	6	Silver	82913607A	82913606A	6.50 max	4.20 min 6.20 max

(*): For more information see **Page 51**

Note: All dimensions are in millimeters (mm). Dimensions are not contractual and may be subject to modifications.

Quadrax contacts

Ordering information

Cat. 6 level obtained with 1 contact Quadrax

Example of performances with a 18A1 connector and a quarte cable:

Quadrax version: Cat. 6 / IEC11-801

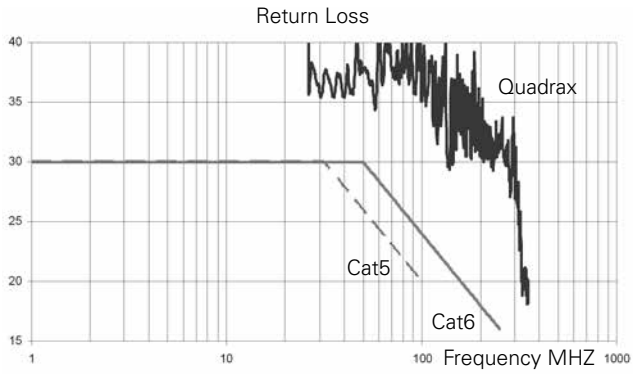

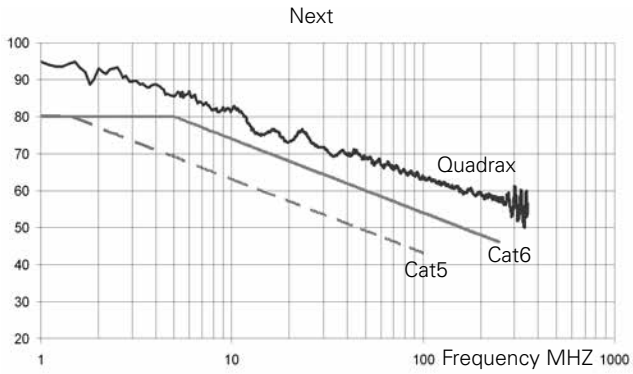

Line wire size		Part number			
AWG	mm²	Male	Female	Max line wire insulator Ø	Plating
24-18	0.21-0.93	**83802035A**	**83802034A**	1.2-2.11 mm	Silver

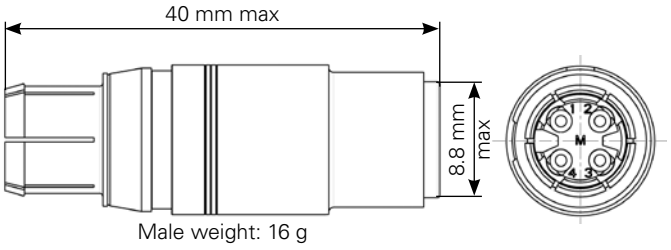

Male weight: 16 g

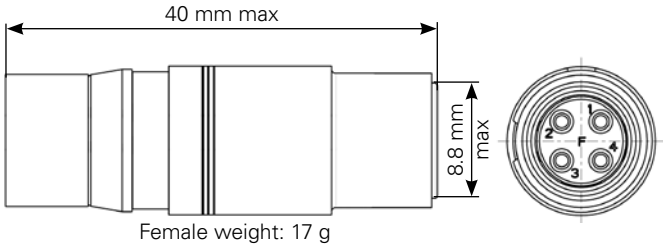

Female weight: 17 g

ELIO® contacts

Ordering information

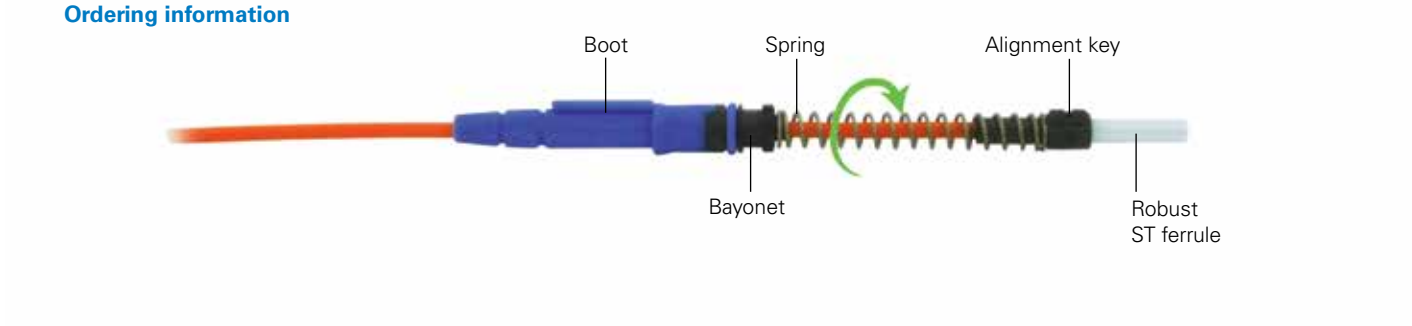

- Robust spring-loaded butt-joint optical contact using ST-style ferrule (diameter 2.5mm)
- Contact size equivalent to a #16 contact
- Compatibility with loose and tight structure cables
- Anti-rotation of the contact for better vibration resistance and optical performance
- Boot-grommet for rear sealing and protection of the cable against excessive bending
- High-level optical performance even after aging
- Bayonet locking system: no tool needed for mounting/dismounting
- Compatible with singlemode, multimode and POF cable e.g. Radox®, Flamex® cable

			Part number - Boot type (1)		
Type	**Cable external diameter mm**	**Fiber type**	**Long boot**	**Short boot**	**No boot(2)**
ELIO®	0.8- 1.0	9/125 µm UPC (Singlemode)	**ELIO09NELA**	**ELIO09NESA**	**ELIO09NENA**
	0.8- 1.0	50 or 62,5/125 µm (Multimode)	**ELIO09NGLA**	**ELIO09NGSA**	**ELIO09NGNA**
	0.8- 1.0	100/140 µm	**ELIO09NDLA**	**ELIO09NDSA**	**ELIO09NDNA**
	1.5- 1.9	9/125 µm UPC (Singlemode)	**ELIO09NELA**	**ELIO09NESA**	**ELIO09NENA**
	1.5- 1.9	50 or 62,5/125 µm (Multimode)	**ELIO18NGLA**	**ELIO18NGSA**	**ELIO18NGNA**
	1.5- 1.9	100/140 µm	**ELIO18NDLA**	**ELIO18NDSA**	**ELIO18NDNA**
	1.7- 2.1	9/125 µm UPC (Singlemode)	**ELIO09NELA**	**ELIO09NESA**	**ELIO09NENA**
	1.7- 2.1	50 or 62,5/125 µm (Multimode)	**ELIO18NGLA**	**ELIO18NGSA**	**ELIO18NGNA**
	1.7- 2.1	100/140 µm	**ELIO18NDLA**	**ELIO18NDSA**	**ELIO18NDNA**

(1): For POF cable, refer to Eaton
(2): Non-waterproof versions only

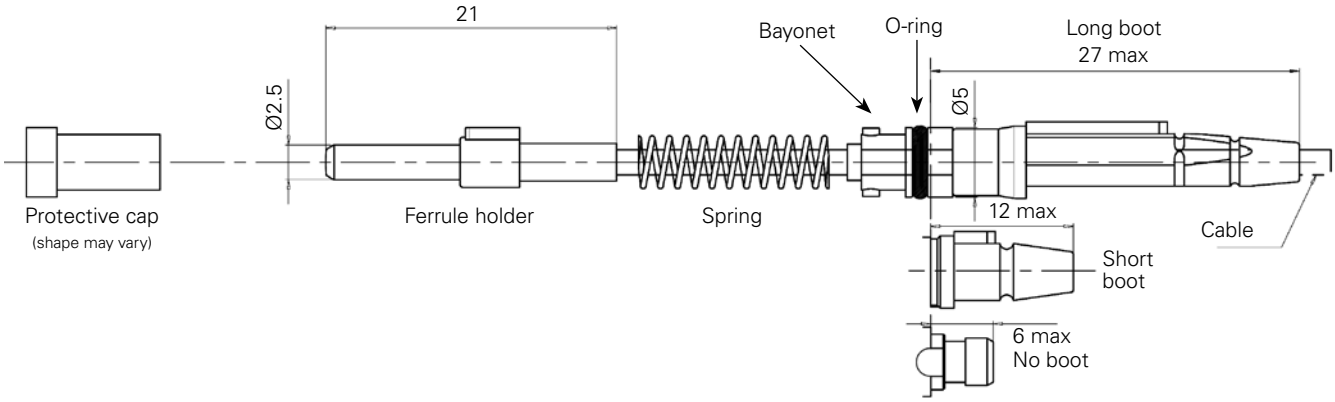

Note: All dimensions are in mm

Backshells overview

Accessories

It is the customer's responsibility to ensure that cables and accessories are compatible with each other. Accessories must be used with an adapter.

Strain relief
Straight version: **CS**...
Elbow 90° version: **CE**...
See **Page 32**

PMA conduit adapter
Straight version: **SS**...
Elbow 90° version: **SE**...
See **Page 34**

Cable clamp
with sealing gland IP67
Straight version: **JS**...
Elbow 90° version: **JE**...
See **Page 36**

Cable clamp
with sealing gland IP 67
(trumpet shape)
Straight version: **KS**...
Elbow 90° version: **KE**...
See **Page 38**

Shielded backshell
with sealing gland IP67
Straight version: **TS**...
Elbow 90° version: **TE**...
See **Page 40**

Sealing gland IP67
Straight version: **VS**...
Elbow 90° version: **VE**...
See **Page 42**

Adapters

Adapters are included in the backshell part numbers or can be ordered separately. The sealing performance of the complete assembly depends on the accessory fitted to the adapter. If the adapter has been sourced from another supplier, the sealing performance of the entire assembly becomes the responsibility of the customer.

Straight short version*:
PS...0. See **Page 45**

Straight long version:
PS...1. See **Page 45**

Elbow 90° version*:
PE... See **Page 48**

* except for VGE1 size 14

Backshells overview - mating possibilities

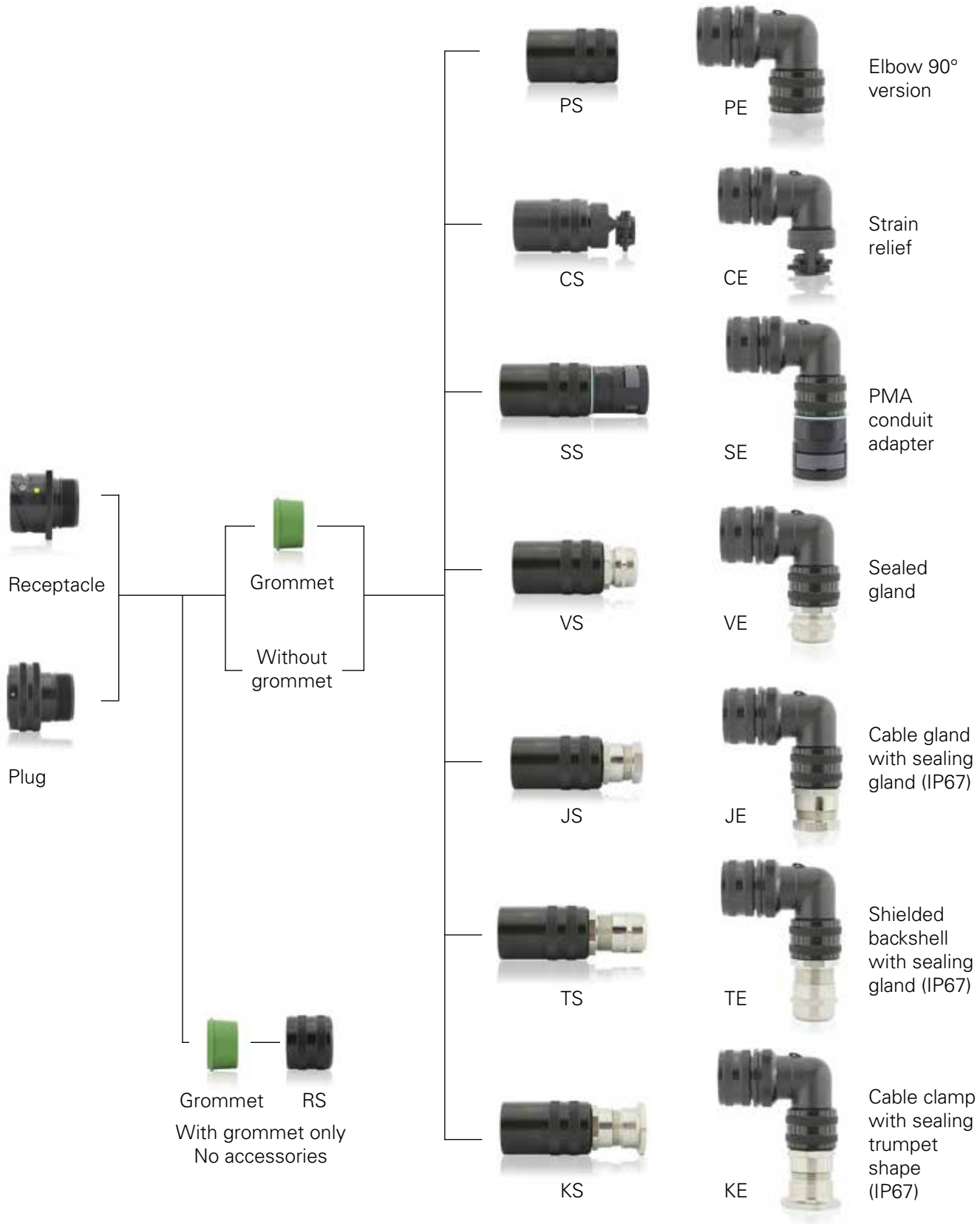

VGE1CS & VGE1CE

Backshell part numbers

	CS straight version		CE elbow 90° version	
Layout	**Without grommet**	**With grommet***	**Without grommet**	**With grommet***
14A6	VGE1CS140000	VGE1CS14A600M	-	-
	VGE1CS140000	VGE1CS14A600L		
14A10	VGE1CS140000	VGE1CS14A1000M	-	-
	VGE1CS140000	VGE1CS14A1000L	-	-
14R	VGE1CS140000	-	-	-
18-19	VGE1CS180000	VGE1CS181900M	VGE1CE180000	VGE1CE181900M
	VGE1CS180000	VGE1CS181900L	VGE1CE180000	VGE1CE181900L
18A1	VGE1CS180000	-	VGE1CE180000	-
20-15	VGE1CS200000	VGE1CS201500M	VGE1CE200000	VGE1CE201500M
	VGE1CS200000	VGE1CS201500L	VGE1CE200000	VGE1CE201500L
22-14	VGE1CS220000	VGE1CS221400M	VGE1CE220000	VGE1CE221400M
	VGE1CS220000	VGE1CS221400L	VGE1CE220000	VGE1CE221400L
24-10	VGE1CS240000	VGE1CS241000M	VGE1CE240000	VGE1CE241000M
	VGE1CS240000	VGE1CS241000L	VGE1CE240000	VGE1CE241000L
28-21	VGE1CS280000	VGE1CS282100M	VGE1CE280000	VGE1CE282100M
	VGE1CS280000	VGE1CS282100L	VGE1CE280000	VGE1CE282100L

(*): Termination M = Male grommet / Termination L = Female grommet

VGE1CS & VGE1CE

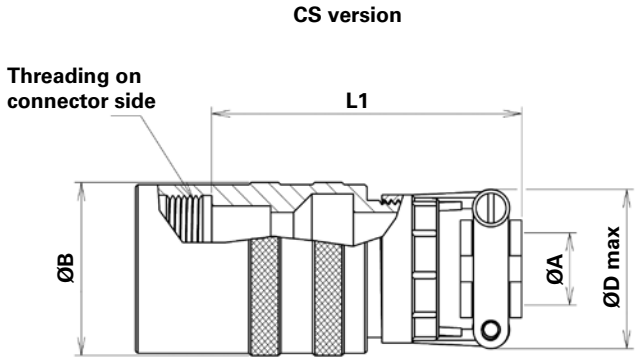

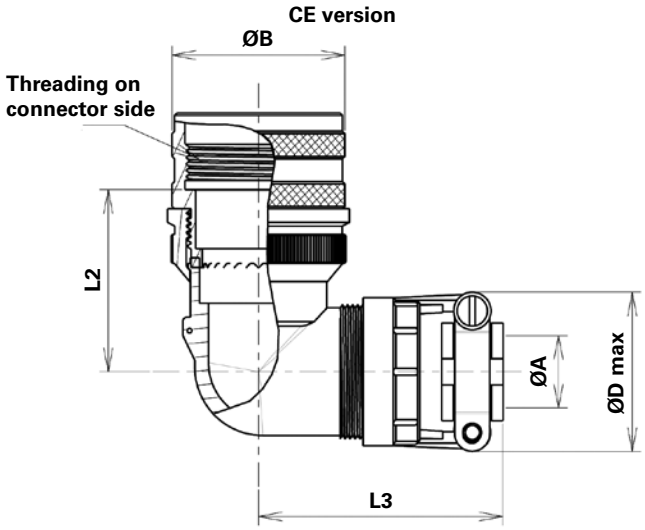

Backshell dimensions

Layout	ØA	ØB	ØD	L1	L2	L3
14A6 14A10 14R	7.9	23	24.5	58	-	-
18-19	12.7	30	29	72	44	59.2
18A1	12.7	30	29	72	44	59.2
20-15	15.87	33	34.8	72	43.5	60.4
22-14	15.87	38	34.8	69.4	43	57.8
24-10	19.05	38	39.5	69.4	45.5	62.8
28-21	20.32	46	41.8	69.4	41	57

For other outlet type, refer to Eaton

Note: max dimensions in mm
Dimensions are not contractual and may be subject to modifications

VGE1SS & VGE1SE

To be used with PMA conduit. For metallic threads or other conduits, refer to Eaton.

Backshell part numbers

	SS straight short version		SS straight long version		SE elbow 90° version	
Layout	**Without grommet**	**With grommet***	**Without grommet**	**With grommet***	**Without grommet**	**With grommet***
14A6	VGE1SS140000	VGE1SS14A600M	-	-	-	-
	VGE1SS140000	VGE1SS14A600L				
14A10	VGE1SS140000	VGE1SS14A1000M	-	-	-	-
	VGE1SS140000	VGE1SS14A1000L				
14R	VGE1SS140000	-	-	-	-	-
18-19	VGE1SS180000	VGE1SS181900M	VGE1SS180010	VGE1SS181910M	VGE1SE180000	VGE1SE181900M
	VGE1SS180000	VGE1SS181900L	VGE1SS180010	VGE1SS181910L		VGE1SE181900L
18A1	VGE1SS180000	-	VGE1SS180010	-	VGE1SE180000	-
20-15	VGE1SS200000	VGE1SS201500M	VGE1SS200010	VGE1SS201510M	VGE1SE200000	VGE1SE201500M
	VGE1SS200000	VGE1SS201500L	VGE1SS200010	VGE1SS201510L	VGE1SE200000	VGE1SE201500L
22-14	VGE1SS220000	VGE1SS221400M	VGE1SS220010	VGE1SS221410M	VGE1SE220000	VGE1SE221400M
	VGE1SS220000	VGE1SS221400L	VGE1SS220010	VGE1SS221410L	VGE1SE220000	VGE1SE221400L
24-10	VGE1SS240000	VGE1SS241000M	VGE1SS240010	VGE1SS241010M	VGE1SE240000	VGE1SE241000M
	VGE1SS240000	VGE1SS241000L	VGE1SS240010	VGE1SS241010L	VGE1SE240000	VGE1SE241000L
28-21	VGE1SS280000	VGE1SS282100M	VGE1SS280010	VGE1SS282110M	VGE1SE280000	VGE1SE282100M
	VGE1SS280000	VGE1SS282100L	VGE1SS280010	VGE1SS282110L	VGE1SE280000	VGE1SE282100L
32A13	VGE1SS320000	VGE1SS32A1300M	VGE1SS320010	VGE1SS32A1310M	VGE1SE320000	VGE1SE32A1300M
	VGE1SS320000	VGE1SS32A1300L	VGE1SS320010	VGE1SS32A1310L	VGE1SE320000	VGE1SE32A1300L
36A22	VGE1SS360000	VGE1SS36A2200M	VGE1SS360010	VGE1SS36A2210M	VGE1SE360000	VGE1SE36A2200M
	VGE1SS360000	VGE1SS36A2200L	VGE1SS360010	VGE1SS36A2210L	VGE1SE360000	VGE1SE36A2200L
40A35	VGE1SS400000	VGE1SS40A3500M	VGE1SS400010	VGE1SS40A3510M	VGE1SE400000	VGE1SE40A3500M
	VGE1SS400000	VGE1SS40A3500L	VGE1SS400010	VGE1SS40A3510L	VGE1SE400000	VGE1SE40A3500L
40A60	VGE1SS400000	VGE1SS40A6000M	VGE1SS400010	VGE1SS40A6010M	VGE1SE400000	VGE1SE40A6000M
	VGE1SS400000	VGE1SS40A6000L	VGE1SS400010	VGE1SS40A6010L	VGE1SE400000	VGE1SE40A6000L

(*): Termination M = Male grommet / Termination L = Female grommet

VGE1SS & VGE1SE

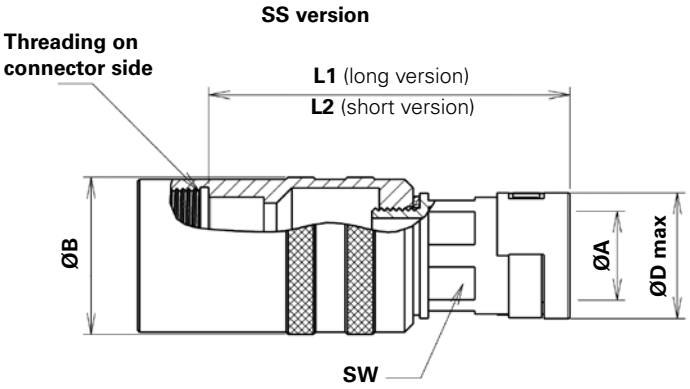

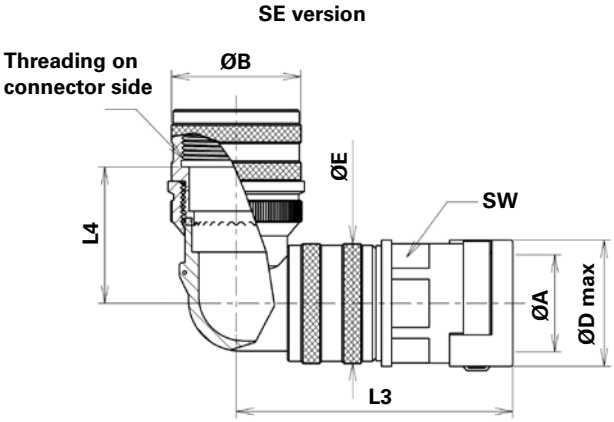

Backshell dimensions

Layout	ØA (conduit type)	ØB	ØD	ØE	SW	L1	L2	L3	L4
14A6 14A10 14R	PMA NW12	23	23.5	-	20	-	59	-	-
18-19	PMA NW17	30	30	30	26	84.1	69.1	78.5	44.7
18A1	PMA NW17	30	30	30	26	84.1	69.1	78.5	44.7
20-15	PMA NW17	33	30	34	26	84.1	69.1	80	44.8
22-14	PMA NW23	37	37	35	32	87.1	72.1	83	44.8
24-10	PMA NW23	40	37	40	32	87.1	72.1	88	47.1
28-21	PMA NW29	46	44	44.5	38	95.9	70.9	85.5	42.6
32A13	PMA NW29	52	44	52	38	85.9	70.9	98.5	53.5
36A22	PMA NW36	57	53	57	50	99.4	84.4	115	64.8
40A35	PMA NW48	63	65	63	65	93.4	78.4	115	55.7
40A60	PMA NW48	63	65	63	65	93.4	78.4	115	55.7

For other outlet type, refer to Eaton

Note: max dimensions in mm
Dimensions are not contractual and may be subject to modifications

VGE1JS & VGE1JE

Backshell part numbers

	JS straight short version		JS straight long version		JE elbow 90° version	
Layout	**Without grommet**	**With grommet***	**Without grommet**	**With grommet***	**Without grommet**	**With grommet***
18-19	VGE1JS180000	VGE1JS181900M	VGE1JS180010	VGE1JS181910M	VGE1JE180000	VGE1JE181900M
	VGE1JS180000	VGE1JS181900L	VGE1JS180010	VGE1JS181910L	VGE1JE180000	VGE1JE181900L
18A1	VGE1JS180000	-	VGE1JS180010	-	VGE1JE180000	-
20-15	VGE1JS200000	VGE1JS201500M	VGE1JS200010	VGE1JS201510M	VGE1JE200000	VGE1JE201500M
	VGE1JS200000	VGE1JS201500L	VGE1JS200010	VGE1JS201510L	VGE1JE200000	VGE1JE201500L
22-14	VGE1JS220000	VGE1JS221400M	VGE1JS220010	VGE1JS221410M	VGE1JE220000	VGE1JE221400M
	VGE1JS220000	VGE1JS221400L	VGE1JS220010	VGE1JS221410L	VGE1JE220000	VGE1JE221400L
24-10	VGE1JS240000	VGE1JS241000M	VGE1JS240010	VGE1JS241010M	VGE1JE240000	VGE1JE241000M
	VGE1JS240000	VGE1JS241000L	VGE1JS240010	VGE1JS241010L	VGE1JE240000	VGE1JE241000L
28-21	VGE1JS280000	VGE1JS282100M	VGE1JS280010	VGE1JS282110M	VGE1JE280000	VGE1JE282100M
	VGE1JS280000	VGE1JS282100L	VGE1JS280010	VGE1JS282110L	VGE1JE280000	VGE1JE282100L
32A13	VGE1JS320000	VGE1JS32A1300M	VGE1JS320010	VGE1JS32A1310M	VGE1JE320000	VGE1JE32A1300M
	VGE1JS320000	VGE1JS32A1300L	VGE1JS320010	VGE1JS32A1310L	VGE1JE320000	VGE1JE32A1300L
36A22	VGE1JS360000	VGE1JS36A2200M	VGE1JS360010	VGE1JS36A2210M	VGE1JE360000	VGE1JE36A2200M
	VGE1JS360000	VGE1JS36A2200L	VGE1JS360010	VGE1JS36A2210L	VGE1JE360000	VGE1JE36A2200L
40A35	VGE1JS400000	VGE1JS40A3500M	VGE1JS400010	VGE1JS40A3510M	VGE1JE400000	VGE1JE40A3500M
	VGE1JS400000	VGE1JS40A3500L	VGE1JS400010	VGE1JS40A3510L	VGE1JE400000	VGE1JE40A3500L
40A60	VGE1JS400000	VGE1JS40A6000M	VGE1JS400010	VGE1JS40A6010M	VGE1JE400000	VGE1JE40A6000M
	VGE1JS400000	VGE1JS40A6000L	VGE1JS400010	VGE1JS40A6010L	VGE1JE400000	VGE1JE40A6000L

(*) Termination M = Male grommet / Termination L = Female grommet

VGE1JS & VGE1JE

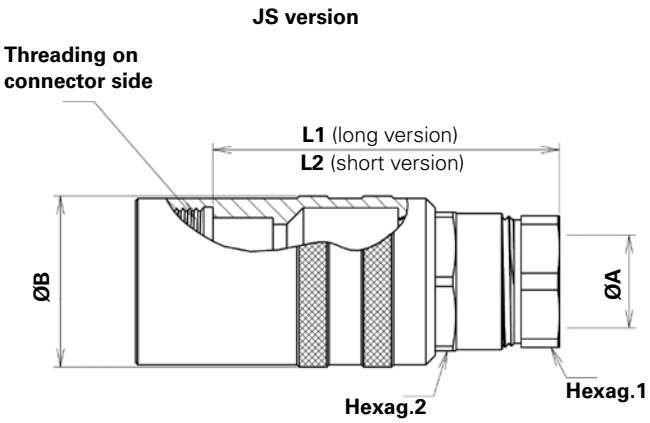

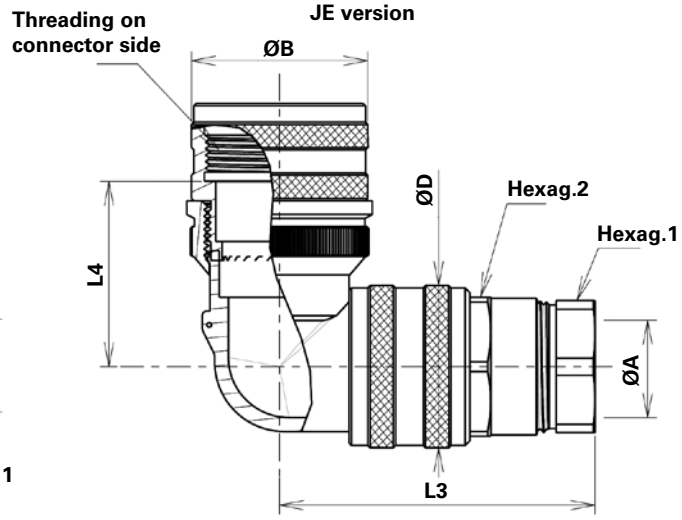

Backshell dimensions

Layout	ØA	ØB	ØD	Hexag.1	Hexag.2	L1	L2	L3	L4
18-19	7/12	30	30	20	22	71.6	56.6	65.2	44.7
18A1	7/12	30	30	20	22	71.6	56.6	65.2	44.7
20-15	9/14	33	34	22	24	71.6	56.6	66.4	44.8
22-14	10/18	37	35	28	30	79.6	64.6	74.4	44.8
24-10	10/18	40	40	28	30	79.6	64.6	79.4	47.1
28-21	14/24	46	44.5	38	40	88.9	63.9	76.9	42.6
32A13	14/24	52	52	38	40	78.9	63.9	89.9	53.5
36A22	22/30	57	57	48	50	84.9	69.9	96.9	64.8
40A35	25/35	63	63	55	58	92.4	77.4	106.7	55.7
40A60	25/35	63	63	55	58	92.4	77.4	106.7	55.7

For other outlet type, refer to Eaton

Note: max dimensions in mm
Dimensions are not contractual and may be subject to modifications

VGE1KS & VGE1KE

Backshell part numbers

	KS straight short version		KS straight long version		KE elbow 90° version	
Layout	**Without grommet**	**With grommet***	**Without grommet**	**With grommet***	**Without grommet**	**With grommet***
18-19	VGE1KS180000	VGE1KS181900M	VGE1KS180010	VGE1KS181910M	VGE1KE180000	VGE1KE181900M
		VGE1KS181900L		VGE1KS181910L		VGE1KE181900L
18A1	VGE1KS180000	-	VGE1KS180010	-	VGE1KE180000	-
20-15	VGE1KS200000	VGE1KS201500M	VGE1KS200010	VGE1KS201510M	VGE1KE200000	VGE1KE201500M
		VGE1KS201500L		VGE1KS201510L		VGE1KE201500L
22-14	VGE1KS220000	VGE1KS221400M	VGE1KS220010	VGE1KS221410M	VGE1KE220000	VGE1KE221400M
		VGE1KS221400L		VGE1KS221410L		VGE1KE221400L
24-10	VGE1KS240000	VGE1KS241000M	VGE1KS240010	VGE1KS241010M	VGE1KE240000	VGE1KE241000M
		VGE1KS241000L		VGE1KS241010L		VGE1KE241000L
28-21	VGE1KS280000	VGE1KS282100M	VGE1KS280010	VGE1KS282110M	VGE1KE280000	VGE1KE282100M
		VGE1KS282100L		VGE1KS282110L		VGE1KE282100L
32A13	VGE1KS320000	VGE1KS32A1300M	VGE1KS320010	VGE1KS32A1310M	VGE1KE320000	VGE1KE32A1300M
		VGE1KS32A1300L		VGE1KS32A1310L		VGE1KE32A1300L
36A22	VGE1KS360000	VGE1KS36A2200M	VGE1KS360010	VGE1KS36A2210M	VGE1KE360000	VGE1KE36A2200M
		VGE1KS36A2200L		VGE1KS36A2210L		VGE1KE36A2200L
40A35	VGE1KS400000	VGE1KS40A3500M	VGE1KS400010	VGE1KS40A3510M	VGE1KE400000	VGE1KE40A3500M
		VGE1KS40A3500L		VGE1KS40A3510L		VGE1KE40A3500L
40A60	VGE1KS400000	VGE1KS40A6000M	VGE1KS400010	VGE1KS40A6010M	VGE1KE400000	VGE1KE40A6000M
		VGE1KS40A6000L		VGE1KS40A6010L		VGE1KE40A6000L

(*) Termination M = Male grommet / Termination L = Female grommet

VGE1KS & VGE1KE

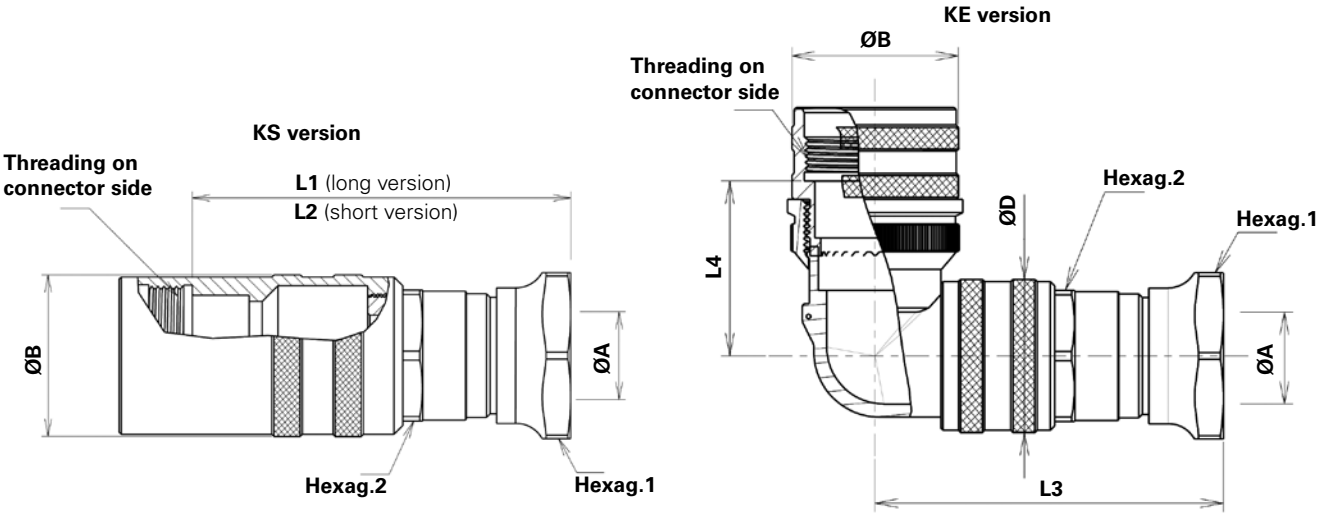

Backshell dimensions

Layout	ØA	ØB	ØD	Hexag.1	Hexag.2	L1	L2	L3	L4
18-19	7/12	30	30	28	22	78.6	63.6	72.2	44.7
18A1	7/12	30	30	28	22	78.6	63.6	72.2	44.7
20-15	9/14	33	34	30	24	80.1	65.1	74.9	44.8
22-14	10/18	37	35	38	30	87.1	72.1	81.9	44.8
24-10	10/18	40	40	38	30	87.1	72.1	86.9	47.1
28-21	14/24	46	44.5	50	40	102.4	77.4	90.4	42.6
32A13	14/24	52	52	50	40	92.4	77.4	103.4	53.5
36A22	22/30	57	57	54	50	98.9	83.9	110.9	64.8
40A35	25/35	63	63	60	58	104.4	89.4	118.7	55.7
40A60	25/35	63	63	60	58	104.4	89.4	118.7	55.7

For other outlet type, refer to Eaton

Note: max dimensions in mm
Dimensions are not contractual and may be subject to modifications

VGE1TS & VGE1TE

Backshell part numbers

	TS straight short version		TS straight long version		TE elbow 90° version	
Layout	**Without grommet**	**With grommet***	**Without grommet**	**With grommet***	**Without grommet**	**With grommet***
18-19	VGE1TS180000	VGE1TS181900M	VGE1TS180010	VGE1TS181910M	VGE1TE180000	VGE1TE181900M
	VGE1TS180000	VGE1TS181900L	VGE1TS180010	VGE1TS181910L	VGE1TE180000	VGE1TE181900L
18A1	VGE1TS180000	-	VGE1TS180010	-	VGE1TE180000	-
20-15	VGE1TS200000	VGE1TS201500M	VGE1TS200010	VGE1TS201510M	VGE1TE200000	VGE1TE201500M
	VGE1TS200000	VGE1TS201500L	VGE1TS200010	VGE1TS201510L	VGE1TE200000	VGE1TE201500L
22-14	VGE1TS220000	VGE1TS221400M	VGE1TS220010	VGE1TS221410M	VGE1TE220000	VGE1TE221400M
	VGE1TS220000	VGE1TS221400L	VGE1TS220010	VGE1TS221410L	VGE1TE220000	VGE1TE221400L
24-10	VGE1TS240000	VGE1TS241000M	VGE1TS240010	VGE1TS241010M	VGE1TE240000	VGE1TE241000M
	VGE1TS240000	VGE1TS241000L	VGE1TS240010	VGE1TS241010L	VGE1TE240000	VGE1TE241000L
28-21	VGE1TS280000	VGE1TS282100M	VGE1TS280010	VGE1TS282110M	VGE1TE280000	VGE1TE282100M
	VGE1TS280000	VGE1TS282100L	VGE1TS280010	VGE1TS282110L	VGE1TE280000	VGE1TE282100L
32A13	VGE1TS320000	VGE1TS32A1300M	VGE1TS320010	VGE1TS32A1310M	VGE1TE320000	VGE1TE32A1300M
	VGE1TS320000	VGE1TS32A1300L	VGE1TS320010	VGE1TS32A1310L	VGE1TE320000	VGE1TE32A1300L

(*) Termination M = Male grommet / Termination L = Female grommet

VGE1TS & VGE1TE

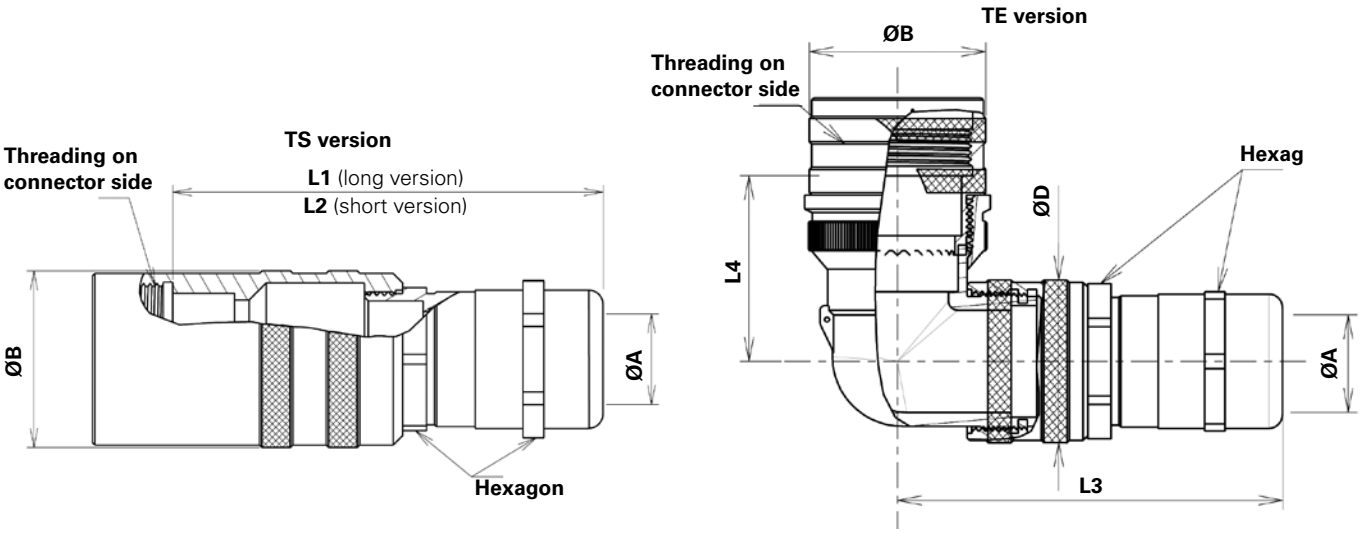

Backshell dimensions

Layout	ØA	ØB	ØD	Hexagon	L1	L2	L3	L4
18-19	8/12.5	30	30	22	82.1	67.1	75.7	44.7
18A1	8/12.5	30	30	22	82.1	67.1	75.7	44.7
20-15	10/14.5	33	34	24	82.1	67.1	76.9	44.8
22-14	13.5/18	37	35	30	91.6	76.6	86.4	44.8
24-10	13.5/18	40	40	30	91.6	76.6	91.4	47.1
28-21	17/24	46	44.5	40	109.4	84.4	97.4	42.6
32A13	17/24	52	52	40	99.4	84.4	110.4	53.5

For other outlet type, refer to Eaton

Note: max dimensions in mm
Dimensions are not contractual and may be subject to modifications

VGE1VS & VGE1VE

Backshell part numbers

	VS straight short version		VS straight long version		VE elbow 90° version	
Layout	**Without grommet**	**With grommet***	**Without grommet**	**With grommet***	**Without grommet**	**With grommet***
14A6	VGE1VS1400015	VGE1VS14A6015M	-	-	-	-
	VGE1VS1400015	VGE1VS14A6015L				
14A10	VGE1VS1400015	VGE1VS14A10015M	-	-	-	-
	VGE1VS1400015	VGE1VS14A10015L				
14R	VGE1VS1400015	-	-	-	-	-
18-19	VGE1VS180001	VGE1VS181901M	VGE1VS180011	VGE1VS181911M	VGE1VE180001	VGE1VE181901M
	VGE1VS180001	VGE1VS181901L	VGE1VS180011	VGE1VS181911L	VGE1VE180001	VGE1VE181901L
18A1	VGE1VS180001	-	VGE1VS180011	-	VGE1VE180001	-
20-15	VGE1VS200001	VGE1VS201501M	VGE1VS200011	VGE1VS201511M	VGE1VE200001	VGE1VE201501M
	VGE1VS200001	VGE1VS201501L	VGE1VS200011	VGE1VS201511L	VGE1VE200001	VGE1VE201501L
22-14	VGE1VS220001	VGE1VS221401M	VGE1VS220011	VGE1VS221411M	VGE1VE220001	VGE1VE221401M
	VGE1VS220001	VGE1VS221401L	VGE1VS220011	VGE1VS221411L	VGE1VE220001	VGE1VE221401L
24-10	VGE1VS240001	VGE1VS241001M	VGE1VS240011	VGE1VS241011M	VGE1VE240001	VGE1VE241001M
	VGE1VS240001	VGE1VS241001L	VGE1VS240011	VGE1VS241011L	VGE1VE240001	VGE1VE241001L
28-21	VGE1VS280001	VGE1VS282101M	VGE1VS280011	VGE1VS282111M	VGE1VE280001	VGE1VE282101M
	VGE1VS280001	VGE1VS282101L	VGE1VS280011	VGE1VS282111L	VGE1VE280001	VGE1VE282101L
32A13	VGE1VS320001	VGE1VS32A1301M	VGE1VS320011	VGE1VS32A1311M	VGE1VE320001	VGE1VE32A1301M
	VGE1VS320001	VGE1VS32A1301L	VGE1VS320011	VGE1VS32A1311L	VGE1VE320001	VGE1VE32A1301L

* Termination M = Male grommet / Termination L = Female grommet

VGE1VS & VGE1VE

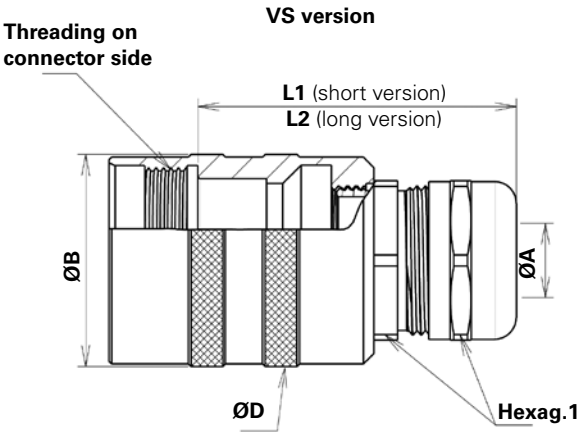

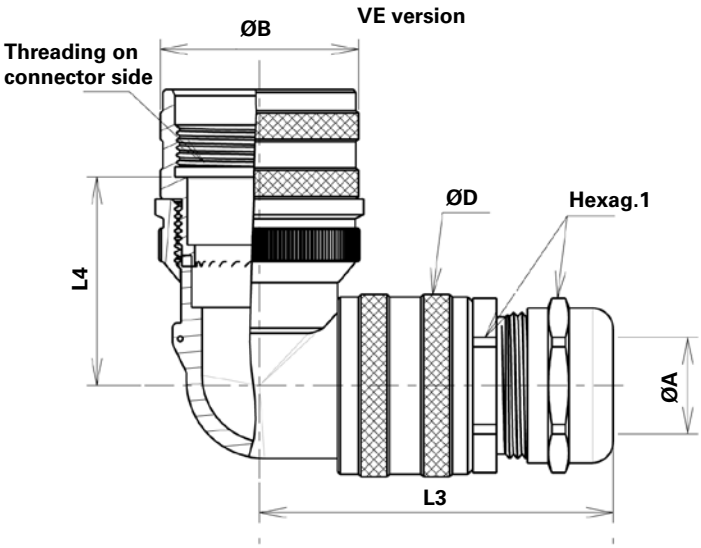

Backshell dimensions

Layout	ØA	ØB	ØD	L1	L2	L3	L4	Hexag.1
14A6 **14A10** **14R**	4/11	22	23	54	-	-	-	-
18-19	6/12.5	30	30	55.6	70.6	64	44.7	22
18A1	6/12.5	30	30	55.6	70.6	64	44.7	22
20-15	7/14.5	33	34	57.6	72.6	67.5	44.8	24
22-14	10/18	37	35	62.1	77.1	72	44.8	30
24-10	10/18	40	40	62.1	77.1	77	47.1	30
28-21	14/24	46	44.5	67.9	92.9	81	42.6	40
32A13	14/24	52	52	67.9	82.9	94	53.5	40

For other outlet type, refer to Eaton

Note: max dimensions in mm
Dimensions are not contractual and may be subject to modifications

VGE1RS

Backshell part numbers

Layout	RS backshell with grommet	Grommet type
14A6	VGE1RS14A600M	Male
	VGE1RS14A600L	Female
14A10	VGE1RS14A1000M	Male
	VGE1RS14A1000L	Female
18-19	VGE1RS181900M	Male
	VGE1RS181900L	Female
20-15	VGE1RS201500M	Male
	VGE1RS201500L	Female
22-14	VGE1RS221400M	Male
	VGE1RS221400L	Female
24-10	VGE1RS241000M	Male
	VGE1RS241000L	Female
28-21	VGE1RS282100M	Male
	VGE1RS282100L	Female
32A13	VGE1RS32A1300M	Male
	VGE1RS32A1300L	Female
36A22	VGE1RS36A2200M	Male
	VGE1RS36A2200L	Female
40A35	VGE1RS40A3500M	Male
	VGE1RS40A3500L	Female
40A60	VGE1RS40A6000M	Male
	VGE1RS40A6000L	Female

Backshell dimensions

Layout	ØA	L
14A6 **14A10**	23	16.5
18-19	30	17.2
20-15	33	17.2
22-14	37	17.2
24-10	42	17.2
28-21	46	16
32A13	52	16
36A22	52	16
40A35	57	16
40A60	57	16

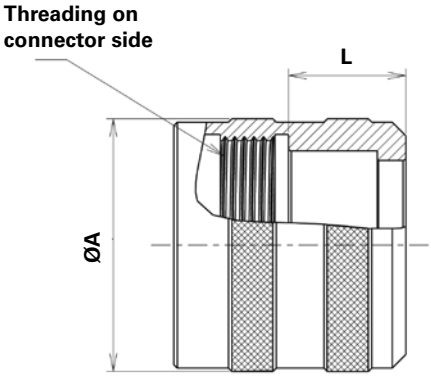

Note: max dimensions in mm
Dimensions are not contractual and may be subject to modifications

VGE1PS

Backshell part numbers

		PS straight short version			PS straight long version		
Layout	**Threading**	**Without grommet**	**Male grommet**	**Female grommet**	**Without grommet**	**Male grommet**	**Female grommet**
14A6	M16	VGE1PS140000	VGE1PS14A600M	VGE1PS14A600L	-	-	-
14A10	-	VGE1PS140000	VGE1PS14A1000M	VGE1PS14A1000L	-		
18-19	M16	VGE1PS1800012	VGE1PS1819012M	VGE1PS1819012L			
	M20	GE1PS180007	VGE1PS181907M	VGE1PS181907L	VGE1PS180017	VGE1PS181917M	VGE1PS181917L
	M25	VGE1PS180008	VGE1PS181908M	VGE1PS181908L	VGE1PS180018	VGE1PS181918M	VGE1PS181918L
	PG13	VGE1PS180009	VGE1PS181909M	VGE1PS181909L	VGE1PS180019	VGE1PS181919M	VGE1PS181919L
20-15	M25	VGE1PS200007	VGE1PS201507M	VGE1PS201507L	-	-	-
	M20	VGE1PS200008	VGE1PS201508M	VGE1PS201508L	-	-	-
22-14	M25	VGE1PS220007	VGE1PS221407M	VGE1PS221407L	VGE1PS220017	VGE1PS221417M	VGE1PS221417L
	M32	VGE1PS220008	VGE1PS221408M	VGE1PS221408L	VGE1PS220018	VGE1PS221418M	VGE1PS221418L
24-10	M25	VGE1PS240007	VGE1PS241007M	VGE1PS241007L	-	-	-
	M32	VGE1PS240008	VGE1PS241008M	VGE1PS241008L	-	-	-
28-21	M32	VGE1PS280007	VGE1PS282107M	VGE1PS282107L	VGE1PS280017	VGE1PS282117M	VGE1PS282117L
	M40	VGE1PS280008	VGE1PS282108M	VGE1PS282108L	VGE1PS280018	VGE1PS282118M	VGE1PS282118L
	PG29	VGE1PS280009	VGE1PS282109M	VGE1PS282109L	-	-	-
32A13	M32	VGE1PS320007	VGE1PS32A1307M	VGE1PS32A1307L	-	-	-
	M40	VGE1PS320008	VGE1PS32A1308M	VGE1PS32A1308L	-	-	-
36A22	M40	VGE1PS360008	VGE1PS36A2208M	VGE1PS36A2208L	-	-	-
40A35	M32	VGE1PS400007	VGE1PS40A3507M	VGE1PS40A3507L	VGE1PS400017	VGE1PS40A3517M	VGE1PS40A3517L
	M40	VGE1PS400008	VGE1PS40A3508M	VGE1PS40A3508L	VGE1PS400018	VGE1PS40A3518M	VGE1PS40A3518L
	M32	VGE1PS400000	-	-	VGE1PS400010	-	-
	PG42	-	-	-	VGE1PS400019	VGE1PS40A3519M	VGE1PS40A3519L
40A60	M32	VGE1PS400007	VGE1PS40A6007M	VGE1PS40A6007L	VGE1PS400017	VGE1PS40A6017M	VGE1PS40A6017L
	M40	VGE1PS400008	VGE1PS40A6008M	VGE1PS40A6008L	VGE1PS400018	VGE1PS40A6018M	VGE1PS40A6018L
	PG42	-	-	-	VGE1PS400019	VGE1PS40A6019M	VGE1PS40A6019L

Note: Packaging = individual plastic bag + individual label + consumables

VGE1PS

PS version

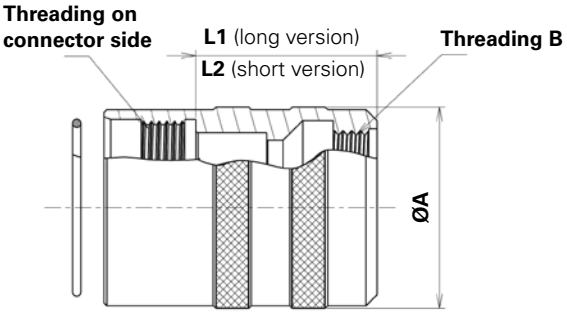

Backshell dimensions

	PS version			
Layout	**Threading B**	**ØA**	**L1**	**L2**
14A6	M16x1.5	23	-	29
14A10	M16x1.5	23	-	29
18-19	PG13	30	48.6	34
20-15	PG16	33	48.6	34
22-14	PG21	37	48.6	34
24-10	PG21	40	48.6	34
28-21	PG29	46	58	33
32A13	PG29	52	48	33
36A22	PG36	57	48	33
40A35	PG42	63	48	33
40A60	PG42	63	48	33

For other outlet type, refer to Eaton

Note: max dimensions in mm
Dimensions are not contractual and may be subject to modifications

VGE1 PS backshell with braid fixation accessory

Backshell part numbers

	PS straight short version		PS straight long version	
Layout	**Grommet male**	**Grommet female**	**Grommet male**	**Grommet female**
18-19	VGE1 PS 1819 06M	VGE1 PS 1819 06L	-	-
28-21	VGE1 PS 2821 06M	VGE1 PS 2821 06L	VGE1 PS 2821 16M	VGE1 PS 2821 16L

The braid fixation accessory can not be supplied separately

Connector dimensions

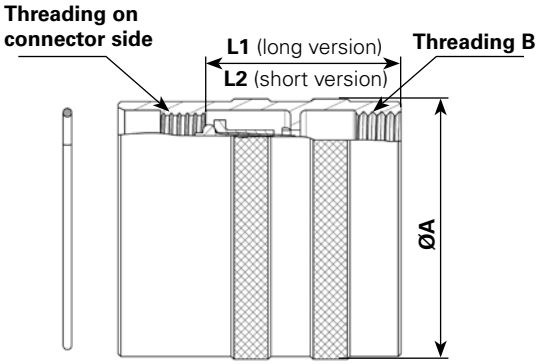

Layout	Threading B	ØA	L1	L2
18-19	M20	30	-	34.1
28-21	M40	46	53.6	34.1

Note: max dimensions in mm
Dimensions are not contractual and may be subject to modifications

VGE1PE

Backshell part numbers

Layout	Threading	PE elbow 90° version Without grommet	Male grommet	Female grommet
1819	M25	VGE1PE180009	VGE1PE181909M	VGE1PE181909L
20-15	M25	VGE1PE200009	VGE1PE201509M	VGE1PE201509L
22-14	M25	VGE1PE220001	VGE1PE221401M	VGE1PE221401L
22-14	M32	VGE1PE220009	VGE1PE221409M	VGE1PE221409L
28-21	M32	VGE1PE280009	VGE1PE282109M	VGE1PE282109L
36A22	M32	VGE1PE360009		
40A35	M32	VGE1PE400009	VGE1PE40A3509M	VGE1PE40A3509L
40A60	M32	VGE1PE400009	VGE1PE40A6009M	VGE1PE40A6009L

Note: Packaging = individual plastic bag + individual label + consumables.

Connector dimensions

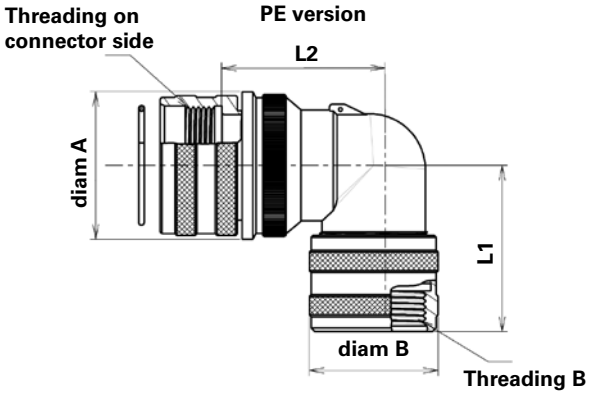

Layout	PE version Threading B	DiamA	DiamB	L1 Max	L2 Max	Mass (without grommet)
18-19	M25	34.2	31	44.9	45.2	70
18A1	M25	34.2	31	44.9	45.2	70
20-15	M25	37.4	35	44	44.7	90
22-14	M25	38	35	53	45	
22-14	M32	40.5	40	48.2	45.2	100
28-21	M32	50.1	45.5	50.2	54.4	115
36A22	M32	58	58	59.9	66.2	215
40A35	M32	69.2	64	64.3	56.2	270
40A60	M32	69.2	64	64.3	56.2	270

For other outlet type, refer to Eaton

Note: max dimensions in mm
Dimensions are not contractual and may be subject to modifications

Grommet part numbers

Layout	Type of grommet	Part numbers	Ø Wire insulator Mini	Maxi
14A6	Male	**VGE1M14A600**	1.2	2.95
	Female	**VGE1L14A600**	1.2	2.95
14A10	Male	**VGE1M14A1000**	1.15	1.8
	Female	**VGE1L14A1000**	1.15	1.8
18-19	Male	**VGE1M181900**	1.2	2.95
	Female	**VGE1L181900**	1.2	2.95
20-15	Male	**VGE1M201500**	1.5	3.6
	Female	**VGE1L201500**	1.5	3.6
22-14	Male	**VGE1M221400**	1.2	2.95
	Female	**VGE1L221400**	1.2	2.95
24-10	Male	**VGE1M241000**	4.2	6.2
	Female	**VGE1L241000**	4.2	6.2
28-21	Male	**VGE1M282100**	1.2	2.95
	Female	**VGE1L282100**	1.2	2.95
32A13	Male	**VGE1M32A1300**	1.8	3.6
	Female	**VGE1L32A1300**	1.8	3.6
36A22	Male	**VGE1M36A2200**	2.4	3.6
	Female	**VGE1L36A2200**	2.4	3.6
40A35	Male	**VGE1M40A3500**	2.4	3.6
	Female	**VGE1L40A3500**	2.4	3.6
40A60	Male	**VGE1M40A6000**	2	2.95
	Female	**VGE1L40A6000**	2	2.95

Grommet filler plug part numbers

Contact size	Part numbers	Color
#20	**8500-4144**	Red
#16	**8500-479**	Blue
#12	**8500-479**	Blue
#8	**SB0834**	Red

Note: max dimensions in mm
Dimensions are not contractual and may be subject to modifications

Metallic caps IP67 for VGE1 part numbers

Shell size	Cap for receptacle	Cap for plug
18	VGE1E18	VGE1F18
20	VGE1E20	VGE1F20
22	VGE1E22	VGE1F22
24	VGE1E24	VGE1F24
28	VGE1E28	VGE1F28
32	VGE1E32	VGE1F32
36	VGE1E36	VGE1F36
40	VGE1E40	VGE1F40

Metallic caps IP 67 for FER1 part numbers

Shell size	Cap for receptacle
18	FER1 E 18
22	FER1 E 22
28	FER1 E 28

Panel gasket for VGE1 & FER1 receptacles

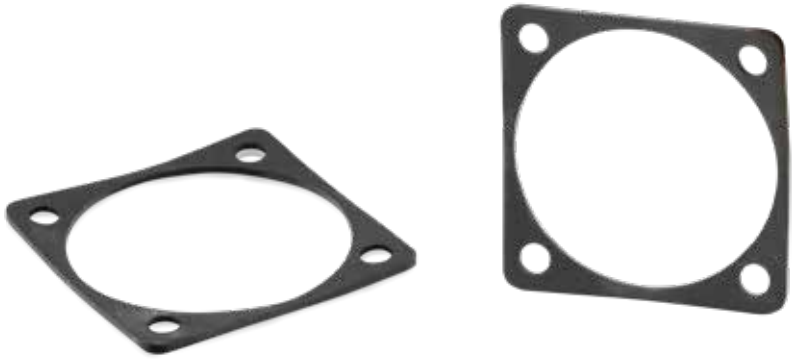

Part numbers & dimensions

	Part numbers		Dimensions			
Shell size	**Non conductive**	**Conductive**	**A**	**B**	**Ø C**	**Ø D**
14	**VGE1G14**	**VGE1G14A**	30	23	24.7	4.4
18	**VGE1G18**	**VGE1G18A**	35	27	30.8	4.3
20	**VGE1G20**	**VGE1G20A**	38	29.4	34.2	4.3
22	**VGE1G22**	**VGE1G22A**	41	31.8	37.4	4.3
24	**VGE1G24**	**VGE1G24A**	44.5	34.9	40.9	4.3
28	**VGE1G28**	**VGE1G28A**	50.8	39.7	46.7	5.2
32	**VGE1G32**	**VGE1G32A**	57	44.5	53.4	5.2
36	**VGE1G36**	**VGE1G36A**	63.5	49.2	59.6	5.2
40	**VGE1G40**	**VGE1G40A**	69.9	55.5	65.5	5.2

Panel gasket (not conductive)

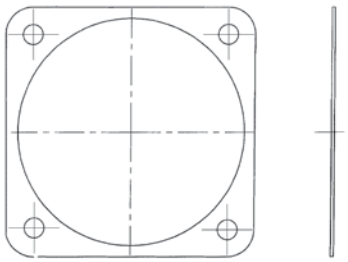

Panel gasket (conductive)

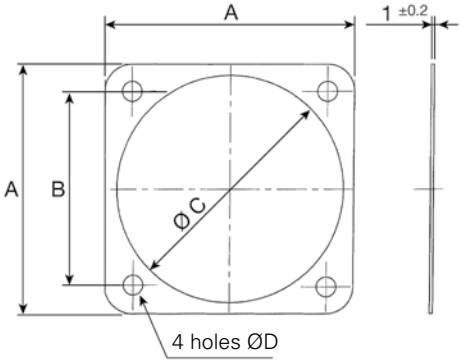

Note: max dimensions in mm
Dimensions are not contractual and may be subject to modifications

Fixing plate for VGE1 & FER1 receptacles

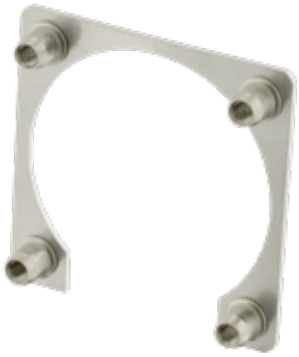

Part numbers & dimensions

		Dimensions (mm)					
Shell size	**Part numbers**	**A**	**B**	**Ø C**	**D**	**E**	**Thread F**
14	**VGE1CP14**	29.5	23	24.6	15	7.7	M3
18	**VGE1CP18**	34.2	27	30.3	19.7	7.7	M3
20	**VGE1CP20**	38.1	28.4	33.3	22	7.7	M3
22	**VGE1CP22**	40.5	31.8	36.5	23	7.7	M3
24	**VGE1CP24**	44	34.9	38.1	25.8	7.7	M3
28	**VGE1CP28**	50.8	39.7	46.4	28.6	7.7	M3
32	**VGE1CP32**	58.7	44.5	52.6	30.2	8.5	M4
36	**VGE1CP36**	63.5	49.2	58.8	34.9	8.5	M4
40	**VGE1CP40**	74.2	55.5	68.1	38.1	8.5	M4

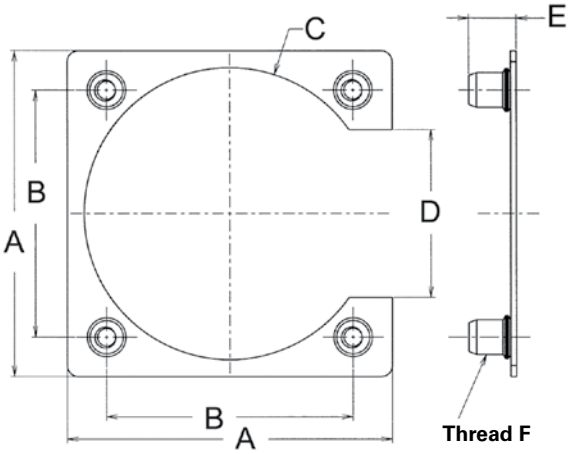

Note: max dimensions in mm
Dimensions are not contractual and may be subject to modifications

Contact crimping instruction

Wire stripping

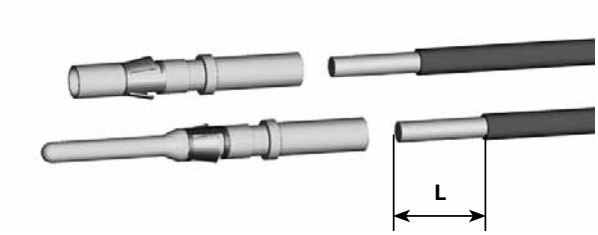

Contact type & size	Part numbers Male	Female	Stripping length (L)
Contact #20	**RM24W3K**	**RC24W3K**	4.8 mm
	RM20W3K	**RC20W3K**	4.8 mm
	RM18W3K	**RC18W3K**	4.8 mm
Contact #16	**RM28M1***	**RC28M1***	4.8 mm
	RM24M9*	**RC24M9***	4.8 mm
	RM20M12*	**RC20M12***	4.8 mm
	RM16M23*	**RC16M23***	7.1 mm
	RM14M30*	**RC14M30***	7.1 mm
Contact #12	**82911459N***	**82911458***	7 mm to 8 mm
	82911461N*	**82911460***	7 mm to 8 mm
	82911463N*	**82911462***	7 mm to 8 mm
	82911465N*	**82911464***	7 mm to 8 mm
Contact #8	**82913601***	**82913600***	6.5 mm to 7.5 mm
	82913603*	**82913602***	6.5 mm to 7.5 mm
	82913605*	**82913604***	6.5 mm to 7.5 mm
	82913607*	**82913606***	6.5 mm to 7.5 mm

Tooling

Contact size #	mm	Wire size AWG	mm²	Part numbers		Tool	Locator	Tool selector
#20	1.0	26-24	0.13-0.20	RM24W3K	RC24W3K	MH860 (M22520/7-01)	MH86301	6/7
	1.0	22-20	0.32-0.52	RM20W3K	RC20W3K	MH860 (M22520/7-01)	MH86301	6/7
	1.0	20-18	0.50-0.93	RM18W3K	RC18W3K	MH860 (M22520/7-01)	MH86301	6/7
#16	1.6	30-28	0.05-0.08	RM28M1*	RC28M1*	MH860 (M22520/7-01)	MH86164G	4/6
	1.6	26-24	0.13-0.2	RM24M9*	RC24M9*	MH860 (M22520/7-01)	MH86164G	5/6
	1.6	22-20	0.32-0.52	RM20M12*	RC20M12*	MH860 (M22520/7-01)	MH86164G	5/7
	1.6	20-16	0.5-1.5	RM16M23*	RC16M23*	MH860 (M22520/7-01)	MH86164G	6/9
	1.6	16-14	1.5-2.5	RM14M30*	RC14M30*	AF8 (M22520/1-01)	TP1142	8
#12	2.4	20	0.5	82911459N*	82911458*	M317	VGE10077A	-
	2.4	18	0.75-1.0	82911461N*	82911460*	M317	VGE10077A	-
	2.4	16	1.5	82911463N*	82911462*	M317	VGE10077A	-
	2.4	14	2.5	82911465N*	82911464*	M317	VGE10077A	-
#8	3.6	16	1.5	82913601*	82913600*	M317	VGE10078A	-
	3.6	14	2.5	82913603*	8291 3602*	M317	VGE10078A	-
	3.6	12	4	82913605*	82913604*	M317	VGE10078A	-
	3.6	10	6	82913607*	82913606*	M317	VGE10078A	-

(*) Plating code see **Page 25**

Note: max dimensions in mm
Dimensions are not contractual and may be subject to modifications

Contact crimp tooling

Tooling

Contact removal

Tooling

Contact size	Extractor
#20	RX20D44
#16	RX2025GE1
#12	5106.021.09.24
#8	5106.021.09.36
Quadrax	VGE1-0324A

How to use tool RX2025GE1:

A - When setting up in the cell, keep the tool firmly by the hexagonal metallic part and insert tool in cavity.

B - Push the tool by the handle to extract the contact.

Extraction:

Place the tool into the cavity from front the face of the connector, push on the handle and remove the contact.

Contact mounting

Without grommet

A - Manually place the contacts in the cavity and push until the mechanical stop is reached. Operation control: pull manually with a little effort and the contact should not withdraw.

B - It is not mandatory to wire all cavities.

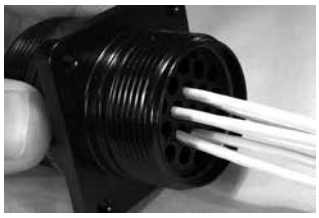

With grommet

A - For grommet mounting, insert the three insulator pins with grommet's hole.

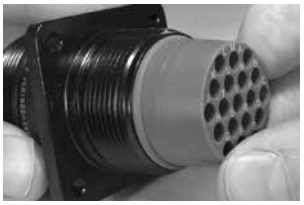

B - Manually place the contacts in the cavity and push until the mechanical stop is reached. Operation control: pull manually with a little effort and the contact should not withdraw.

C - It is mandatory to wire all cavities.

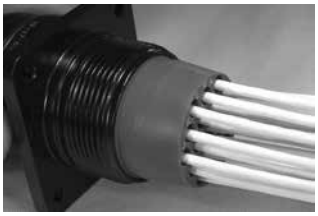

D - If a cavity is empty, it is mandatory to use a grommet filler plug.

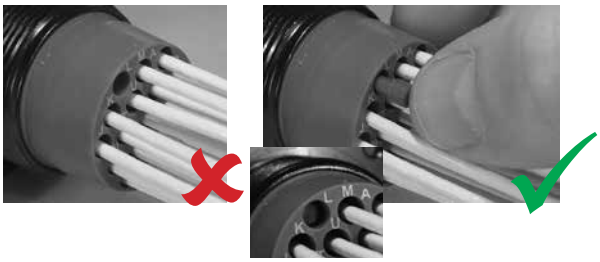

E - Place the compression ring over the grommet.

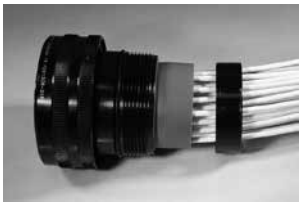

Cabling with backshell

With grommet

A - Pass the wires through the backshells/accessories.

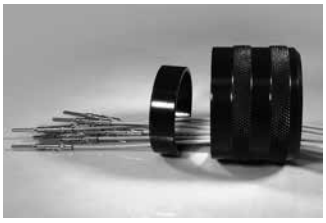

B - On sealed version, mount the O-ring on the groove's plug.

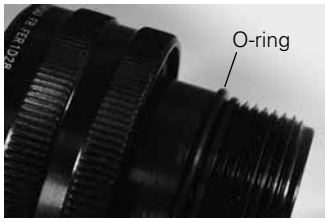

C - For contact mounting, place the grommet in the rear connector face and push each contact in the insulator's hole.

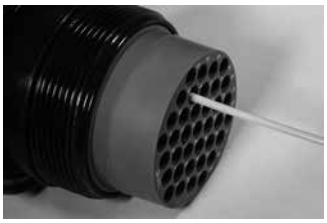

D - Place the conical ring on the grommet.

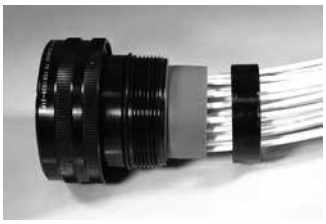

E - Screw the adapter until you feel the back stop.

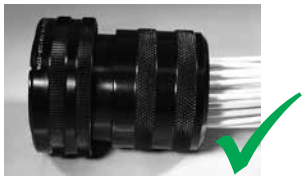

Backshell mounting sequence and coupling torque

	Shell		Recommended torque
Adapter/connector	T 14		8 Nm
	Other size		10 Nm
Reductor/adapter	40		10 Nm
Backshell/adapter or Backshell/reductor	CS	T 14	4 Nm
	PS	T 40	10 Nm
	SS (PMA)	T 22	5 Nm
	VS	All	10 Nm

Modular gasket for backshells JS, JE, KS & KE

A - Use a screwdriver to separate the packing ring from the cap.

B - Turn the packing rings around the screwdriver.

C - Remove the rest of the cap by hand.

D - Complete.

How to harness a shielded cable

Method A: braid fixed with TS-type backshell

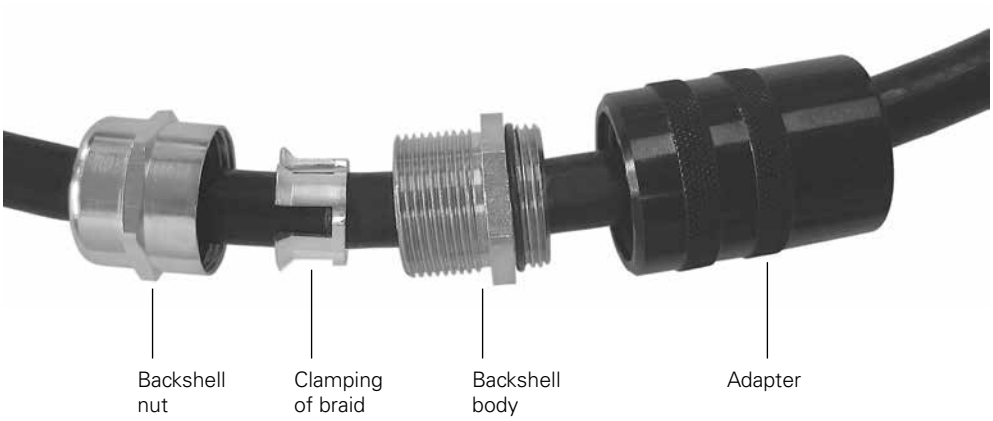

Example 1:
Cable diameter = 13.5 to18 mm, braid diameter > 13.5 mm

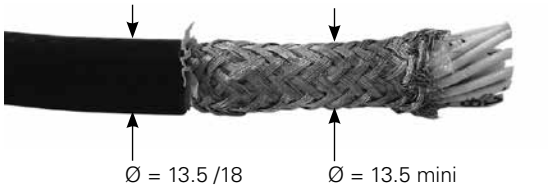

A - Strip the cable and adjust the braid length.

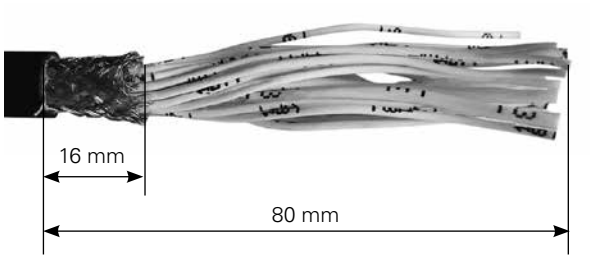

B - Strip wires, crimp and mount contacts.

Example 2:
Cable diameter = 15±1 mm, braid diameter < 13.5 mm

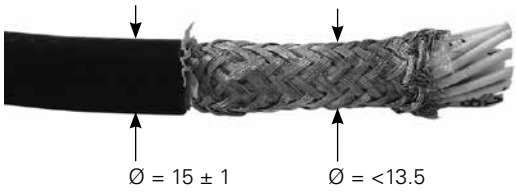

A - Turn the shielding on the sheath.

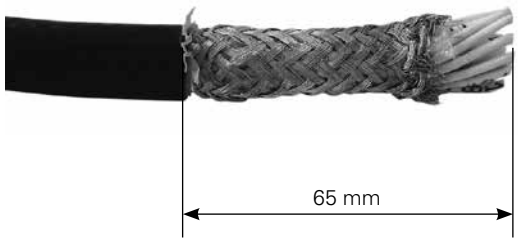

B - Strip wires, crimp and mount contacts.

Example 1:
Cable diameter = 13.5 to18 mm, braid diameter > 13.5 mm

C - Thread accessories:
• Adapter / plug body or receptacle: tightening torque = 10 Nm

• Backshell body / adapter: tightening torque = 10 Nm

D - Slip the clamping of braid inside the backshell's body.

E - Thread the backshell nut / backshell body:
• Tightening torque = 7 Nm

Warning: During the clamping of part, always support the cable to avoid rotation.

Example 2:
Cable diameter = 15±1 mm, braid diameter < 13.5 mm

C - Thread accessories:
• Adapter / plug body or receptacle: tightening torque = 10 Nm

• Backshell body / adapter: tightening torque = 10 Nm

D - Slip the clamping of braid inside the backshell's body.

• Cut the excess of the braid.

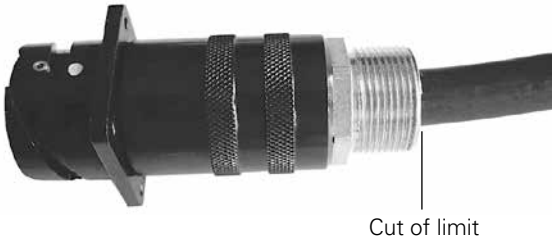

E - Thread the backshell nut / backshell body:
• Tightening torque = 7 Nm

Warning: During the clamping of part, always support the cable to avoid rotation.

How to harness a shielded cable

Method B: braid fixed on the conic ring

A - Before each operation:
Pass on the cable or bundle of conductor in the following order: (1) sealing gland backshell, (2) adapter and (3) conical ring.

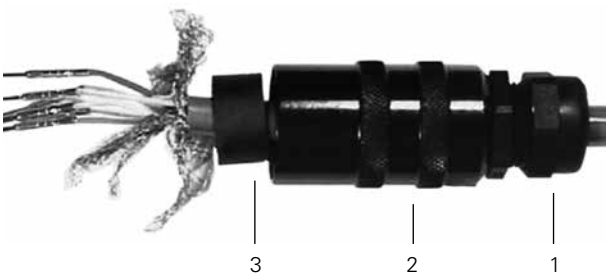

B - Pass the contacts through the grommet (4).

C - Slide the grommet onto the cable and insert the contacts into the connector.

D - Place the grommet on the insulator of the connector.

E - Fold the individual braid or braids on the grommet.

F - Put the external braid on the grommet.

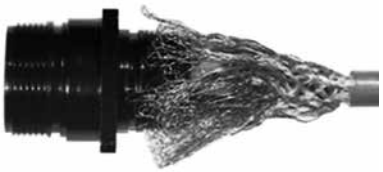

G - Fix the braids with the conical ring.

H - Adjust the length of the braids.

I - Secure the braids with the conical ring.

J - Screw the adapter (2) and secure the cable by tightening the sealing gland backshell (1).

Quadrax crimping instructions

Tooling

M22520 1-02

Y116

M22520/5-01

M22520/1-01 or AF8

Cabling process

A - Cable, cable insulator, ferrule position may vary depending on cable dimension. For detail and strip length, please refer to Eaton.

Align contacts crimping as shown.

Contact mounting on insulator as shown.

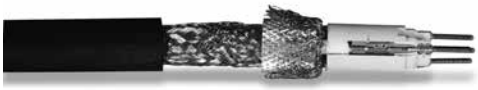

B - Place braid around ferrule.

Mount insulator in external contact cell, crimp the contact, cut excess of braid.

Backshells exploded views

Backnut (type RS)

Adapter

Cable clamp (type CS)

Conduit backshell (type SS)

Cable clamp with sealing gland (type JS)

Cable clamp with sealing gland and trumpet shape (type KS)

Cable clamp with sealing gland for shielding (type TS)

PS backshell with braid fixation accessory

For more information, contact us:
Eaton.com/interconnect-support

Powering Business Worldwide

© 2024 Eaton
All Rights Reserved
Document No. TF 700-33
February 2024

Eaton is a registered trademark.

All other trademarks are property of
their respective owners.