Accessories – coding system

Identification	Part number	Panel thickness	Dimensions in mm
Coding[1]			
Female	09 67 002 9121 xx 1	2.40 - 2.60 mm[3]	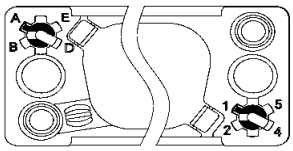
	09 67 002 9121 xx 2	2.00 - 2.40 mm	
	09 67 002 9121 xx 3	1.20 - 2.00 mm	
	09 67 002 9121 xx 4	0.80 - 1.20 mm	
Male	09 67 002 9122 xx 1	2.40 - 2.60 mm[3]	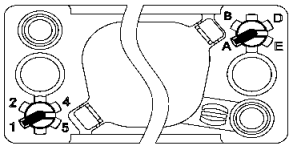
	09 67 002 9122 xx 2	2.00 - 2.40 mm	
	09 67 002 9122 xx 3	1.20 - 2.00 mm	
	09 67 002 9122 xx 4	0.80 - 1.20 mm	
Insert digits for coding configuration, e. g. "C3"		36 coding configurations[2]	

A1	B1	C1	D1	E1	F1
A2	**B2**	C2	D2	E2	F2
A3	B3	**C3**	D3	E3	F3
A4	B4	C4	D4	E4	**F4**
A5	B5	C5	D5	**E5**	F5
A6	B6	C6	**D6**	E6	F6

Depending on the panel thickness the suitable coding needs to be selected.

Female screw lock

for angled PCB connectors[3]

Thread inner	Thread outer	Part number	Panel thickness
4 - 40 UNC	4 - 40 UNC	09 67 002 9123[4]	2.00 - 2.60 mm
4 - 40 UNC	M3	09 67 002 9124	
M3	4 - 40 UNC	09 67 002 9125	
M3	M3	09 67 002 9126	
4 - 40 UNC	4 - 40 UNC	09 67 002 9129	1.20 - 2.00 mm
4 - 40 UNC	M3	09 67 002 9130	
M3	4 - 40 UNC	09 67 002 9131	
M3	M3	09 67 002 9132	
4 - 40 UNC	4 - 40 UNC	09 67 002 9133	0.80 - 1.20 mm
4 - 40 UNC	M3	09 67 002 9134	
M3	4 - 40 UNC	09 67 002 9135	
M3	M3	09 67 002 9136	

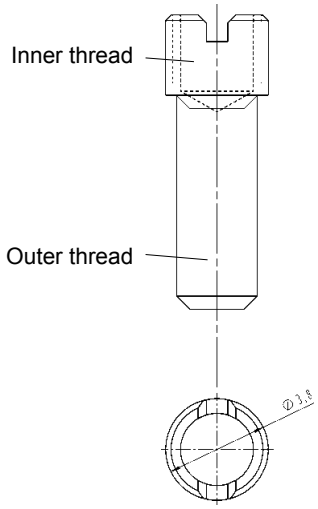

9 pole InduCom top entry hood for coding

61 03 001 . 010 123

Please insert digit for screw option

Hexagonal screw, thread M3 with captive washer ▶ 1

Hexagonal screw, thread 4-40 UNC with captive washer ▶ 2

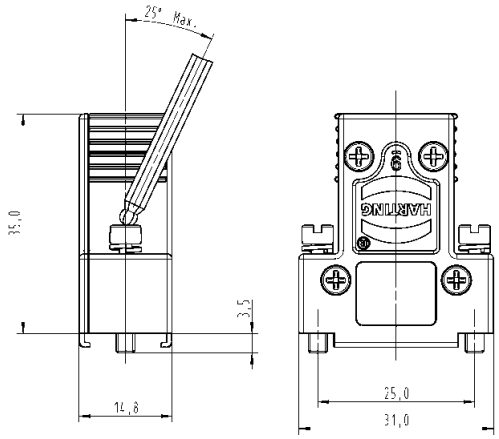

[1] MOQ = 50 pieces
[2] Stock items (standard versions) in bold type
[3] Female screw lock for straight PCB connectors on request
[4] Standard versions