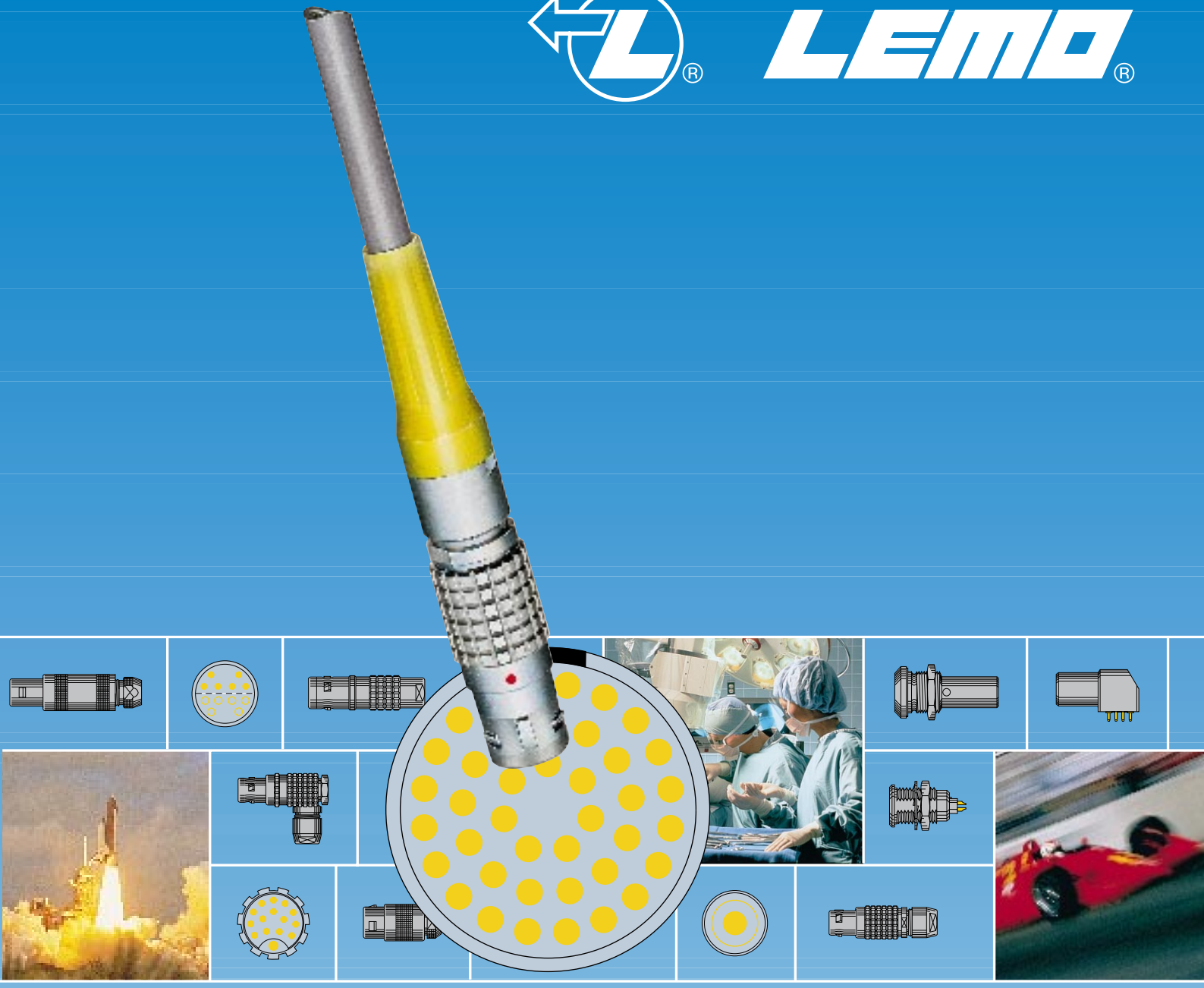

Unipole & Multipole Connectors

2

Dear Customers,

For more than 50 years the LEMO Group has been dedicated to bringing technical excellence to connection technology. Our range of models, numbering more than 55'000, are used in a multitude of applications. From medical devices to satellites, from oil exploration to precision measurement, engineers turn to LEMO to solve their most demanding connection needs. This catalogue documents a multitude of different product references… but the most important thing about LEMO is not printed on the page: it is the knowledge and expertise that is required to design and manufacture the world's best connectors.

At LEMO, all we do is connectors. Starting with raw materials and using our own factories, we control each step in the manufacturing process in order to guarantee quality at every level. We use only machined contacts, because only machining will provide the tight tolerances and high quality surface finish we require. Our commitment to quality is your guarantee of reliability. In the case you don't find exactly the product you require, don't despair ! Our engineers will work with you to design a product customized for your application. Our philosophy is to develop exactly what the application requires; our customers are the force that drives LEMO's engineers to develop new and useful products.

I hope this catalogue becomes a useful reference for all of the engineers, scientists, designers and inventors that regularly call on us for excellence in connection solutions. All of us at LEMO look forward to developing new models for use in tomorrow's machines, systems, and devices.

Alexandre Pesci
Corporate CEO
LEMO SA

Certified Quality System
SQS
ISO 9001
Reg. No. 10472 - 03

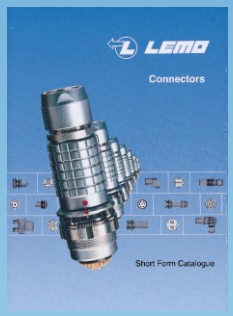

Short Form
Catalogue

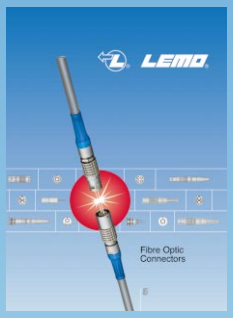

Fiber Optic
Connectors

Audio-Vidéo
Catalogue

1 Coaxial Series 00
Connectors

© 2000 Reproduction or use of editorial and//or pictorial content without express permission is strictly prohibited.
LEMO SA reserves the right to modify and//or improve product specifications at any time without notification.

Table of Contents

General Production Programme ..... **page 3**
Main Characteristics and Types **3**
Series and Types **4**
LEMO's Push-Pull Self-Latching Connection System **5**
Unipole and Multipole Connectors Production Programme **5**
Series and Contact configuration **6**
Introduction **7**

General Characteristics .....
Selection of watertight connectors 8
IP68 watertight assembly, Definition of degree of protection (IP code) 8
Selection of contact types (solder, crimp, print) 9
Acceptable cable diameters 10
Part Numbering System 11

B Series .....
Interconnections 15
Model Description 16
Part Section Showing Internal Components 17
Technical Characteristics 17
Available Models (series and type) 17
Alignment Key and Polarized Keying System 18
Part Number Example 19
Models - Series 20

K Series .....
Interconnections 41
Model Description, Part Section Showing Internal Components 42
Technical Characteristics 42
Available Models (series and type) 43
Alignment Key and Polarized Keying System 43
Part Number Example 44
Models - Series 45

Type (B and K series) 55
Housings, Insulators, Contacts (B and K series) 60
Collets (B and K series) 61
Variant (B and K series) 66

S Series .....
Interconnections 69
Model Description, Part Section Showing Internal Components 70
Technical Characteristics 70
Available Models (series and type) 71
Part Number Example 72
Models - Series 73

E Series .....
Interconnections 91
Model Description 91
Part Section Showing Internal Components 92
Technical Characteristics 92
Available Models (series and type) 92
Part Number Example 93
Models - Series 94

Type (S and E series) 103
Housings, Insulators, Contacts (S and E series) 111
Contact configuration for RMA, RAD and SWH fixed couplers 112
Collets (S and E series) 113
Variant (S and E series) 124

F Series .....
Interconnections, Model Description and Part Section Showing Internal Components 127
Technical Characteristics 128
Available Models (series and type) 128
Polarized Keying System 128
Part Number Example 129
Models - Series 130
Type 133
Accessories 134
Tooling 136
Panel cut-outs 138

Table of Contents

2C Series
Interconnections, Model Description and Part Section Showing Internal Components 143
Technical Characteristics 143
Part Number Example 144
Models - Series 145
Type, Housings, Contact 148
Collets, Variant 149
Accessories and Tooling 149
Panel cut-outs 150

2G Series
Interconnections, Model Description and Part Section Showing Internal Components 151
Technical Characteristics 151
Part Number Example 152
Models - Series 153
Type, Housings, Contact 154
Collets, Accessories 155
Tooling, Panel cut-outs 156

1D Series
Interconnections, Model Description and Part Section Showing Internal Components 159
Technical Characteristics 159
Part Number Example 160
Models - Series 161
Type, Collets, Variant 163
Accessories and Tooling 164
Panel cut-outs 164

Patch Panels
Patch Panel for audio application 165

Accessories
Insulators for crimp contacts 169
Crimp contacts 170
Caps 171
Bend relief 175
Insulating washers and double panel washers 178
Locking washers, tapered washers and nuts 179
Earthing washer and lead-through with cable collet 181

Tooling
Spanners 183
Assembly tools, pliers for assembling plugs, taps 185
Manual and pneumatic crimping tools, positioners 186
Extraction tools 188

Panel Cut-Outs
B and S series 189
K and E series 190

PCB Drilling Pattern
Fixed socket with straight print contact (B and K series) 191
Length of straight print contacts (B and K series) 192
Fixed socket for printed circuit (B series) 193
Fixed socket with elbow print contact (B and K series) 193
Elbow socket (90°) for printed circuit (B series) 194
Fixed socket with straight print contact (S and E series) 194
Length of straight print contacts (S and E series) 195
Elbow socket (90°) for printed circuit (S series) 195
Fixed socket with elbow print contact (S and E series) 196

Technical Characteristics
Outer shell 197
Insulator 201
Electrical contact 202
Test voltage, rated current 204
Cable fixing 205
Maximum collet nut tightening torque 208
Technical tables 209

General Production Programme

Connectors

- Unipole from 2 to 150 Amps
  Coaxial 50 and 75 Ω
  Coaxial 50 Ω (NIM-CAMAC)
  Coaxial 50 Ω for frequency → 12 GHz
  Multicoaxial 50 and 75 Ω
- Multipole from 2 to 106 contacts
  High Voltage 3, 5, 8, 10, 15, 30 and 50 kV cc
  Multi High Voltage 3, 5, and 10 kV cc
  Triaxial 50 and 75 Ω
- Quadrax
  Mixed: High Voltage (HV) + Low Voltage (LV)
  Mixed: Coax + LV
  Mixed: Triax + LV
  Thermocouple
  Multithermocouple
  Fibre optic singlemode
  Fibre optic multimode
  Mixed: fibre optic + LV
  Mixed: fibre optic + coax + LV
  Fibre optic singlemode OPTABALL®
  Fluidic
  Multifluidic
  Mixed: fluidic + LV
  Subminiature
- Miniature
  Plastic
- Printed circuit board
- Remote handling
- Watertight
- Sealed (pressure and/or vacuum)
- With plastic outer shell
- With aluminium outer shell
- With stainless steel outer shell
- With special radiation resistant insulator material
  With screw thread coupling for very high pressure
- With microswitch

Patch Panels

For audio-mono applications: triax
- For audio-mono applications: 3 contacts
- For audio-stereo applications: quadrax
- For audio-stereo applications: 6 contacts
  For video applications: coax 75 Ω

Patch Panels

For video HDTV applications: 3 coax 75 Ω + 2LV
For fibre optic applications

Adaptors

For BNC, C, UHF, N, CINCH, GEN-RADIO connectors
For TNC, SMA connectors

Accessories

- Insulator for crimp contacts
- Crimp contacts
  Coaxial contacts
  Triaxial contacts
  Fibre optic contacts
  Fibre optic ferrules
- Caps and bend relief
- Insulating washers
- Double plastic panel washers
- Locking washers
- Tapered washers
- Hexagonal nuts
- Conical nuts
- Round nuts
- Notched nuts
- Earthing washers
- Lead-through with cable collet

Tooling

- Spanners
- Spanners for assembling plug
- Assembly tool
- Pliers
- Tap
- Crimping tools
- Positioners
  Crimping dies
- Extractors
- Insertion testing tool for crimp contacts
  Fibre optic termination workstation
  Fibre optic polishing tools

On request

Filtered connectors
- Connectors with special alloy housing
  Mixed special connectors
  Assembly onto cable

- Connectors, accessories and tools found in this catalogue.

Main Characteristics and Types

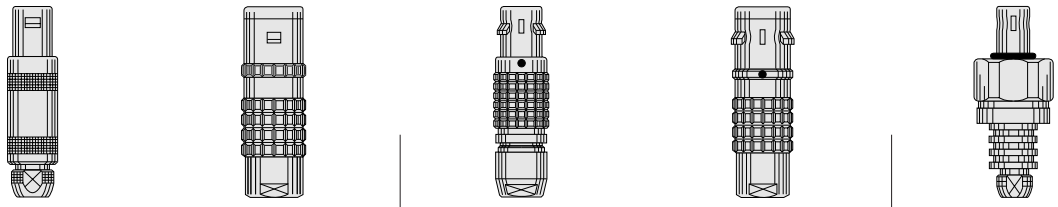

Series	**STANDARD**	**WATERTIGHT**	**KEYED**	**KEYED WATERTIGHT**	**SCREW**
	01 (Minax)	0E to 6E	00 (multipole)	0K to 5K	03
	00 (NIM-CAMAC)	3T	0B to 5B	0F to 5F	0V to 5V
	00 (unipole)	4M	2G/5G	3N to 5N	0W to 5W
	05 / R0				2U to 5U
	0S to 6S				
	0A / 4A				
	1D / 2C				
	1Y-3Y-6Y				
Latching	Push-Pull				Screw
Key	Stepped insert (Half-Moon)		Key (G) or other key-way code		Key (G) or stepped insert (Half-Moon)
Shell	Metal or plastic				Metal
Insert	Hermaphroditic or cylindrical		Cylindrical		Hermaphroditic or cylindrical
Contact	Solder or print		Solder, crimp or print		Solder (crimp or print)

Series and Types

	Series	Types																			
		Unipole	Coaxial 50 Ω	Coaxial 75 Ω	Multipole	High Voltage	Triaxial 50 Ω	Triaxial 75 Ω	Quadrax	Multi HV	Multi Coaxial	Mixed HV+LV	Mixed Coax+LV	Mixed Triax+LV	Fibre Optic	Multi FO	Mixed FO+LV	Fluidic	Multi fluidic	Mixed fluidic+LV	Thermocouple
Standard	01		●																		
	00	●	●				●											●			
	05					●															
	R0		●																		
	0A		●	●																	
	0S	●	●		●	●	●														●
	1S	●	●	●	●	●	●														●
	2S	●	●	●	●	●	●	●				●									●
	3S	●	●	●	●	●	●	●		●		●	●								
	4S	●	●	●	●	●	●	●		●	●	●	●								
	5S	●	●	●	●					●	●	●	●								
	6S				●						●		●								
	1D								●												
	2C		●		●																
	4A							●													
	1Y-3Y-6Y					●															
Watertight	0E	●	●		●	●	●														●
	1E	●	●	●	●	●	●														●
	2E	●	●	●	●	●	●	●				●									●
	3E	●	●	●	●	●	●	●		●		●	●								
	4E	●	●	●	●		●	●				●	●								
	5E	●			●					●	●	●	●								
	6E				●						●		●								
	3T			●				●													
	4M						●	●													
Keyed	00				●										●						
	0B				●										●			●			●
	1B				●							●									●
	2B				●					●	●	●	●	●			●			●	●
	3B				●						●	●	●	●		●	●		●	●	
	4B				●					●	●	●	●	●		●	●		●	●	
	5B				●					●	●	●	●	●		●					
	2G				●																
	5G									●											
Keyed watertight	0K				●										●			●			●
	1K				●							●									●
	2K				●						●	●	●	●			●			●	●
	3K			●	●						●	●	●	●		●	●		●	●	
	4K				●					●	●	●	●	●		●	●		●	●	
	5K				●					●	●	●	●	●		●					
	0F to 5F				●																
	3N to 5N				●																
Screw	03		●		●																
	0V	●	●		●		●													●	
	1V	●	●	●	●		●													●	
	2V	●	●	●	●		●	●				●								●	
	3V	●	●	●	●		●	●		●		●	●								
	4V	●	●	●	●		●	●				●	●								
	5V	●			●					●	●	●	●								
	0W to 5W				●						●	●	●	●			●			●	●
	2U to 5U				●										●	●	●				

Note: ● = included in this catalogue, ● = available but not included in this catalogue.

LEMO's Push-Pull Self-Latching Connection System

This self-latching system is renowned worldwide for its easy and quick mating and unmating features. It provides absolute security against vibration, shock or pull on the cable, and facilitates operation in a very limited space.

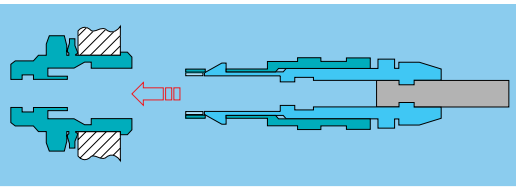

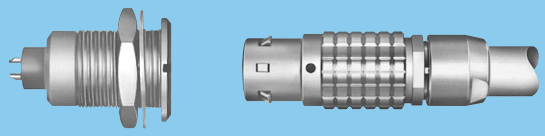

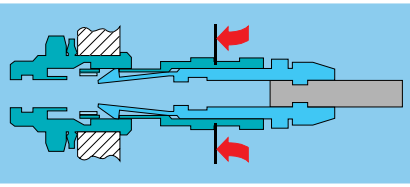

The LEMO self-latching system allows the connector to be mated by simply pushing the plug axially into socket.

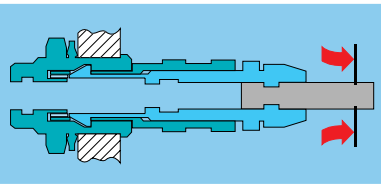

Once firmly latched, connection cannot be broken by pulling on the cable or any other component part other than the outer release sleeve.

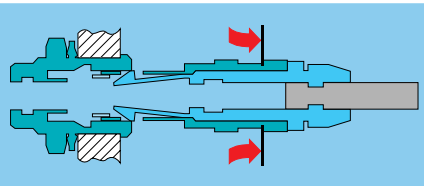

When required, the connector is disengaged by a single axial pull on the outer release sleeve. This first disengages the latches and then withdraws the plug from the socket.

Unipole and Multipole Connectors Production Programme

The production programme is divided into 7 families of connectors. Their main characteristics and features are shown below.

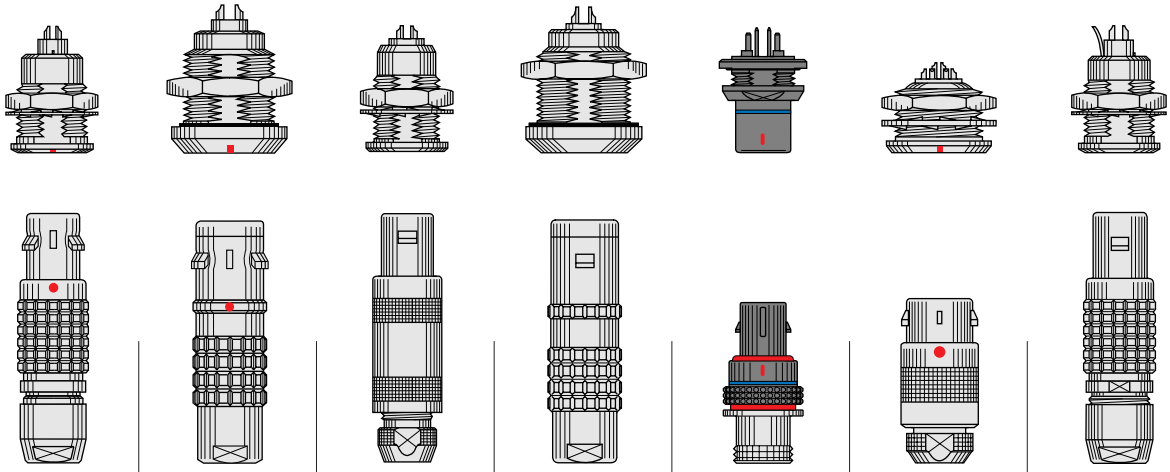

Series	00 multipole 0B to 5B	0K to 5K	00 unipole 0S to 6S	0E to 6E	0F to 5F	2C/2G	1D
Latching	Push-Pull						
Shell	Metal or plastic	Metal	Metal or plastic	Metal	Metal		
Feature	Keyed	Keyed watertight	Hermaphroditic insert	Watertight hermaphroditic	Light compact	Shortened version	4 concentric contacts
Insulator type	Multipole		Multipole or unipole		Multipole		Quadrax
Contact type	Solder, crimp or print		Solder or print		Crimp or print	Solder or print	Solder
Page	13 to 40	41 to 54	67 to 90	91 to 102	125 to 140	141 to 156	157 to 164

Series and contact configurations

Number of contacts	Series																							
	00	0B-0K	1B-1K	2B-2K	3B-3K	4B-4K	5B-5K	00	0S-0E	1S-1E	2S-2E	3S-3E	4S-4E	5S-5E	6S-6E	0F	1F	2F	3F	4F	5F	2C	2G	1D
1								●	●	●	●	●	●	●										
2	●	●	●	●	●		●		●	●	●	●	●	●		●						●		
3	●	●	●	●	●				●	●	●	●	●	●	●	●	●					●		
4	●	●	●	●	●	●	●		●	●	●	●	●	●	●	●						●		●
5		●	●	●	●					●	●	●	●	●		●	●							
6		●	●	●	●	●				●	●	●	●	●								●		
7		●	●	●	●	●					●	●	●				●							
8			●	●	●						●	●	●	●			●	●				●		
9		●			●								●											
10			●	●	●	●	●				●	●	●	●				●				●		
12				●	●	●						●	●	●	●			●				●		
13												●	●											
14			●	●	●		●					●	●	●								●		
16			●	●	●	●	●					●	●	●	●									
18				●	●							●	●	●	●								●	
19				●														●						
20					●	●	●						●	●	●									
22					●								●	●					●					
24					●	●							●	●	●									
26				●	●																			
28					●																			
30					●	●	●							●	●				●					
32				●										●	●									
36														●	●									
40						●	●							●	●					●				
44														●										
48							●							●	●									
50							●														●			
54							●														●			
55																					●			
60															●									
62															●									
64							●								●						●			
66																					●			
72															●									
106															●									

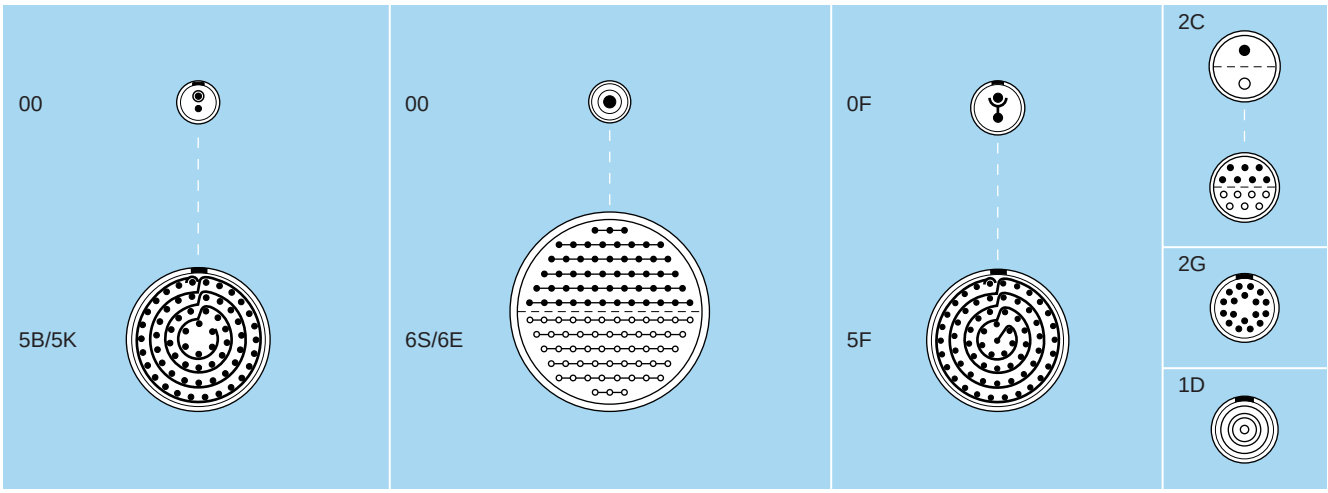

Note: ● = available contact configuration

Introduction

This catalogue gives the complete description of LEMO unipole and multipole type connectors. Our manufacturing programme has been extended to almost 40 series divided into 7 product families, each product with specific mating and environmental characteristics.
Each series includes a wide variety of plug, socket, coupler and bridge plug models, available in contact configurations adapted to all round cables, including up to 106 conductors, and a maximum diameter of 30 mm. Vacuumtight models are also available.
Since LEMO connectors are perfectly screened and designed to guarantee very low resistance to shell electrical continuity, they are particularly adapted to applications where electromagnetic compatibility (EMC) is important.
A large number of accessories as well as tooling for cable assembly are available.

The Standard Series

The characteristic feature of these connector series is the hermaphroditic insulator in the multipole version.
They include principally the 0S and 6S series, as well as the 00 unipole series. The following series, explained in a separate chapter, also belong to this group:
– the 1D quadrax type, with 4 concentric contacts used for audio-stereo applications.
– the 2C multipole type, shortened version of connector for space saving.

The Watertight Series

These series are watertight (IEC 60529/IP 68) when mated and assembled to an appropriate cable. They include the 0E to 6E series and are available in the same types as the S series.

The Keyed Series

Compared to previous series, keyed connectors offer a variety of new features :
– alignment key preventing all errors in alignment,
– polarized keying system, the various keying alternatives preventing unwanted cross mating of otherwise similar connectors,
– higher contact density,
– possible use of crimp contacts to reduce cable assembly time.
These connector series, also including some vacuumtight models, range from 0B to 5B.
The 00 multipole and 2G (shortened version of the 2B series) for space saving also belong to these series.

The Watertight Keyed Series

These connector series combine the characteristics of The **Watertight Series** and the technical features of the keyed series.
This product family includes the 0K to 5K series (IEC 60529/IP 68), available in the same types as the 0B to 5B series and the 0F to 5F series (IP 67), specially designed for applications requiring minimum weight, small size and splash-proofness.

Patch Panels

LEMO patch panels have been specifically developed to meet the requirements of radio and television broadcasting companies to facilitate the switching of large numbers of audio mono signals (0B series multipole 3 contacts) or audio stereo (1B series multipole 6 contacts and 1D series quadrax type) on 19'' panels. On the front side connection is made either by LEMO bridge plugs with or without a monitoring output. On the rear side connection onto the panel is either by plugs specific to the existing system or permanent cable assemblies.

UL Recognition

Many of our connectors are recognized by the Underwriters Laboratories (UL). This recognition is the result of tests carried out on products (product standards) according to the safety hazards for human life and property.
Our products are tested principally for certain properties with regard to flammability and toxicity.
This marking is only used for components incorporated in a complete product or equipment. The approval of the complete equipment is easier if the component bears the Recognized Component Mark.
The listed connectors are subject to a follow-up procedure carried out under the responsibility of UL. The Follow-up is carried out by sampling.
The recognition and the follow-up apply to the insulator raw material (PEEK) as much as the actual connectors.

CE marking

CE marking means that the appliance or equipment bearing it complies with the protection requirements of one or several European safety directives.
CE marking applies to complete products or equipment, **but not to electromechanical components, such as connectors**.

General Characteristics

Selection of watertight connectors

For the selection of watertight connector series or watertight (or vacuumtight) socket models, the conditions and the environment specific to the application should be carefully considered.

Two typical situations may occur:

A) Connectors are either used for outdoor applications or in an environment exposed to splashing water.
The selected **series** must be **watertight when mated**.
The K or E series should be selected. For example an FGG plug and an EGG socket of the K series or an FFA plug and an ERA socket of the E series.

B) The inside of the container ① is under vacuum or filled with pressurized gas. No leakage is allowed between the outside and the inside of this container.
A **watertight or vacuumtight** socket should be selected, depending on the requirements. To give you an example: an FGG plug and a HGG socket of the B series or an FFA plug and a HGP socket of the S series. Watertight sockets are guaranteed to IP 68 protection index. They allow the device on which they are fitted to reach the specified protection index. Measurements are carried out unmated **without electrical power**.
Vacuumtight sockets are assembled according to a special assembly procedure and are fully tested with a helium leakage detector.

A and B situations may be simultaneously present. In this case, an FGG plug and an HGG socket of the K series or an FFA plug and an HGP socket of the E series should be selected.

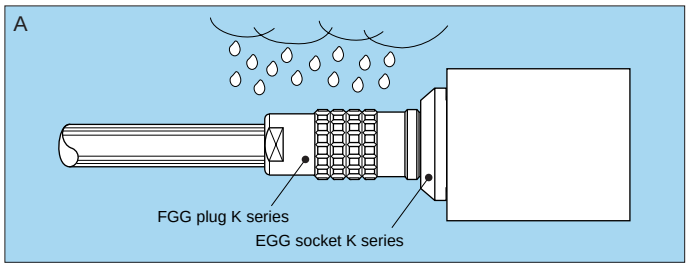

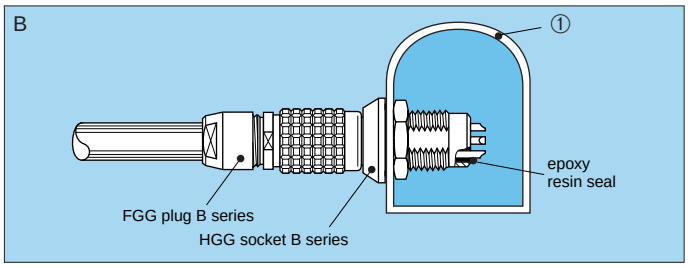

IP 68 watertight cable assembly

All E and K series models with cable collet can be made watertight to IP 68 protection index for applications requiring up to 10 bars if assembled onto appropriate cable. Please consult us for instructions.

Definition of degree of protection (IP code)

IEC 60529 outlines an international classification system for the sealing effectiveness of enclosures of electrical equipment against the intrusion into the equipment of foreign bodies (i.e., tools, dust, fingers) and moisture. This classification system utilizes the letters «IP» (Ingress Protection) followed by two digits.

Example: IP 64 = IP 6 4

IP letter code
1st digit
2nd digit

Degree of protection - First digit

The first digit of the IP code indicates the degree that persons are protected against contact with moving parts and the degree that equipment is protected against solid foreign bodies intruding into an enclosure.

0 No special protection
1 Protection from a large part of the body such as hand or from solid objects greater than 50 mm in diameter
2 Protection against objects not greater than 80 mm in length and 12 mm in diameter
3 Protection from entry by tools, wires, etc., with a diameter or thickness greater than 2.5 mm
4 Protection from entry by solid objects with a diameter or thickness greater than 1.0 mm
5 Protection from the amount of dust that would interfere with the operation of the equipment
6 Dust-tight

Degree of protection - Second digit

Second digit indicates the degree of protection of the equipment inside the enclosure against the harmful entry of various forms of moisture (e.g. dripping, spraying, submersion, etc.)

0 No special protection
1 Protection from vertically dripping water
2 Protection from dripping water when tilted up to 15°
3 Protection from sprayed water
4 Protection from splashed water
5 Protection from water projected from a nozzle
6 Protection against heavy seas, or powerful jets of water
7 Protection against temporary immersion
8 Protection against complete continuous submersion in water

Selection of contact types

Solder contacts

The conductor bucket of these contacts is machined at an angle to form a cup into which the solder can flow.

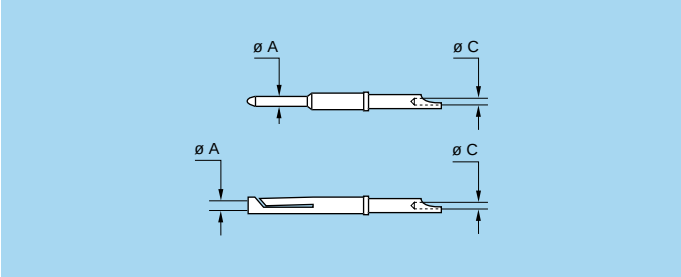

Note:
1) for S, E, 2C, 2G and 1D series
2) for 00 multipole series
3) for a given AWG, the diameter of some stranded conductor designs is larger than the solder cup diameter. Make sure that the maximum conductor diameter is smaller than ø C.

Contact		Conductor			
		Solid		Stranded	
ø A (mm)	ø C (mm)	AWG max.	Section max (mm^2)	AWG max.	Section max (mm^2)
0.5[2]	0.40[2]	28	0.09	30	0.05
0.5	0.45	28	0.09	28	0.09
0.7[1]	0.60[1]	24	0.25	26	0.14
0.7	0.80	22	0.34	22[3]	0.34
0.9	0.80	22	0.34	22[3]	0.34
1.3	1.00	20	0.50	20[3]	0.50
1.6	1.40	16	1.00	18	1.00
2.0	1.80	14	1.50	16	1.50
3.0	2.70	10	4.00	12	4.00
4.0	3.70	10	6.00	10	6.00
5.0	5.20	–	–	8	10.00
6.0	5.20	–	–	8	10.00
8.0	7.00	–	–	4	16.00
12.0	6.20	–	–	6	16.00

Crimp contacts

The crimp contacts are designed to be crimped with the standard four indent method according to MIL-C-22520F, class 1, type 1.

Fig. 1

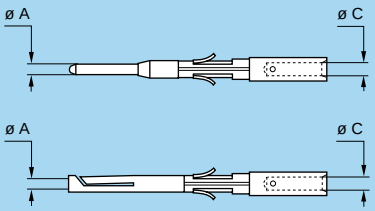

Fig. 2

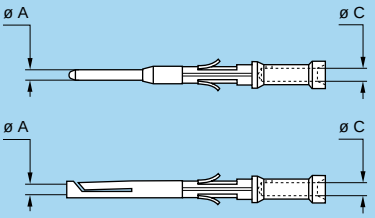

Note: 1) for a given AWG, the diameter of some stranded conductor designs is larger than the solder cup diameter. Make sure that the maximum conductor diameter is smaller than ø C.

A detailed range of conductor dimensions that can be crimped into our contacts is given on the table at right. See also the section on tooling (pages 183 to 188).

Contacts are provided in two forms: with a standard crimp barrel for large conductors (see fig. 1), or with a reduced crimp barrel for smaller conductors (see fig. 2).

Contact			Conductor stranded				F_r (N)
			AWG stranded		Section (mm^2)		
ø A (mm)	ø C (mm)	Form per fig.	min.	max.	min.	max.	
0.5	0.45	1	32	28	0.035	0.09	12
0.7	0.80	1	26	22[1]	0.140	0.34	22
	0.45	2	32	28	0.035	0.09	
0.9	1.10	1	24	20	0.250	0.50	30
	0.80	2	26	22[1]	0.140	0.34	
	0.45	2	32	28	0.035	0.09	
1.3	1.40	1	20	18	0.500	1.00	40
	1.10	2	24	20	0.250	0.50	
	0.80	2	26	22[1]	0.140	0.34	
1.6	1.90	1	18	14[1]	1.000	1.50	50
	1.40	2	22	18	0.340	1.00	
2.0	2.40	1	16	12[1]	1.500	2.50	65
	1.90	2	18	14	1.000	1.50	
3.0	2.90	1	14	10[1]	2.500	4.00	75
4.0	4.00	1	12	10	4.000	6.00	90

Note: Fr = mean contact retention force in the insulator (according to IEC 60512-8 test 15a).

Print contacts

Print contacts are available in straight or elbow versions for certain connector types. Connection is possible by soldering on flexible or rigid printed circuit boards.
Straight print contacts are gold-plated which guarantees optimum soldering, even after longterm storage.
Print elbow contacts include a tinned copper wire crimped into a contact. L dimensions and C ø are detailed in the section on PCB drilling patterns.

straight

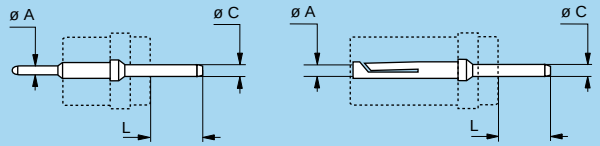

elbow

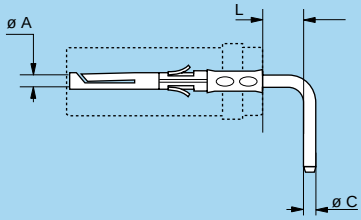

Acceptable cable diameters

Series	Cable diameter range (mm)											
	C type collet		D type collet		K type collet		L type collet		M type collet		With heatshrink boot	
	min.	max.	min.	max.	min.	max.	min.	max.	min.	max.	min.	max.
00[1]	–	–	1.1	3.4	–	–	–	–	–	–	–	–
0B	–	–	1.5	5.5	–	–	–	–	–	–	–	–
1B	–	–	3.1	7.5	–	–	–	–	2.2	3.0	–	–
2B	–	–	4.1	9.7	–	–	–	–	1.5	4.0	–	–
3B	–	–	5.1	11.7	–	–	–	–	4.1	5.0	–	–
4B	–	–	9.1	16.0	–	–	–	–	5.1	9.0	–	–
5B	–	–	9.6	25.0	–	–	–	–	–	–	–	–
0K	1.0	5.0	–	–	–	–	–	–	–	–	–	–
1K	1.3	6.5	–	–	6.6	8.5	–	–	–	–	–	–
2K	1.3	8.5	–	–	8.6	11.0	–	–	–	–	–	–
3K	2.6	10.5	–	–	10.6	15.0	–	–	–	–	–	–
4K	4.8	15.0	–	–	15.6	23.5	–	–	–	–	–	–
5K	9.6	23.5	–	–	–	–	–	–	–	–	–	–
00[2]	1.1	3.0	–	–	3.0	4.1	1.3	3.0	–	–	–	–
0S	1.3	4.3	–	–	3.8	6.7	1.3	4.3	–	–	–	–
1S	1.3	6.7	–	–	6.1	8.5	1.3	6.5	–	–	–	–
2S	1.3	8.5	–	–	8.1	10.5	1.7	8.5	–	–	–	–
3S	2.5	10.5	–	–	11.1	13.0	3.1	10.5	–	–	–	–
4S	4.1	13.0	–	–	13.1	22.0	4.1	13.0	–	–	–	–
5S	6.1	22.0	–	–	22.1	30.0	8.1	21.0	–	–	–	–
6S	11.1	30.0	–	–	–	–	11.1	30.0	–	–	–	–
0E	1.0	5.0	–	–	–	–	–	–	–	–	–	–
1E	1.3	6.5	–	–	6.6	8.5	–	–	–	–	–	–
2E	1.3	8.5	–	–	8.6	11.0	–	–	–	–	–	–
3E	2.6	10.5	–	–	10.6	15.0	–	–	–	–	–	–
4E	4.8	15.0	–	–	15.6	23.5	–	–	–	–	–	–
5E	9.6	23.5	–	–	–	–	–	–	–	–	–	–
6E	13.0	30.0	–	–	–	–	–	–	–	–	–	–
0F	–	–	–	–	–	–	–	–	–	–	3.8	11
1F	–	–	–	–	–	–	–	–	–	–	3.8	13
2F	–	–	–	–	–	–	–	–	–	–	3.8	16
3F	–	–	–	–	–	–	–	–	–	–	3.8	18
4F	–	–	–	–	–	–	–	–	–	–	5.3	25
5F	–	–	–	–	–	–	–	–	–	–	7.4	34
2C	2.2	7.9	–	–	–	–	0.8	8.1	–	–	–	–
2G	–	–	4.5	7.9	–	–	–	–	–	–	–	–
1D	–	–	3.1	7.5	–	–	–	–	–	–	–	–

Note:
[1] for multipole only
[2] for unipole only, crimping (type E) is also available for cables from 1.8 to 3.0 mm.

Part Numbering System

Series

Connectors series can be selected according to environmental requirements or depending on the particular characteristics of each application, such as indoor or outdoor applications, etc...

See table on p. 5 (unipole and multipole connectors production progr.) and p. 8 (selection of watertight connectors)

The size of the series can be defined by the number of conductors, the conductor diameter and the cable jacket diameter.

See table on p. 6 (series and contact configurations) and p. 10 (acceptable cable diameters)

● ● ● ● ● ● ● ● ● ● ● ● ● ●

● ● ● B B series

2 B 2B series

Type

Contact arrangements (type) within a given size can be defined according to the cable design (unipole or multipole) and the required electrical characteristics (rated current).

See type tables in each series

unipole 1 ● ● ●● = contact diameter

multipole 3 ● ● ●● = number of contacts

Model

Models within a given series can be selected according to the application and the panel mounting conditions.

See models available in each series

When available make the right key-way selection

● ● ● F ● ● plug

E ● ● socket

Housing material

The housing material and surface finish depends on the environmental requirements.

See material available in each series

● C chrome-plated brass

Insulator material

The insulator material should be selected according to the insulator type.

See material available in each series

● PEEK (multipole) L

PTFE (unipole) T

Contact

The contact type can be selected according to the model (male or female), conductor retention (solder or crimp) or the application (straight or elbow print).

See contact available in each series

Verify again the contact size matches with the conductor diameter

● A male to solder

L female to solder

Collet

Different clamping systems are proposed in various diameters for screened or unscreened cables.

See collets type of each series and p. 10 (acceptable cable diameter)

Not applicable for sockets E●● or H●●

● ● ● ●● = collet diameter D ● ●

Variant

Several variants are available according to special requirements of the application (bend relief backnut, etc.)

See variant in each series

● nut for fitting a bend relief Z

= Environment = Application = Cable

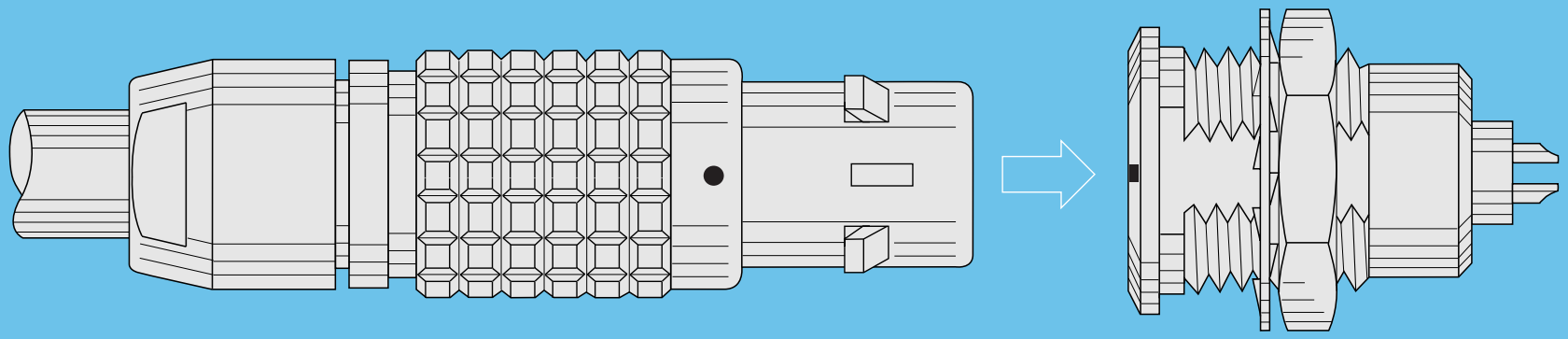

B SERIES

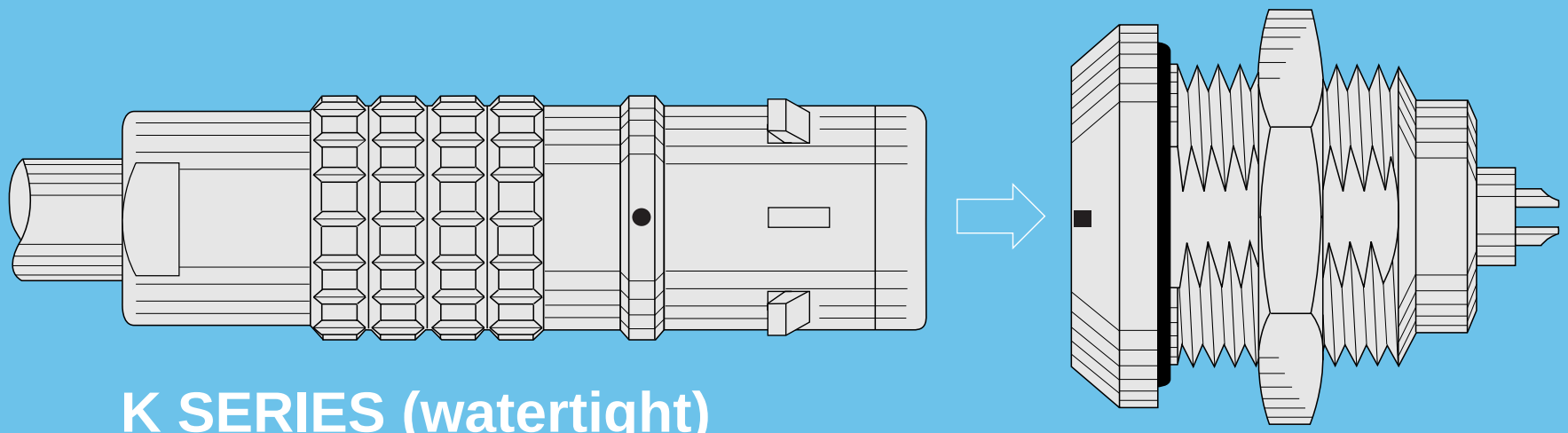

K SERIES (watertight)

B Series

B series connectors provide the following main features:
– security of the Push-Pull self-latching system
– multipole types 2 to 64 contacts
– solder, crimp or print contacts (straight or elbow)
– keying system («G» key standard) for connector alignment
– multiple key options to avoid cross mating of similar connectors
– high packing density for space savings
– 360° screening for full EMC shielding.

Interconnections

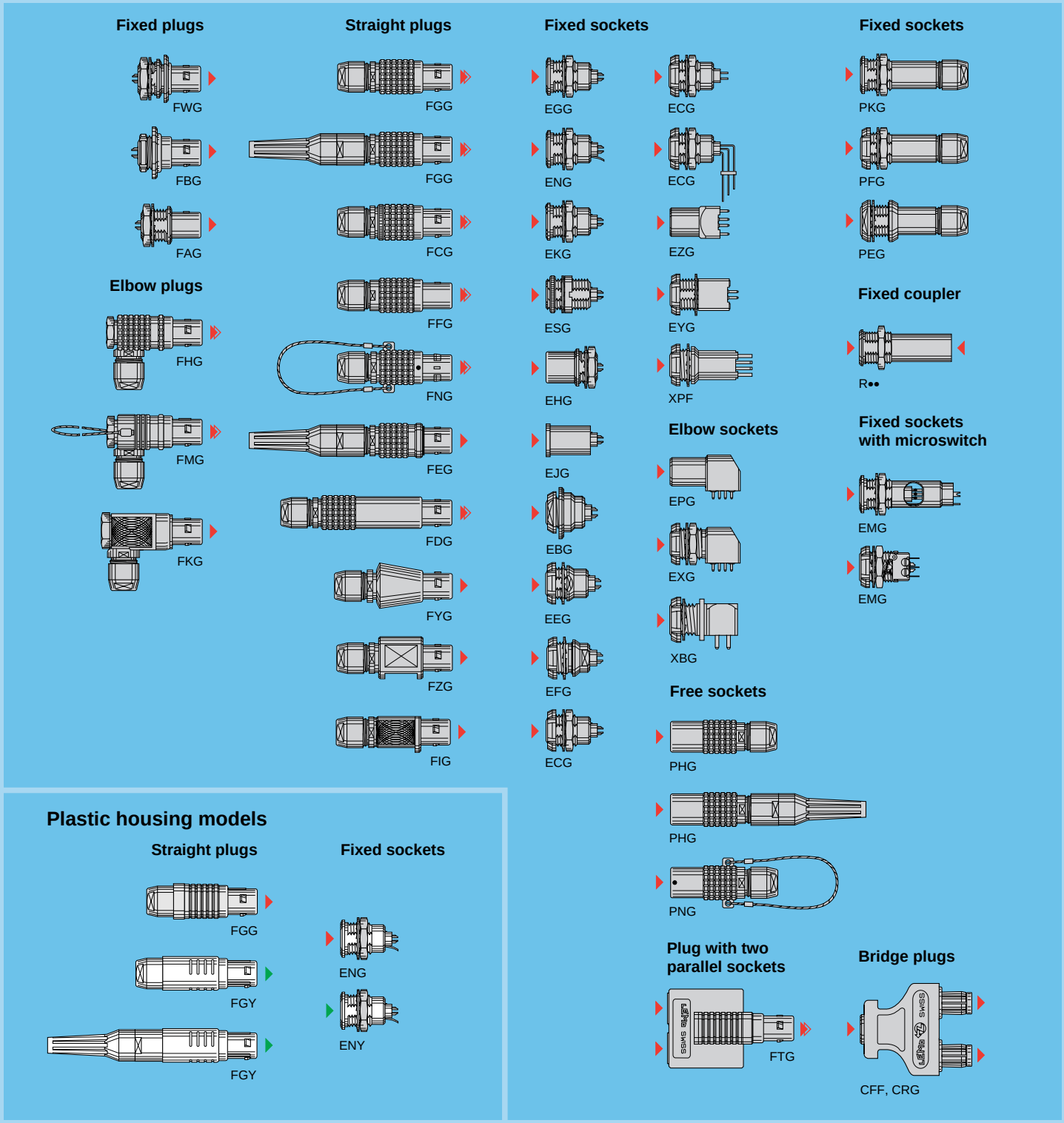

Interconnections

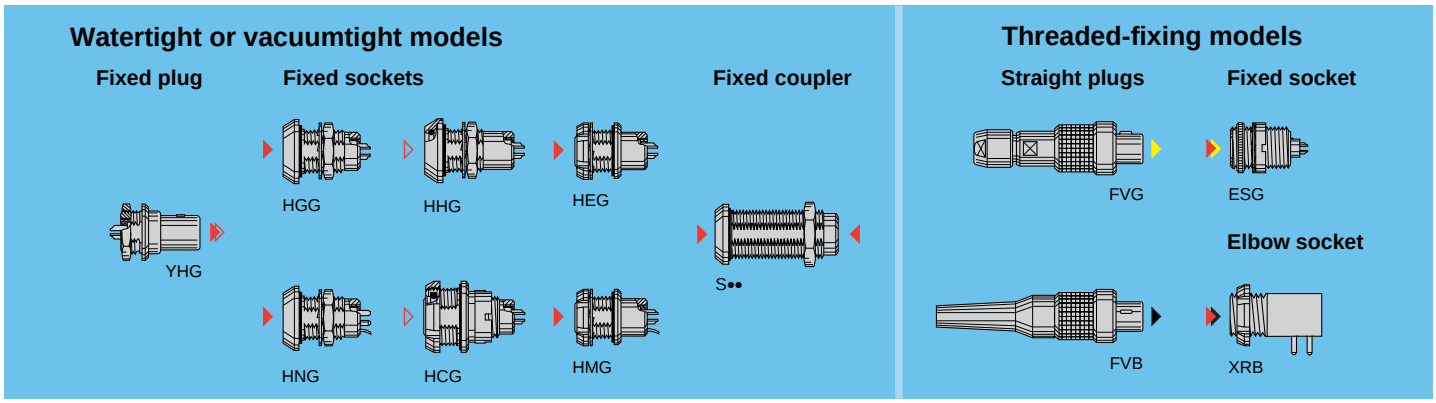

Model Description

CFF Bridge plug with two non-latching plugs
CRG Bridge plug with two non-latching plugs, and monitoring socket and key (G) or keys (A…M)
EBG Fixed socket, nut fixing, round flange, key (G) or keys (A…L and R), screw fixing (back panel mounting)
ECG Fixed socket with two nuts, key (G) or keys (A…M and R) (back panel mounting)
ECG Fixed socket with two nuts, key (G) or keys (A…F and R) and straight contact for printed circuit (back panel mounting)
ECG Fixed socket with two nuts, key (G) or keys (A…F) with elbow (90°) contact for printed circuit (back panel mounting)
EEG Fixed socket, nut fixing, key (G) or keys (A…M and R) (back panel mounting)
EFG Fixed socket, nut fixing, key (G) or keys (A…M), with two flats on the shell and O-ring (back panel mounting)
EGG Fixed socket, nut fixing, key (G) or keys (A…M and R)
EHG Fixed socket, nut fixing, key (G) or keys (A…M and R), and protruding shell
EJG Fixed socket, press or adhesive fit, key (G) or keys (A…M)
EKG Fixed socket, nut fixing, key (G) or keys (A…L and R), special alignment mark on the front
EMG Fixed socket, nut fixing, microswitch, key (G) or keys (A…L)
EMG Fixed socket, with two nuts, microswitch, key (G) or keys (A…L)
ENG Fixed socket with earthing tag, nut fixing, with key (G) or keys (A…M)
ENG Fixed socket with earthing tag, nut fixing, key (G or J), PEEK outer shell
ENY Fixed socket with earthing tag, nut fixing, keys (Y), PSU or PPSU outer shell
EPG Elbow (90°) socket for printed circuit, key (G) or keys (A…F) (solder or screw fixing)
ESG Fixed socket with two round nuts, key (G) or keys (A…L), long threaded shell (back panel mounting)
EXG Elbow (90°) socket for printed circuit with two nuts, key (G) or keys (A…F) (solder or screw fixing)
EYG Fixed socket for printed circuit, nut fixing, key (G) or keys (A…F) (back panel mounting)
EZG Straight socket for printed circuit, key (G) or keys (A…F)
FAG Fixed plug, non-latching, nut fixing, key (G) or keys (A…M and R)
FBG Fixed plug, nut fixing, round flange, key (G) or keys (A…L and R), screw fixing
FCG Straight plug, key (G) or keys (A…L and R), cable collet and safety locking ring
FDG Straight plug, long version, key (G) or keys (A…L), cable collet
FEG Straight plug, key (G) or keys (A…L), cable collet, front seal and nut for fitting a bend relief
FFG Straight plug, non-latching, key (G) or keys (A…M), cable collet
FGG Straight plug, key (G) or keys (A…M and R), cable collet
FGG Straight plug, key (G) or keys (A…M), cable collet and nut for fitting a bend relief
FGG Straight plug, key (G or J), cable collet, PEEK outer shell
FGY Straight plug, keys (Y), cable collet and PSU or PPSU outer shell
FGY Straight plug, keys (Y), cable collet and PSU or PPSU outer shell and nut for fitting a bend relief
FHG Elbow (90°) plug, key (G) or keys (A…M and R), cable collet
FIG Straight plug for remote handling, key (G) or keys (A…L and R), special alignment mark, knurled handling surface, cable collet
FKG Elbow (90°) plug for remote handling, key (G) or keys (A…L), special alignment mark, knurled handling surface, cable collet
FMG Elbow (90°) plug, key (G) or keys (A…M), cable collet and lanyard release
FNG Straight plug, key (G) or keys (A…M and R), cable collet and lanyard release
FTG Straight plug, key (G) and two parallel sockets
FYG Straight plug, conical shell, key (G) or keys (A…M), cable collet
FVB Straight plug, keys (B), threaded-fixing for special cable crimping
FVG Straight plug, key (G) or keys (A, B), cable collet, threaded-fixing
FWG Fixed plug, nut fixing, key (G) or keys (A…L)
FZG Straight plug for remote handling, key (G) or keys (A…L and R), cable collet
HCG Fixed socket, nut fixing, key (G) or keys (A…M), watertight or vacuumtight (back panel mounting)
HEG Fixed socket, nut fixing, key (G) or keys (A…M), or vacuumtight (back panel mounting)
HGG Fixed socket, nut fixing, key (G) or keys (A…M and R), watertight or vacuumtight
HHG Fixed socket, nut fixing, key (G) or keys (A…M), watertight or vacuumtight
HMG Fixed socket with earthing tag, nut fixing, key (G) or keys (A…M), watertight or vacuumtight (back panel mounting)
HNG Fixed socket, nut fixing, with earthing tag, key (G) or keys (A…M), watertight or vacuumtight
PEG Fixed socket, nut fixing, key (G) or keys (A…L), cable collet (back panel mounting)
PFG Fixed socket, with two nuts, key (G) or keys (A…M and R), cable collet (back panel mounting)
PHG Free socket, key (G) or keys (A…M and R), cable collet
PHG Free socket, key (G) or keys (A…M), cable collet and nut for fitting a bend relief
PKG Fixed socket, nut fixing, key (G) or keys (A…M and R), cable collet
PNG Free socket, nut fixing, key (G) or keys (A…L and R), cable collet with lanyard release
R•• Fixed coupler, nut fixing, key (G) or keys (A and J) at the flange end and keys (J, K or M) at the other end
S•• Fixed coupler, nut fixing, key (G) or keys (A, B, J, K and L) at the flange end and key (G) or keys (A, B, J, K and L) at the other end, watertight or vacuumtight
XBG Elbow (90°) socket fixing nut for printed circuit, key (G) or keys (A, B) (back panel mounting)
XPF Fixed socket, nut fixing, long shell, keys (F) for printed circuit (back panel mounting)
XRB Elbow (90°) socket fixing nut for printed circuit, keys (B), short shell, threaded-fixing (back panel mounting)
YHG Fixed plug, nut fixing, non-latching, key (G) or keys (A…M)

Part Section Showing Internal Components

Fixed socket

1. outer shell
2. earthing crown
3. retaining ring
4. hexagonal nut
5. locking washer
6. insulator
7. female contact

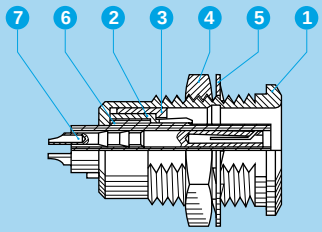

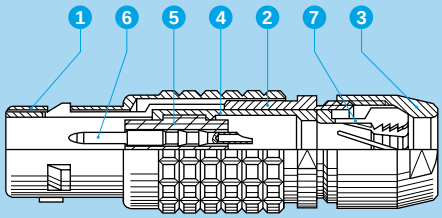

Straight plug

1. outer shell
2. latch sleeve
3. collet nut
4. split insert carrier
5. insulator
6. male contact
7. collet

Technical Characteristics

Mechanical and Climatical

Characteristics	Value	Standard
Endurance	> 5000 cycles	IEC 60512-5 test 9a
Humidity	up 95% to 60° C	
Temperature range[1)]	- 55° C, +250° C	
Resistance to vibration	10-2000 Hz, 15 g	IEC 60512-4 test 6d
Shock resistance	100 g, 6 ms	IEC 60512-4 test 6c
Salt spray corrosion test	> 144h	IEC 60512-6 test 11f
Protection index (mated)	IP50	IEC 60529
Climatical category[1)]	55/175/21	IEC 60068-1

Electrical

Characteristics		Value	Standard
Shielding efficiency	at 10 MHz	> 75 dB	IEC 60169-1-3
	at 1 GHz	> 40 dB	IEC 60169-1-3

Note:
the various tests have been carried out with FGG and EGG connector pairs, with chrome-plated brass shell and PEEK insulator.
Detailed electrical characteristics, as well as materials and treatment are presented in the chapter Technical Characteristics on page 197.
[1)] for watertight or vacuumtight models see page 37.

Available Models (series and types)

Model	Multipole						
	00	0B	1B	2B	3B	4B	5B
CFF		●	●				
CRG		●	●				
EBG							●
ECG	●	●	●	●	●	●	●
ECG [2)]		●	●	●	●		
EEG	●	●	●	●	●		●
EFG		●					
EGG	●	●	●	●	●	●	●
EHG	●	●	●	●	●		●
EJG		●	●	●			
EKG				●	●	●	●
EMG		●	●	●			
ENG		●	●	●	●	●	
ENG [3)]			●		●	●	
ENY [4)]				●	●		
EPG	●	●	●				
ESG	●		●				
EXG		●	●				
EYG		●	●				
EZG	●	●	●	●			

Model	Multipole						
	00	0B	1B	2B	3B	4B	5B
FAG	●	●	●	●	●	●	●
FBG							●
FCG			●			●	●
FDG			●	●			
FEG			●	●	●		
FFG		●	●	●	●	●	
FGG	●	●	●	●	●	●	●
FGG [5)]	●	●	●	●	●	●	
FGG [3)]			●		●	●	
FGY [4) 6)]				●	●		
FGY [4) 5) 6)]				●	●		
FHG	●	●	●	●	●	●	●
FIG				●	●	●	●
FKG					●	●	
FMG		●					
FNG		●	●	●	●	●	●
FTG [1)]		●					
FVB	●						
FVG	●						
FWG			●	●			

Model	Multipole						
	00	0B	1B	2B	3B	4B	5B
FYG		●					
FZG				●	●	●	●
HCG		●	●	●			
HEG				●			
HGG	●	●	●	●	●	●	●
HHG		●	●	●	●		
HMG		●	●		●		
HNG		●					
PEG					●	●	
PFG	●	●	●	●	●	●	●
PHG	●	●	●	●	●	●	●
PHG [5)]	●	●	●	●	●	●	
PKG	●	●	●	●	●	●	●
PNG			●	●	●	●	●
R●●		●	●	●	●	●	
S●●		●	●	●	●	●	●
XBG	●						
XRB	●						
XPF		●					
YHG		●	●	●	●		

Note:
CFF, CRG, EMG, EPG, EXG and FTG models are not available in all types. Please consult pages corresponding to the models.
[1)] only available with «G» key
[2)] with elbow (90°) print contact
[3)] with PEEK outer shell
[4)] only available with «Y» key
[5)] with nut for fitting a bend relief
[6)] with PSU or PPSU outer shell
● = available models by series and types

Alignment Key and Polarized Keying System

B series connector model part numbers are composed of three letters. The LAST LETTER indicates the key position and the contact type (male or female).
For example, straight plugs with «G» key or A, B, C, D, E, F, R or Y keys, are fitted with male contacts, whereas with J, K, L, M keys, plugs are fitted with female contacts.
Sockets with «G» key or A, B, C, D, E, F, R or Y keys, are fitted with female contacts; whereas with J, K, L, M keys, sockets are fitted with male contacts.

Front view of a socket

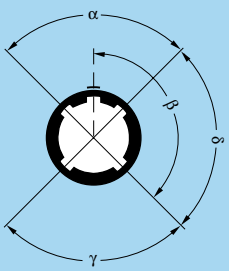

Model	Nb of keys	Angles	Series 00	Series 0B	Series 1B	Angles	Series 2B	Series 3B	Series 4B	Series 5B	Contact type Plug	Contact type Socket	Contact type Coupler [1]	Note
●●G	1		0°	0°	0°		0°	0°	0°	0°	male	female	male-female	●
●●A	2	α	30°	30°	30°	α	30°	30°	30°	30°	male	female	male-female	●
●●B	2		60°	60°	60°		45°	45°	45°	45°	male	female	male-female	●
●●C	2		–	90°	90°		60°	60°	60°	60°	male	female	male-female	●
●●D	2	β	–	135°	135°	γ	95°	95°	95°	95°	male	female	male-female	○
●●E	2		–	145°	145°	β	120°	120°	120°	120°	male	female	male-female	○
●●F	2		–	155°	155°		145°	145°	145°	145°	male	female	male-female	○
●●J	2	γ	45°	45°	45°	α	37.5°	37.5°	37.5°	37.5°	female	male	female-male	●
●●K	2		–	70°	70°		52.5°	52.5°	52.5°	52.5°	female	male	female-male	○
●●L	2		–	80°	80°	γ	70°	70°	70°	70°	female	male	female-male	○
●●M	2	δ	–	110°	–	–	–	–	–	–	female	male	female-male	○
●●Y	3	–	–	–	–	β	112.5°	126°	–	–	male	female	–	●[2]
		–	–	–	–	γ	100°	102°	–	–				

Front view of a socket

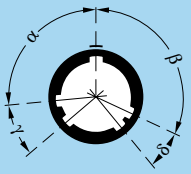

Model	Nb of keys	Angles	Series 00	Series 0B	Series 1B	Angles	Series 2B	Series 3B	Series 4B	Series 5B	Contact type Plug	Contact type Socket	Contact type Coupler [1]	Note
●●R	5	α	–	–	–	α	–	–	–	95°	male	female	male-female	●
		β	–	–	–	β	–	–	–	115°				
		γ	–	–	–	γ	–	–	–	20°				
		δ	–	–	–	δ	–	–	–	30°				

Note:
FTG, FGY, ENY models are not available with all the keys. Please consult pages corresponding to these models.
For R●● models see explanation on page 32 and for S●● models see explanation on page 39.
[1] the first contact type mentioned is always the one at the flange end.
[2] only FGY and ENY models are available.

● First choice alternative ○ Special order alternative

Part Number Example

Straight plug with cable collet

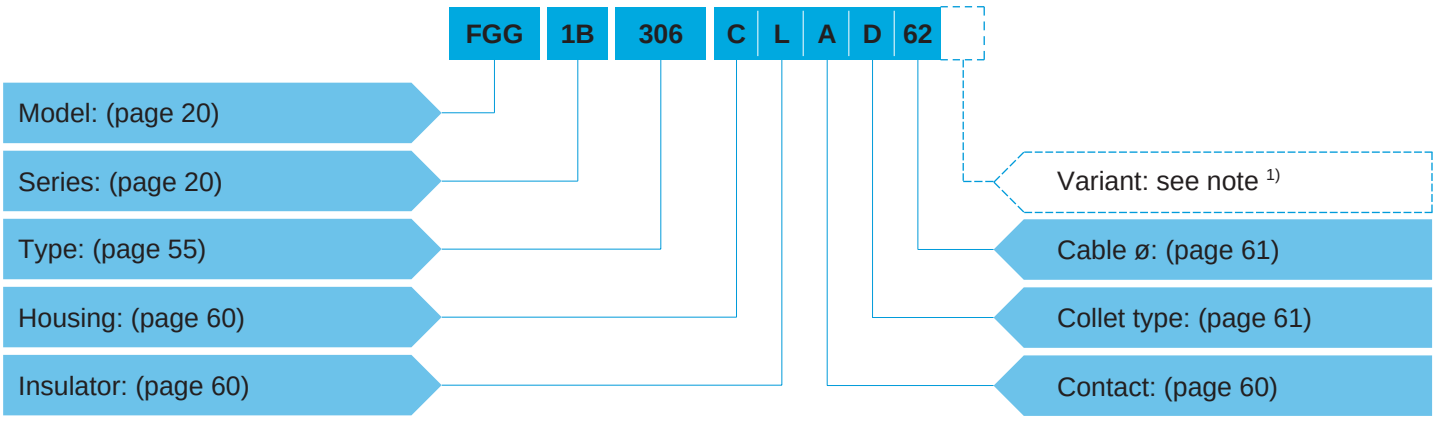

FGG.1B.306.CLAD62 = straight plug with key (G) and cable collet, 1B series, multipole type with 6 contacts, outer shell in chrome-plated brass, PEEK insulator, male solder contacts, D type collet for 6.0 mm diameter cable.

Fixed socket

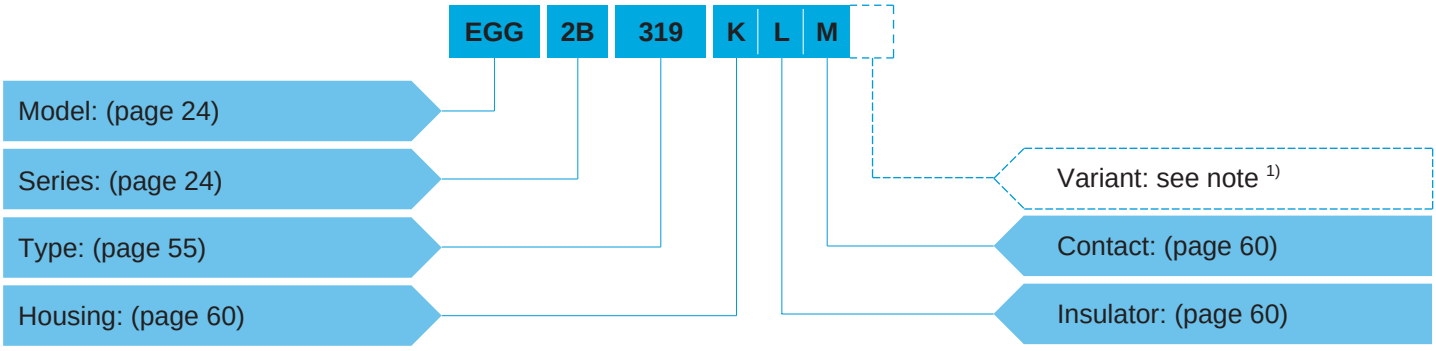

EGG.2B.319.KLM = fixed socket, nut fixing, with key (G), 2B series, multipole type with 19 contacts, black chrome-plated brass outer shell, PEEK insulator, female crimp contacts.

Fixed coupler

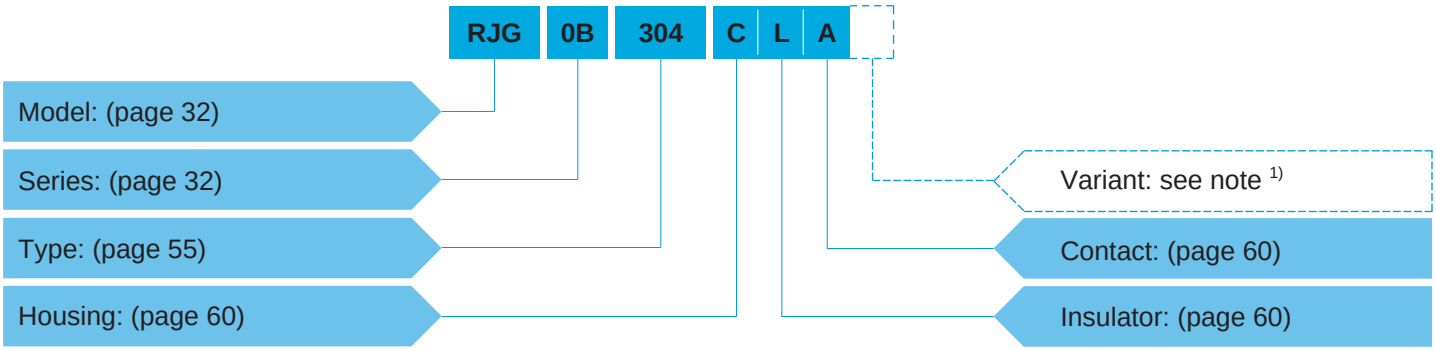

RJG.0B.304.CLA = straight fixed coupler with keys (J) at the flange end and key (G) at the other end, 0B series, multipole type with 4 contacts, chrome-plated brass outer shell, PEEK insulator, male-female contacts.

Note: 1) the «Variant» position in the reference is used to specify either the presence of a collet nut for fitting the bend relief, or the anodized colour of the housing in aluminium alloy, or the colour of the bridge plug housing.
For models with collet nut for fitting the bend relief, a «Z» should be indicated and a bend relief can be ordered separately as indicated in the «Accessories» section. An order for a connector with bend relief should thus include two part numbers.
For the various housings available in colours, the corresponding letter in the part number for the colour is indicated on page 66.
For the watertight models of socket, the letter «P» is used; for the vacuumtight models of socket the letters «PV» shall be indicated.

Models - Series

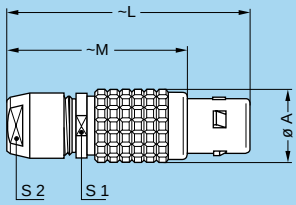

FGG Straight plug, key (G) or keys (A…M and R), cable collet

Reference		Dimensions (mm)				
Model	Series	A	L	M	S1	S2
FGG	00[1)]	6.4	28.5	20.5	5.5	5
FGG	0B	9.5	36.0	26.0	8.0	7
FGG	1B	12.0	43.0	32.0	10.0	9
FGG	2B	15.0	50.0	38.0	13.0	12
FGG	3B	18.0	58.0	43.0	15.0	14
FGG	4B	25.0	75.0	57.0	21.0	20
FGG	5B	35.0	103.0	78.0	31.0	30

Note: [1)] the surface design of the 00 series is different.

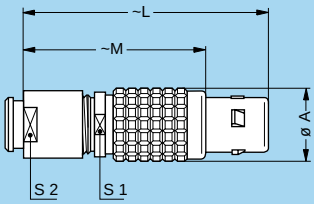

FGG Straight plug, key (G) or keys (A…M), cable collet and nut for fitting a bend relief

Reference		Dimensions (mm)				
Model	Series	A	L	M	S1	S2
FGG	00[1)]	6.4	27.5	18.5	5.5	5
FGG	0B	9.5	35.0	25.0	8.0	7
FGG	1B	12.0	42.0	33.0	10.0	9
FGG	2B	15.0	48.0	36.0	13.0	12
FGG	3B	18.0	56.5	41.5	15.0	15
FGG	4B	25.0	71.0	53.0	21.0	20

Note: [1)] the surface design of the 00 series is different.
The bend relief must be ordered separately (see page 175).

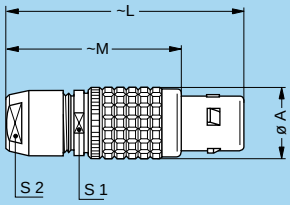

FCG Straight plug, key (G) or keys (A…L and R), cable collet and safety locking ring

Reference		Dimensions (mm)				
Model	Series	A	L	M	S1	S2
FCG	1B	12	43	32	10	9
FCG	4B	25	75	57	21	20
FCG	5B	35	103	78	31	30

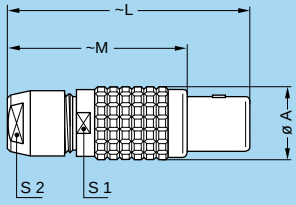

FFG Straight plug, non-latching, key (G) or keys (A…M), cable collet

Reference		Dimensions (mm)				
Model	Series	A	L	M	S1	S2
FFG	0B	9.5	36	26	8	7
FFG	1B	12.0	43	32	10	9
FFG	2B	15.0	49	37	13	12
FFG	3B	18.0	58	43	15	14
FFG	4B	25.0	75	57	21	20

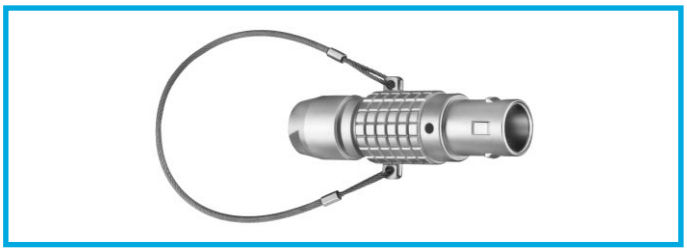

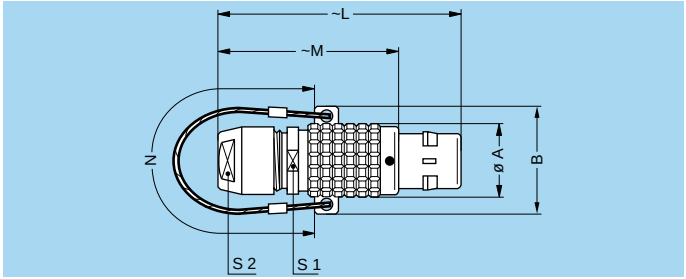

FNG Straight plug, key (G) or keys (A…M and R), cable collet and lanyard release

Reference		Dimensions (mm)						
Model	Series	A	B	L	M	N	S1	S2
FNG	0B	9.5	19.4	28.5	20.5	140	8	7
FNG	1B	12.0	19.4	43.0	32.0	140	10	9
FNG	2B	15.0	22.6	49.0	37.0	160	13	12
FNG	3B	18.0	25.6	58.0	43.0	190	15	14
FNG	4B	25.0	35.2	75.0	57.0	230	21	20
FNG	5B	35.0	47.0	103.0	78.0	300	31	30

Note: cable material: stainless steel with PVC sheath.
The outer shell of the FNG.0B model is similar to the FMG.0B model.

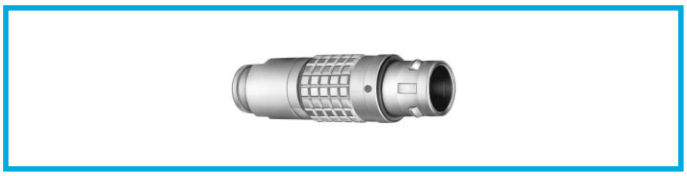

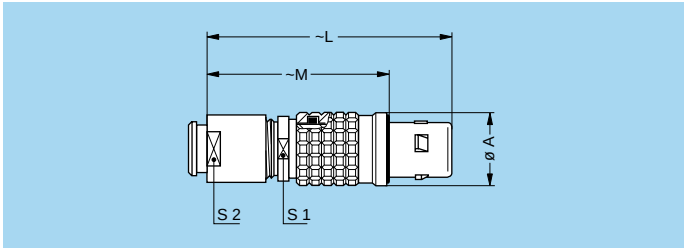

FEG Straight plug, key (G) or keys (A…L), cable collet, front seal and nut for fitting a bend relief

(IP 54 protection index when mated)

Reference		Dimensions (mm)				
Model	Series	A	L	M	S1	S2
FEG	1B	13.5	42.0	33.0	10	9
FEG	2B	16.5	48.0	36.0	13	12
FEG	3B	19.0	56.5	41.5	15	15

Note: the bend relief must be ordered separately (see page 175).

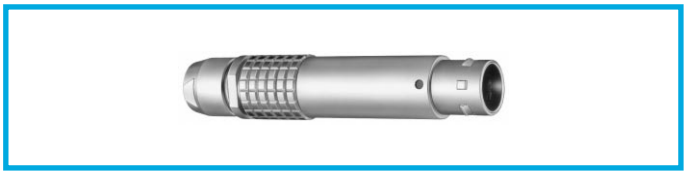

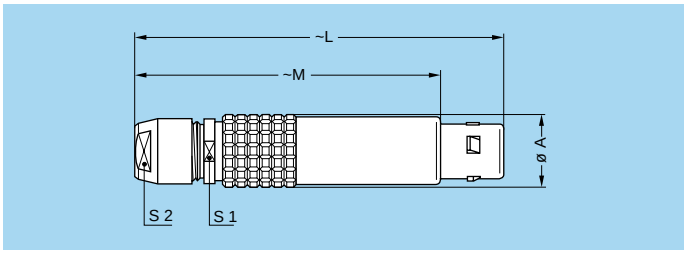

FDG Straight plug, long version, key (G) or keys (A…L), cable collet

Reference		Dimensions (mm)				
Model	Series	A	L	M	S1	S2
FDG	1B	12	68	57	10	9
FDG	2B	15	79	67	13	12

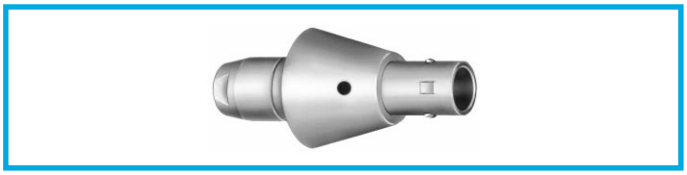

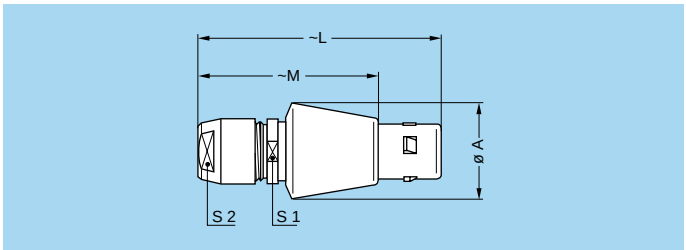

FYG Straight plug, conical shell, key (G) or keys (A…M), cable collet

Reference		Dimensions (mm)				
Model	Series	A	L	M	S1	S2
FYG	0B	15.5	36	26	8	7

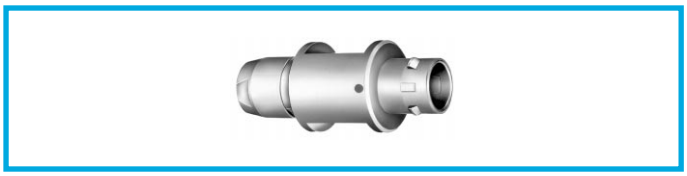

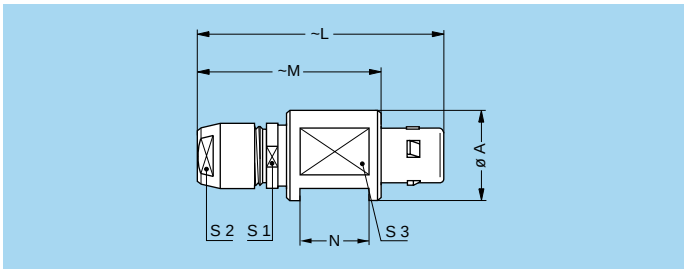

FZG Straight plug for remote handling, key (G) or keys (A…L and R), cable collet

Reference		Dimensions (mm)						
Model	Series	A	L	M	N	S1	S2	S3
FZG	2B	20	49	37	15	13	12	15
FZG	3B	22	58	43	18	15	14	18
FZG	4B	30	75	57	25	21	20	25
FZG	5B	40	103	78	35	31	30	35

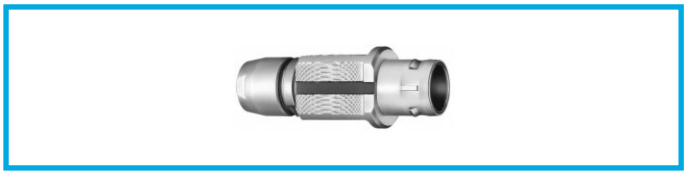

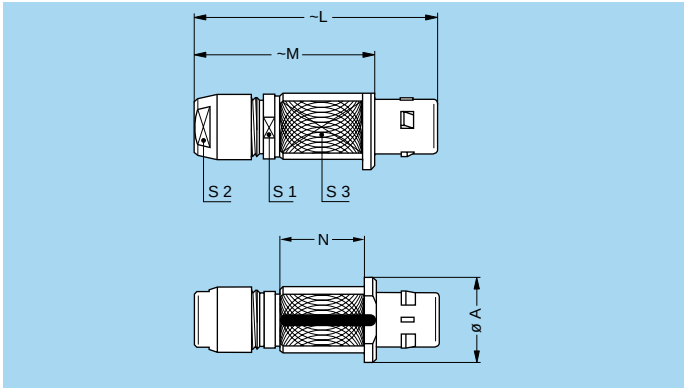

FIG Straight plug for remote handling, key (G) or keys (A…L and R), special alignment mark, knurled handling surface, cable collet

Reference		Dimensions (mm)						
Model	Series	A	L	M	N	S1	S2	S3
FIG	2B	20	49	37	17.5	13	12	15
FIG	3B	22	58	43	21.5	15	14	18
FIG	4B	30	75	57	28.5	21	20	25
FIG	5B	40	103	78	41.0	31	30	35

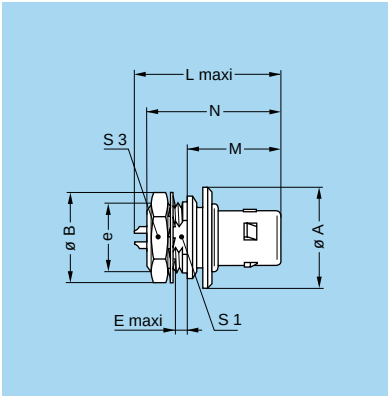

FWG Fixed plug, nut fixing, key (G) or keys (A…L)

Reference		Dimensions (mm)								
Model	Series	A	B	e	E	L	M	N[1)]	S1	S3
FWG	1B	18.0	16.0	M12x1.0	3.0	24.9	17	24.8	10.5	14
FWG	2B	19.5	19.5	M15x1.0	5.2	28.6	18	27.3	13.5	17

Panel cut-out: **P9**

Note: [1)] maximum length with crimp contacts

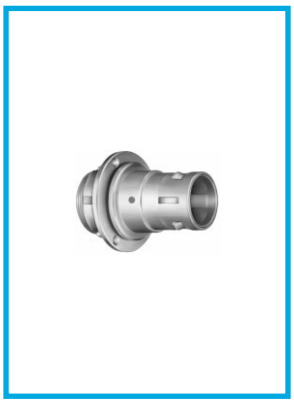

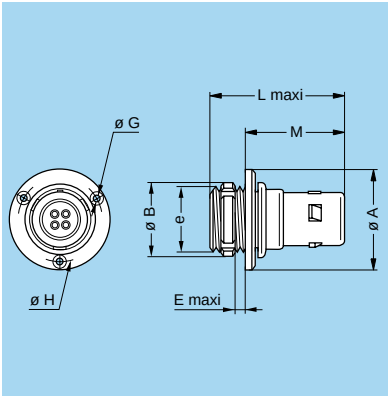

FBG Fixed plug, nut fixing, round flange, key (G) or keys (A…L and R), screw fixing

Reference		Dimensions (mm)							
Model	Series	A	B	e	E	G	H	L	M
FBG	5B	54	40	M35x1.0	9	3	47	61.5	44.5

Panel cut-out: **P8**

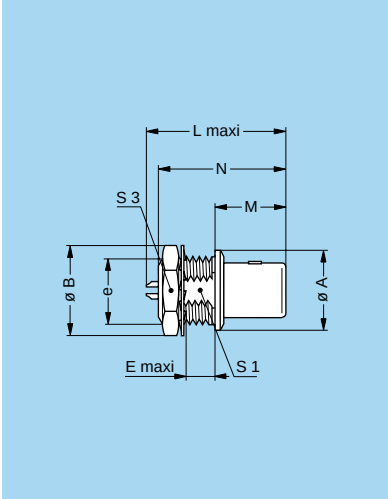

FAG Fixed plug, non-latching, nut fixing, key (G) or keys (A…M and R)

Reference		Dimensions (mm)								
Model	Series	A	B	e	E	L	M	N[1)]	S1	S3
FAG	00	8	10.3	M7x0.5	2.0	16.9	9.0	15.5	6.3	9
FAG	0B	10	12.5	M9x0.6	3.5	21.1	11.2	19.8	8.2	11
FAG	1B	14	16.0	M12x1.0	7.0	24.9	12.5	23.3	10.5	14
FAG	2B	18	19.5	M15x1.0	7.0	28.6	13.8	26.8	13.5	17
FAG	3B	22	25.2	M18x1.0	8.0	32.1	17.0	30.3	16.5	22
FAG	4B	28	32.0	M25x1.0	8.0	36.6	20.5	34.8	23.5	30
FAG	5B	40	40.0	M35x1.0	7.0	47.4	28.0	43.8	33.5	–

Note: 1) maximum length with crimp contacts. The 5B series is delivered without locking washer or tapered washer and with a round nut.

Panel cut-out: **P1**

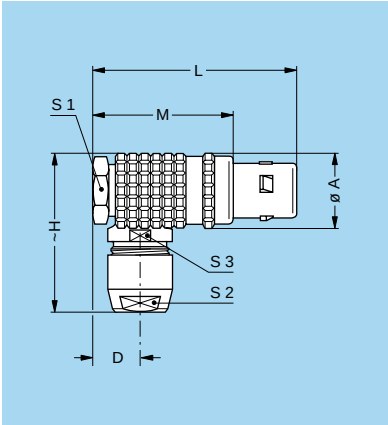

FHG Elbow (90°) plug, key (G) or keys (A…M and R), cable collet

Reference		Dimensions (mm)							
Model	Series	A	D	H	L	M	S1	S2	S3
FHG	00[1)]	7.7	5.2	18	24.5	16.5	7	5	5.5
FHG	0B	11.0	6.5	23	30.0	20.0	9	7	8.0
FHG	1B	13.5	8.0	28	36.0	25.0	11	9	10.0
FHG	2B	16.5	9.0	34	41.5	29.5	14	12	13.0
FHG	3B	19.0	10.0	37	50.0	35.0	17	14	15.0
FHG	4B	26.0	15.0	52	67.0	49.0	22	20	21.0
FHG	5B	36.0	21.0	74	90.0	65.0	32	30	31.0

Note: 1) the surface design of the 00 series is different.

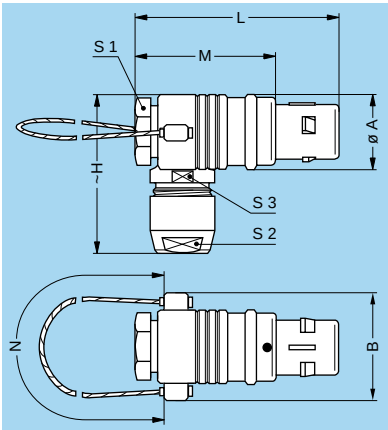

FMG Elbow (90°) plug, key (G) or keys (A…M), cable collet and lanyard release

Reference		Dimensions (mm)								
Model	Series	A	B	H	L	M	N	S1	S2	S3
FMG	0B	11	17	26	31.6	21.6	140	10	7	8

Note: cable material: stainless steel with PVC sheath

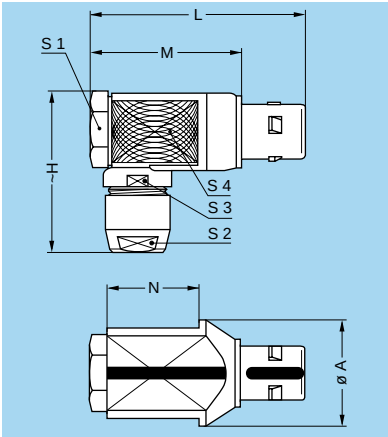

FKG Elbow (90°) plug for remote handling, key (G) or keys (A…L), special alignment mark, knurled handling surface, cable collet

Reference		Dimensions (mm)								
Model	Series	A	H	L	M	N	S1	S2	S3	S4
FKG	3B	25	37	50	35	21.0	17	14	15	21
FKG	4B	51	52	67	49	28.5	22	20	21	28

Note: dimension D is the same as for the FHG model.

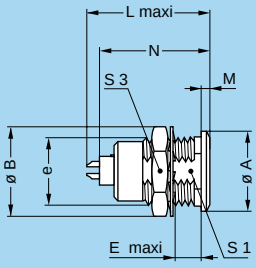

EGG Fixed socket, nut fixing, key (G) or keys (A…M and R)

Reference		Dimensions (mm)								
Model	Series	A	B	e	E	L	M	N[1)]	S1	S3
EGG	00	8	10.3	M7x0.5	5.5	15.5	1.0	13.7	6.3	9
EGG	0B	10	12.5	M9x0.6	7.0	20.7	1.2	19.1	8.2	11
EGG	1B	14	16.0	M12x1.0	7.5	23.0	1.5	21.1	10.5	14
EGG	2B	18	19.5	M15x1.0	8.5	26.7	1.8	24.6	13.5	17
EGG	3B	22	25.0	M18x1.0	11.5	30.7	2.0	28.1	16.5	22
EGG	4B	28	32.0	M25x1.0	12.0	35.7	2.5	32.6	23.5	30
EGG	5B	40	40.0	M35x1.0	11.0	43.5	3.0	39.6	33.5	–

Panel cut-out: **P1**

Note: 1) maximum length with crimp contacts.
The 5B series is delivered with a tapered washer and a round nut.

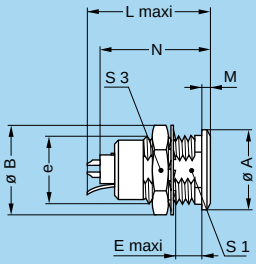

ENG Fixed socket with earthing tag, nut fixing, key (G) or keys (A…M)

Reference		Dimensions (mm)								
Model	Series	A	B	e	E	L	M	N[1)]	S1	S3
ENG	0B	10	12.5	M9x0.6	7.0	20.7	1.2	19.1	8.2	11
ENG	1B[2)]	14	16.0	M12x1.0	7.5	23.0	1.5	21.1	10.5	14
ENG	2B	18	19.5	M15x1.0	8.5	26.7	1.8	24.6	13.5	17
ENG	3B	22	25.0	M18x1.0	11.5	30.7	2.0	28.1	16.5	22
ENG	4B	28	32.0	M25x1.0	12.0	35.7	2.5	32.6	23.5	30

Panel cut-out: **P1**

Note: 1) maximum length with crimp contacts.
2) for the 1B series the earthing tag is on the upper side.

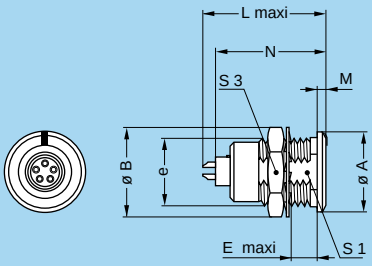

EKG Fixed socket, nut fixing, key (G) or keys (A…L and R), special alignment mark on the front

Reference		Dimensions (mm)								
Model	Series	A	B	e	E	L	M	N[1)]	S1	S3
EKG	2B	18	19.5	M15x1.0	8.5	26.7	1.8	24.6	13.5	17
EKG	3B	22	25.0	M18x1.0	11.5	30.7	2.0	28.1	16.5	22
EKG	4B	28	32.0	M25x1.0	12.0	35.7	2.5	32.6	23.5	30
EKG	5B	40	40.0	M35x1.0	11.0	43.5	3.0	39.6	33.5	–

Panel cut-out: **P1**

Note: 1) maximum length with crimp contacts.
The 5B series is delivered with a tapered washer and a round nut.

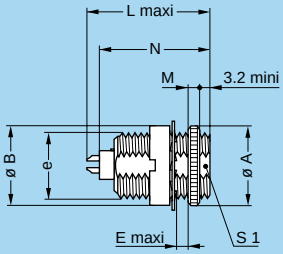

ESG Fixed socket with two round nuts, key (G) or keys (A…L), long threaded shell (back panel mounting)

Reference		Dimensions (mm)							
Model	Series	A	B	e	E	L	M	N[1)]	S1
ESG	00	9.5	9	M7x0.5	4.0	15.5	2	13.7	–
ESG	1B	14.0	14	M12x1.0	8.0	23.0	2	21.1	10.5

Panel cut-out: **P1** 1B series Panel cut-out: **P2** 00 series

Note: 1) maximum length with crimp contacts.

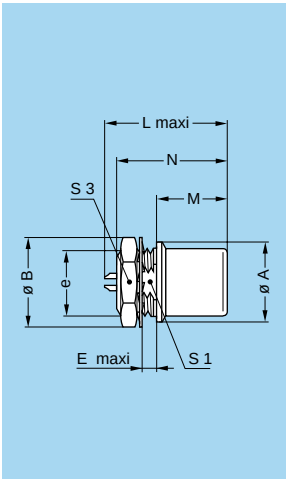

EHG Fixed socket, nut fixing, key (G) or keys (A…M and R), and protruding shell

Reference		Dimensions (mm)								
Model	Series	A	B	e	E	L	M	N[1)]	S1	S3
EHG	00	8.8	10.3	M7x0.5	2.0	15.5	8.5	13.7	6.3	9
EHG	0B	10.0	12.5	M9x0.6	2.5	19.5	12.5	19.1	8.2	11
EHG	1B	14.0	16.0	M12x1.0	4.2	21.7	12.0	20.8	10.5	14
EHG	2B	18.0	19.5	M15x1.0	5.2	22.7	12.5	24.3	13.5	17
EHG	3B	22.0	25.0	M18x1.0	4.2	30.7	12.5	27.8	16.5	22
EHG	5B	40.0	40.0	M35x1.0	2.5	43.5	28.5	40.3	33.5	–

Panel cut-out: **P1**

Note: 1) maximum length with crimp contacts.
The 5B series is delivered without locking washer or tapered washer and with a round nut.

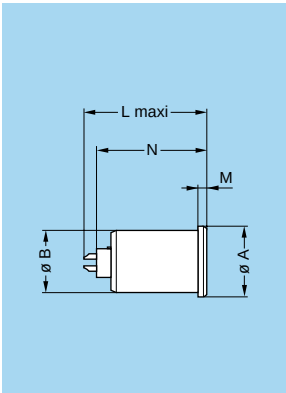

EJG Fixed socket, press or adhesive fit, key (G) or keys (A…M)

Reference		Dimensions (mm)				
Model	Series	A	B	L	M	N[1)]
EJG	0B	9.2	8.35	20.7	1.5	19.1
EJG	1B	12.5	11.20	23.0	1.5	21.1
EJG	2B	16.5	14.00	26.7	1.5	24.6

Panel cut-out: **P5**

Note: 1) maximum length with crimp contacts.

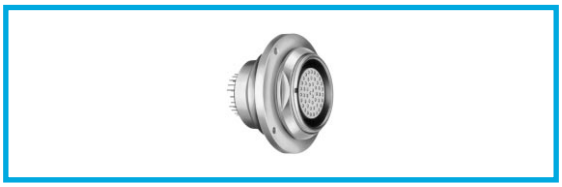

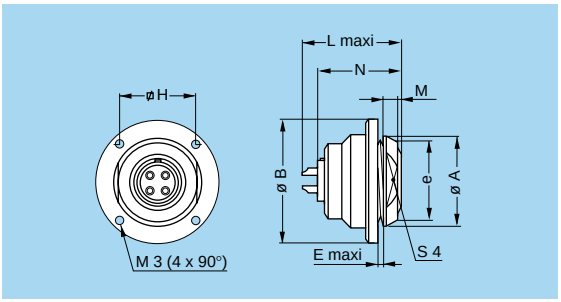

EBG Fixed socket, nut fixing, round flange, key (G) or keys (A…L and R), screw fixing (back panel mounting)

Reference		Dimensions (mm)								
Model	Series	A	B	e	E	H	L	M	N[1)]	S4
EBG	5B	41	54	M35x1.0	4.0	34	43.5	5.0	39.6	37

Panel cut-out: **P6**

Note: 1) maximum length with crimp contacts.

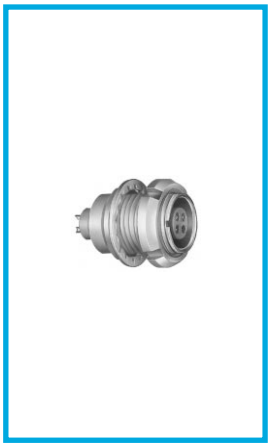

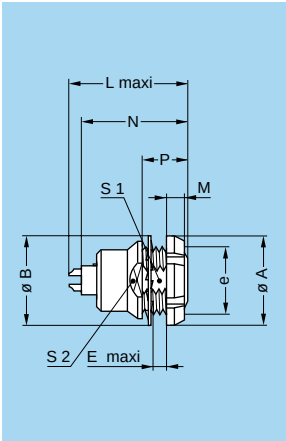

EEG Fixed socket, nut fixing, key (G) or keys (A…M and R) (back panel mounting)

Reference		Dimensions (mm)									
Model	Series	A	B	e	E	L	M	N[1)]	P	S1	S2
EEG	00	10	9.5	M7x0.5	2.3	15.5	2.5	13.7	6.0	6.3	7.5
EEG	0B	12	12.5	M9x0.6	2.4	20.7	2.5	19.1	6.3	8.2	9.0
EEG	1B	16	16.0	M12x1.0	6.0	23.0	3.5	21.1	11.0	10.5	13.0
EEG	2B	20	20.0	M15x1.0	3.0	26.7	3.5	24.6	9.0	13.5	15.0
EEG	3B	24	25.0	M18x1.0	5.0	30.7	4.5	28.1	12.0	16.5	20.0
EEG	5B	41	40.0	M35x1.0	13.5	43.5	5.0	39.6	19.5	33.5	38.0

Note: 1) maximum length with crimp contacts.
The 3B and 5B series are delivered with a conical nut.
The 5B series is delivered without locking washer or tapered washer.

Panel cut-out: **P1**

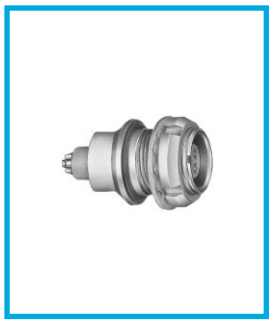

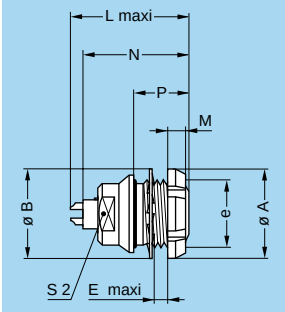

EFG Fixed socket, nut fixing, key (G) or keys (A…M), with two flats on the shell and O-ring
(back panel mounting)

Reference		Dimensions (mm)								
Model	Series	A	B	e	E	L	M	N[1)]	P	S2
EFG	0B	12	12.5	M9x0.6	5.5	20.7	2.5	19.1	9	8

Panel cut-out: **P2**

Note: 1) maximum length with crimp contacts.

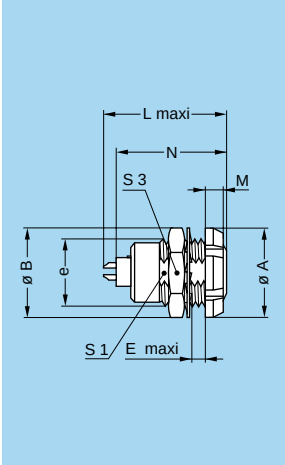

ECG Fixed socket with two nuts, key (G) or keys (A…M and R)
(back panel mounting)

Reference		Dimensions (mm)								
Model	Series	A	B	e	E	L	M	N[1)]	S1	S3
ECG	00	10	9.5	M7x0.5	4.3	13.7	2.5	13.7	6.3	9
ECG	0B	12	12.5	M9x0.6	5.5	20.7	2.5	19.1	8.2	11
ECG	1B	16	16.0	M12x1.0	6.0	23.0	3.5	21.1	10.5	14
ECG	2B	20	20.0	M15x1.0	6.5	26.7	3.5	24.6	13.5	17
ECG	3B	24	25.0	M18x1.0	9.0	30.7	4.5	28.1	16.5	22
ECG	4B	30	32.0	M25x1.0	10.0	35.7	4.5	32.6	23.5	30
ECG	5B	41	40.0	M35x1.0	9.0	43.5	5.0	39.6	33.5	–

Note: 1) maximum length with crimp contacts.
The 3B, 4B and 5B series are delivered with a conical nut.
The 5B series is delivered with a tapered washer and a round nut.

Panel cut-out: **P1**

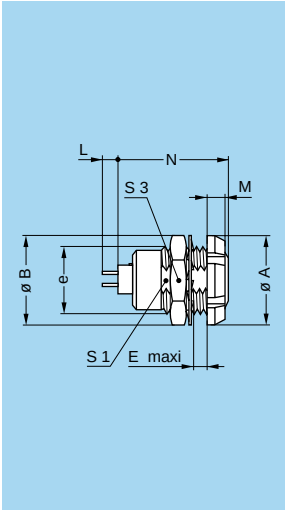

ECG Fixed socket with two nuts, key (G) or keys (A…F and R) and straight contact for printed circuit
(back panel mounting)

Reference		Dimensions (mm)							
Model	Series	A	B	e	E	M	N	S1	S3
ECG	00	10	9.5	M7x0.5	4.3	2.5	13.7	6.3	9
ECG	0B	12	12.5	M9x0.6	5.5	2.5	16.4	8.2	11
ECG	1B	16	16.0	M12x1.0	6.0	3.5	19.8	10.5	14
ECG	2B	20	20.0	M15x1.0	6.5	3.5	21.8	13.5	17
ECG	3B	24	25.0	M18x1.0	9.0	4.5	25.8	16.5	22
ECG	4B	30	32.0	M25x1.0	10.0	4.5	29.8	23.5	30
ECG	5B	41	40.0	M35x1.0	9.0	5.0	36.8	33.5	–

Panel cut-out: **P1**

PCB drilling pattern: **P15**

Note: this contact type is available for E●● socket models fitted with female contacts. Length «L» depends on the number of contacts, see table on page 192.
The 5B series is delivered with a tapered washer and a round nut.
The 3B, 4B and 5B series are delivered with a conical nut.

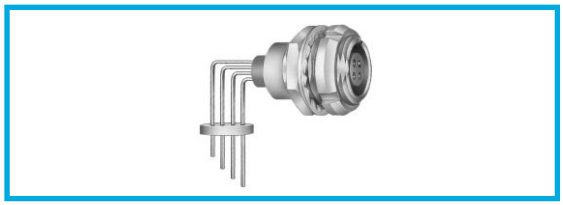

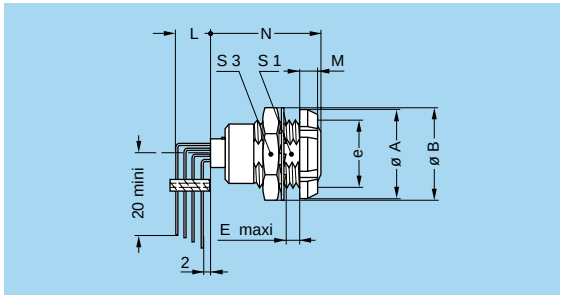

ECG Fixed socket with two nuts, key (G) or keys (A…F) with elbow (90°) contact for printed circuit
(back panel mounting)

Reference		Dimensions (mm)							
Model	Series	A	B	e	E	M	N max	S1	S3
ECG	0B	12	12.5	M9x0.6	2.4	2.5	18.3	8.2	11
ECG	1B	16	16.0	M12x1.0	6.0	3.5	20.3	10.5	14
ECG	2B	20	20.0	M15x1.0	6.5	3.5	22.3	13.5	17
ECG	3B	24	25.0	M18x1.0	9.0	4.5	25.8	16.5	22

Panel cut-out: **P1**

PCB drilling pattern: **P17**

Note: this female contact type is available for all back panel mounting socket models.
Length «L» depends on the number of contacts, see PCB drilling pattern on page 193.
For male contacts, sockets are available upon request, with J, K or L keys.
The 3B series is delivered with a conical nut.

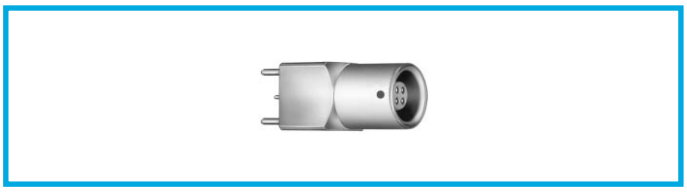

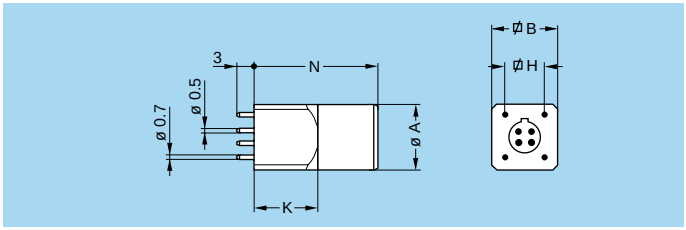

EZG Straight socket for printed circuit, key (G) or keys (A, B)

Reference		Dimensions (mm)				
Model	Series	A	B	H	K	N
EZG	00	6.8	7	5.08	7	14

PCB drilling pattern: P15 + P16

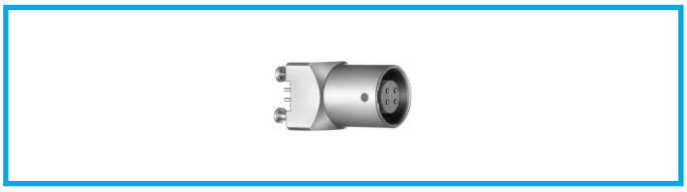

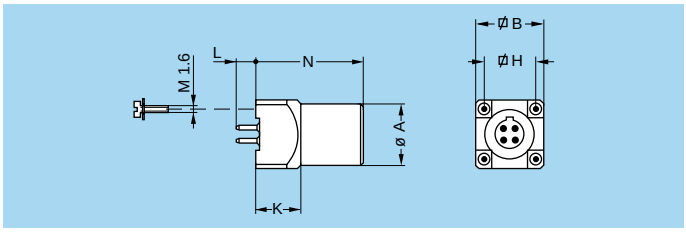

EZG Straight socket for printed circuit, key (G) or keys (A…F)

Reference		Dimensions (mm)				
Model	Series	A	B	H	K	N
EZG	0B	9	10	7.62	8	15.0
EZG	1B	11	12	7.62	8	19.0
EZG	2B	14	15	10.16	9	22.5

PCB drilling pattern: P15 + P16

Note:
Length «L» depends on the number of contacts, see table on page 192.

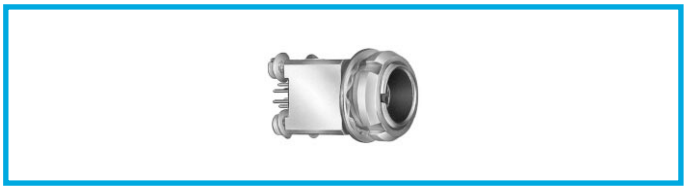

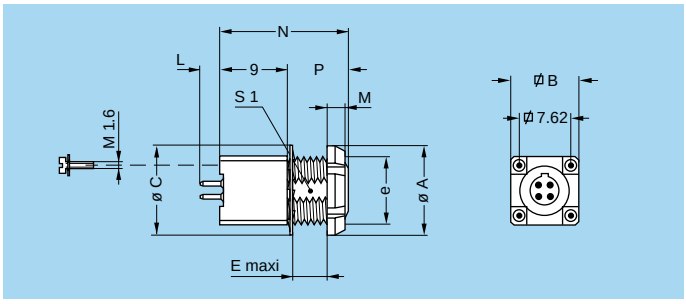

EYG Fixed socket for printed circuit, nut fixing, key (G) or keys (A…F)
(back panel mounting)

Reference		Dimensions (mm)								
Model	Series	A	B	C	e	E	M	N	P	S1
EYG	0B	12	10	12.5	M9x0.6	2.6	2.5	15	6	8.2
EYG	1B	14	12	16.0	M11x0.5	5.0	3.5	19	10	–

Panel cut-out: P1 0B series Panel cut-out: P10 1B series

PCB drilling pattern: P15 + P16

Note:
Length «L» depends on the number of contacts, see table on page 192.

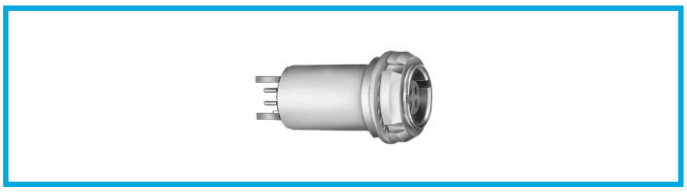

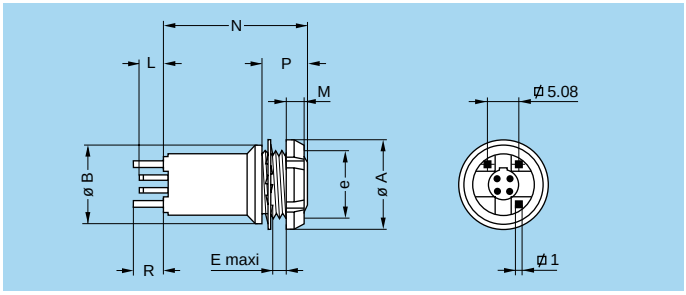

XPF Fixed socket, nut fixing, long shell, keys (F) for printed circuit
(back panel mounting)

Reference		Dimensions (mm)							
Model	Series	A	B	e	E	M	N	P	R
XPF	0B	12	11	M9x0.6	1.5	2.5	19	5	4

Panel cut-out: P2

PCB drilling pattern: P15 + P16

Note:
Length «L» depends on the number of contacts, see table on page 192.

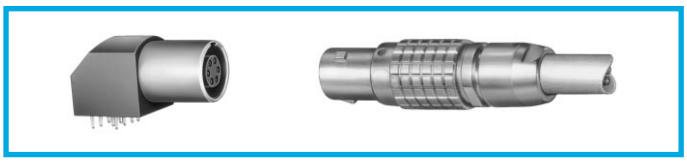

Elbow (90°) sockets for printed circuit

These socket models are fixed onto the printed circuit either by soldering the four pins, or with 4 screws (M1.6) replacing the pins.
EXG sockets are 2 nut fixing and are recommended in cases where a flexible printed circuit is used.

Technical Characteristics

Types

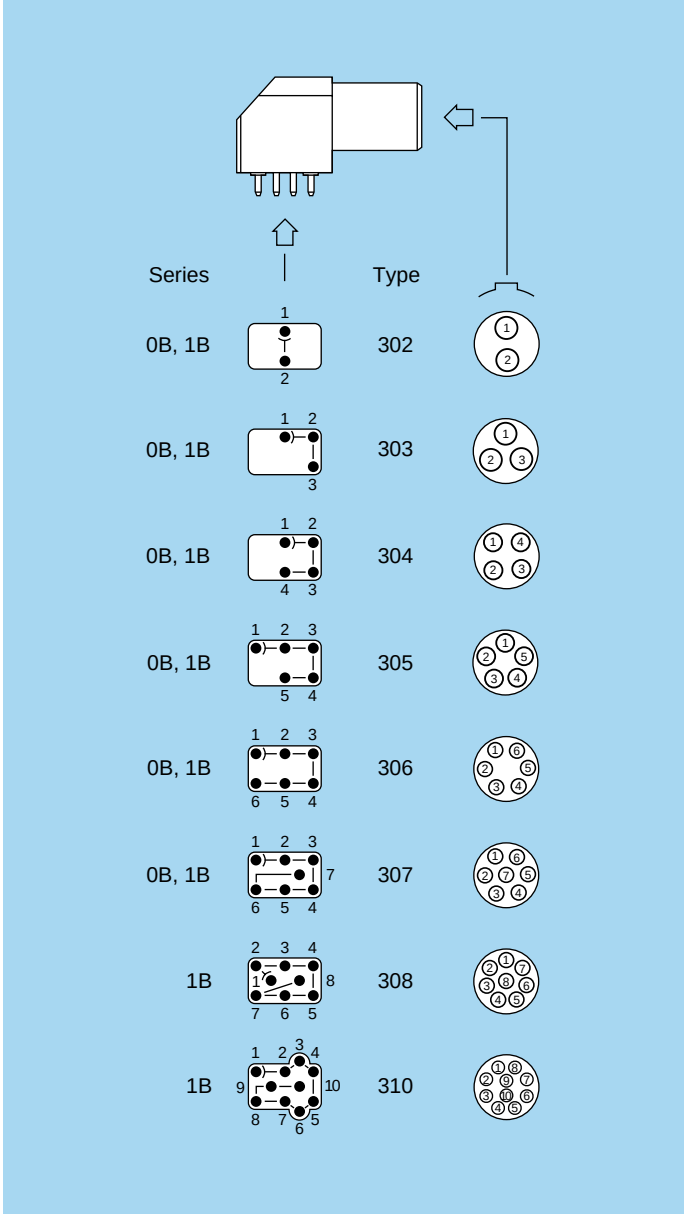

Materials and Treatment

Component	Material	Surface treat. (µm)		
		Cu	Ni	Au
Housing	PPS 1)	–		
	Brass	0.5	3	–
Metallic parts	Brass	0.5	3	–
Earthing crown	Bronze	0.5	3	–
Insulator	PEEK	–		
Female contact	Bronze	0.5	3	1.5

Note: 1) not used for all sizes.
The surface treatment standards are as follows:
– Nickel: FS QQ-N-290A. – Gold: ISO 4523

Electrical

Model	Series	Types	Test voltage (kV rms)1) Contact-contact	Test voltage (kV rms)1) Contact-shell	Rated current (A)
EPG-XBG	00	302-303-304	1.00	1.00	2.0
EPG-EXG	0B	302	1.45	1.20	4.5
EPG-EXG	0B	303	1.70	1.60	4.5
EPG-EXG	0B	304	1.30	1.10	4.5
EPG-EXG	0B	305	1.25	1.20	4.5
EPG-EXG	0B	306	1.25	1.20	2.5
EPG-EXG	0B	307	1.00	1.00	2.0
EPG-EXG	1B	302	1.70	1.45	4.5
EPG-EXG	1B	303	1.60	1.85	4.5
EPG-EXG	1B	304	1.70	1.80	4.5
EPG-EXG	1B	305	1.30	1.55	4.5
EPG-EXG	1B	306	1.35	1.45	4.5
EPG-EXG	1B	307	1.45	1.45	2.0
EPG-EXG	1B	308	1.30	1.30	2.0
EPG-EXG	1B	310	1.00	1.00	1.5
EPG	1B	314	1.00	1.30	1.0

Note: 1) see calculation method, caution and suggested standard on page 204.

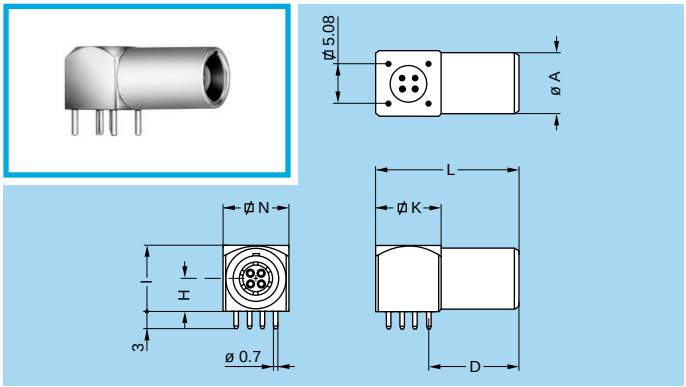

EPG Elbow (90°) socket for printed circuit, key (G) or keys (A, B)

Reference	Dimensions (mm)						
	A	D	H	I	K	L	N
EPG.00.302.NLN	6.8	11	3.5	7	7	17.5	7
EPG.00.303.NLN							
EPG.00.304.NLN							

PCB drilling pattern: **P18**

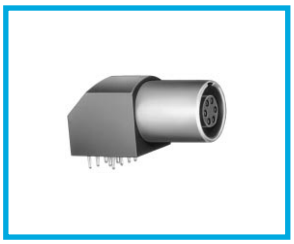

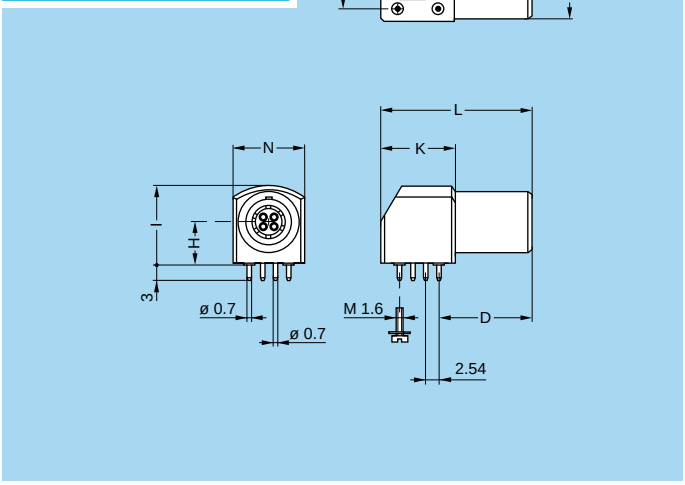

EPG Elbow (90°) socket for printed circuit, key (G) or keys (A…F) (solder or screw fixing)

Reference	Dimensions (mm)						
	A	D	H	I	K	L	N
EPG.0B.302.HLN	9	14.5	6.9	12.7	13.2	25	11.6
EPG.0B.303.HLN							
EPG.0B.304.HLN							
EPG.0B.305.HLN							
EPG.0B.306.HLN							
EPG.0B.307.HLN							
EPG.1B.302.HLN	11	16.5	7.7	14.0	13.2	27	12.6
EPG.1B.303.HLN							
EPG.1B.304.HLN							
EPG.1B.305.HLN							
EPG.1B.306.HLN							
EPG.1B.307.HLN							
EPG.1B.308.HLN							
EPG.1B.310.HLN							

PCB drilling pattern: **P19**

Note: to replace the 4 ground pins by 4 screws (M1.6) add an «S» to the end of the part number. (e.g.: EPG.0B.307.HLNS)

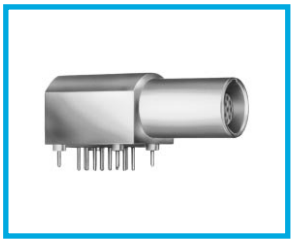

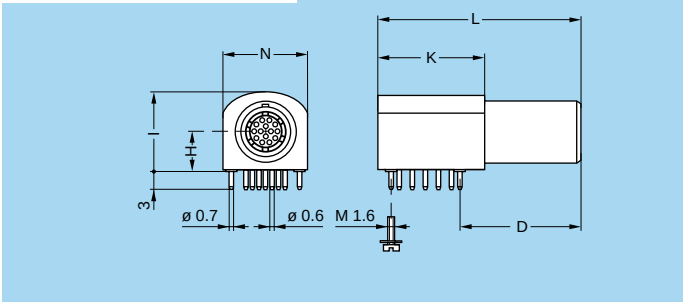

EPG Elbow (90°) socket for printed circuit, key (G) or keys (A…F) (solder or screw fixing)

Reference	Dimensions (mm)						
	A	D	H	I	K	L	N
EPG.1B.314.NLN	11	21	7.7	14.3	19	36	15.4

PCB drilling pattern: **P20**

Note: to replace the 4 ground pins by 4 screws (M1.6) add an «S» to the end of the part number. (e.g.: EPG.1B.314.NLNS)

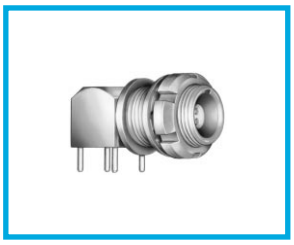

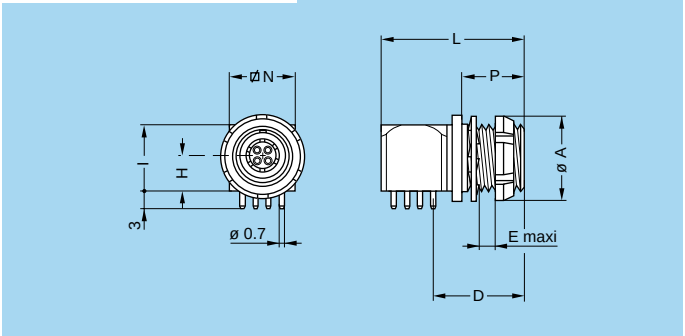

XBG Elbow (90°) socket fixing nut for printed circuit, key (G) or keys (A, B) (back panel mounting)

Reference	Dimensions (mm)										
	A	D	e	E	H	I	K	L	M	N	P
XBG.00.302.NLN	10	11.5	7x0.5	1.8	3.5	7	7	17.5	2.5	7	9
XBG.00.303.NLN											
XBG.00.304.NLN											

Panel cut-out: **P2**

PCB drilling pattern: **P18**

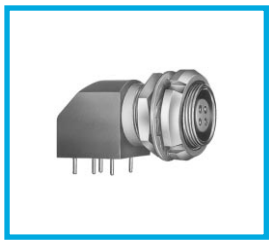

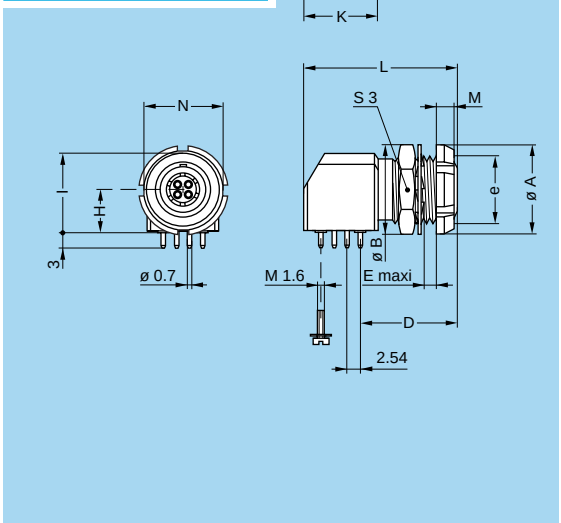

EXG Elbow (90°) socket for printed circuit with two nuts, key (G) or keys (A…F) (solder or screw fixing) (back panel mounting)

Reference	Dimensions (mm)											
	A	B	D	e	E	H	I	K	L	M	N	S3
EXG.0B.302.HLN	12	12.5	14.5	M9x0.6	6.0	6.9	12.7	13.2	25	2.5	10.5	11
EXG.0B.303.HLN												
EXG.0B.304.HLN												
EXG.0B.305.HLN												
EXG.0B.306.HLN												
EXG.0B.307.HLN												
EXG.1B.302.HLN	14	15.0	16.5	M11x0.5	7.5	7.7	14.0	13.2	27	3.5	14.0	13
EXG.1B.303.HLN												
EXG.1B.304.HLN												
EXG.1B.305.HLN												
EXG.1B.306.HLN												
EXG.1B.307.HLN												
EXG.1B.308.HLN												
EXG.1B.310.HLN												

Panel cut-out: **P2** 0B series

Panel cut-out: **P10** 1B series

PCB drilling pattern: **P19**

Note: to replace the 4 ground pins by 4 screws (M1.6) add an «S» to the end of the part number. (e.g.: EXG.0B.307.HLNS).

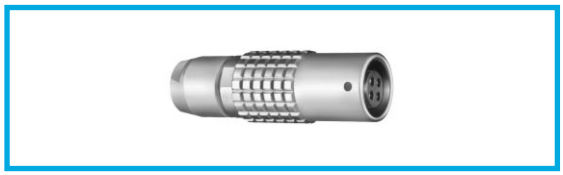

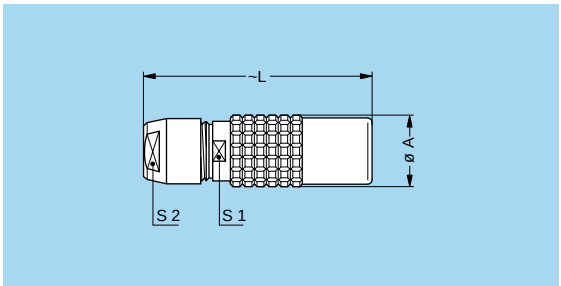

PHG Free socket, key (G) or keys (A…M and R), cable collet

Reference		Dimensions (mm)			
Model	Series	A	L	S1	S2
PHG	00[1)]	6.4	27.0	5.5	5
PHG	0B	9.5	35.5	8.0	7
PHG	1B	12.5	40.5	10.0	9
PHG	2B	16.5	47.0	13.0	12
PHG	3B	19.0	56.0	15.0	14
PHG	4B	24.4	73.0	21.0	20
PHG	5B	34.2	99.0	31.0	30

Note: [1)] the surface design of the 00 series is different.

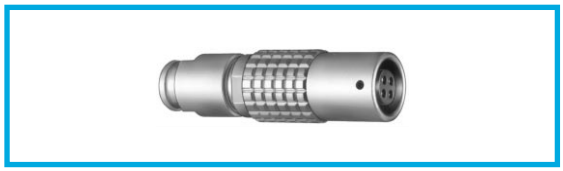

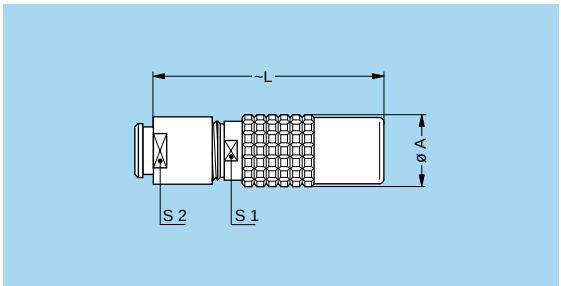

PHG Free socket, key (G) or keys (A…M), cable collet and nut for fitting a bend relief

Reference		Dimensions (mm)			
Model	Series	A	L	S1	S2
PHG	00[1)]	6.4	26.0	5.5	5
PHG	0B	9.5	34.5	8.0	7
PHG	1B	12.5	39.5	10.0	9
PHG	2B	16.5	46.0	13.0	12
PHG	3B	19.0	54.5	15.0	15
PHG	4B	24.4	69.0	21.0	20

Note: [1)] the surface design of the 00 series is different.
The bend relief must be ordered separately (see page 175).

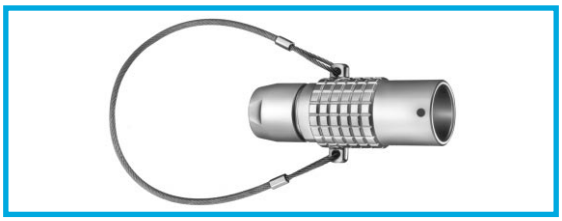

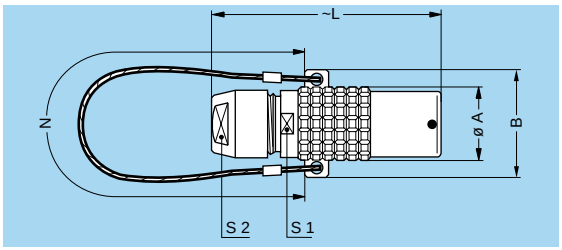

PNG Free socket, nut fixing, key (G) or keys (A…L and R), cable collet with lanyard release

Reference		Dimensions (mm)					
Model	Series	A	B	L	N	S1	S2
PNG	1B	12.5	20.0	40.5	140	10	9
PNG	2B	16.5	24.2	47.0	160	13	12
PNG	3B	19.0	26.6	56.0	190	15	14
PNG	4B	26.0	36.2	73.0	230	21	20
PNG	5B	36.0	48.0	99.0	300	31	30

Note: cable material: stainless steel with PVC sheath

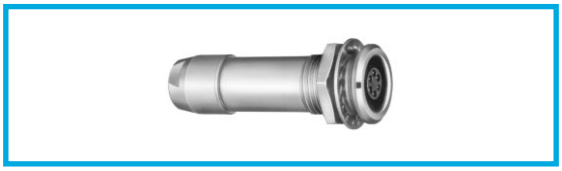

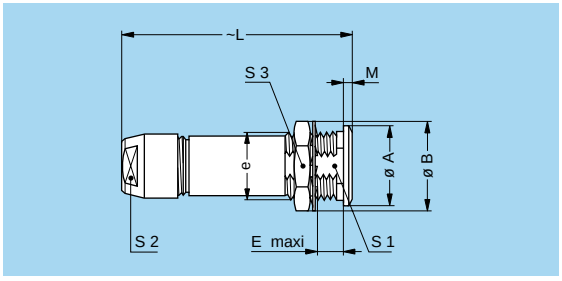

PKG Fixed socket, nut fixing, key (G) or keys (A…M and R), cable collet

Reference		Dimensions (mm)								
Model	Series	A	B	e	E	L	M	S1	S2	S3
PKG	00	8	10.3	M7x0.5	6.5	27.0	1.0	6.3	5	9
PKG	0B	10	12.5	M9x0.6	7.0	35.5	1.2	8.2	7	11
PKG	1B	14	16.0	M12x1.0	7.5	40.5	1.5	10.5	9	14
PKG	2B	18	19.5	M15x1.0	8.5	47.0	1.8	13.5	12	17
PKG	3B	22	25.0	M18x1.0	11.5	56.0	2.0	16.5	14	22
PKG	4B	28	32.0	M25x1.0	12.0	73.0	2.5	23.5	20	30
PKG	5B	40	40.0	M35x1.0	11.0	99.0	3.0	33.5	30	–

Note:
the 5B series is delivered with a tapered washer and a round nut.

Panel cut-out: **P1**

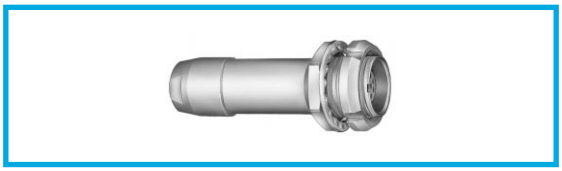

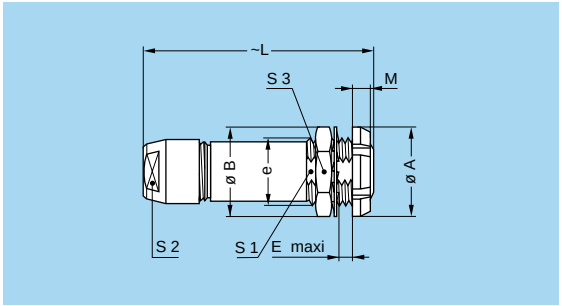

PFG Fixed socket, with two nuts, key (G) or keys (A…M and R), cable collet (back panel mounting)

Reference		Dimensions (mm)								
Model	Series	A	B	e	E	L	M	S1	S2	S3
PFG	00	8	10.3	M7x0.5	5.3	27.0	2.5	6.3	5	9
PFG	0B	12	12.5	M9x0.6	5.0	35.5	2.5	8.2	7	11
PFG	1B	16	16.0	M12x1.0	5.0	40.5	3.5	10.5	9	14
PFG	2B	20	20.0	M15x1.0	6.5	47.0	3.5	13.5	12	17
PFG	3B	24	25.0	M18x1.0	9.0	56.0	4.5	16.5	14	22
PFG	4B	30	32.0	M25x1.0	11.0	73.0	4.5	23.5	20	30
PFG	5B	41	40.0	M35x1.0	10.0	99.0	5.0	33.5	30	–

Note:
the 3B, 4B and 5B series are delivered with a conical nut.
The 5B series is delivered with a tapered washer and a round nut.

Panel cut-out: **P1**

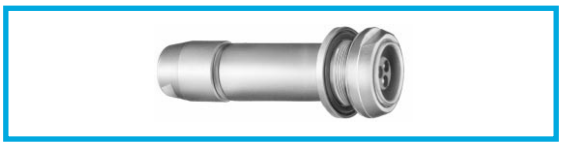

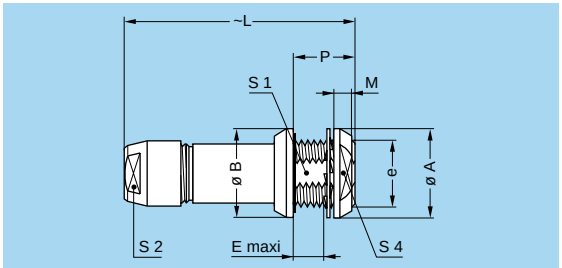

PEG Fixed socket, nut fixing, key (G) or keys (A…L), cable collet (back panel mounting)

Reference		Dimensions (mm)									
Model	Series	A	B	e	E	L	M	S1	S2	S4	P
PEG	3B	24	22	M18x1.0	5.0	56	4.5	16.5	14	20	12
PEG	4B	32	34	M25x1.0	12.5	73	5.0	23.5	20	27	20

Panel cut-out: **P1**

Note: the 4B series has an o-ring on the flange.

R●● Fixed coupler, nut fixing, key (G) or keys (A and J) at the flange end and keys (J, K or M) at the other end

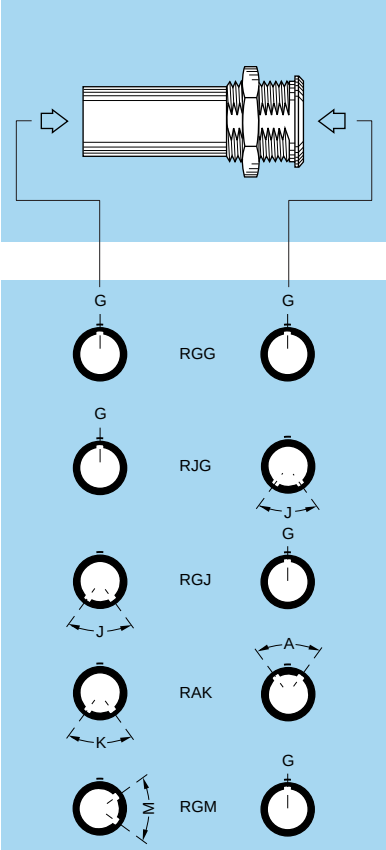

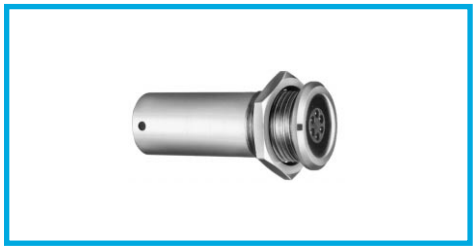

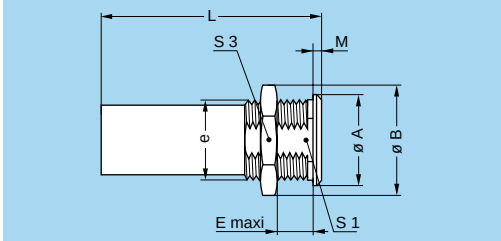

Reference		Contacts	Dimensions (mm)							
Model	Series	Type	A	B	e	E	L	M	S1	S3
RGG 1)	0B	female – female	12	13.8	M10x0.75	8.0	34	2.0	9.0	12
RGG 2)	0B	female – female	12	13.8	M10x0.75	8.0	43	2.0	9.0	12
RJG	0B	male – female	12	13.8	M10x0.75	8.0	34	2.0	9.0	12
RGJ		female – male								
RAK		female – male								
RGM		female – male								
RGG 2)	1B	female – female	16	19.5	M14x1.00	8.5	47	2.5	12.5	17
RJG	1B	male – female	16	19.5	M14x1.00	8.5	39	2.5	12.5	17
RGJ		female – male								
RJG	2B	male – female	20	21.8	M16x1.00	12.0	44	4.0	15.0	19
RGJ		female – male								
RGJ	3B	female – male	25	27.5	M20x1.00	32.0	53	4.0	18.5	24
RGJ	4B	female – male	34	32.0	M25x1.00	50.0	65	4.0	23.5	30

Panel cut-out: **P4**

Note: 1) only available with two contacts. 2) only available with three contacts.
For this fixed coupler, the first contact type mentioned is always the one at the flange end. On request, these couplers can be produced in other series, with other keys.

Models with microswitch

Some sockets are available fitted with a microswitch. The microswitch is independent from the electrical contacts of the socket. The introduction of a plug into the socket activates the microswitch.

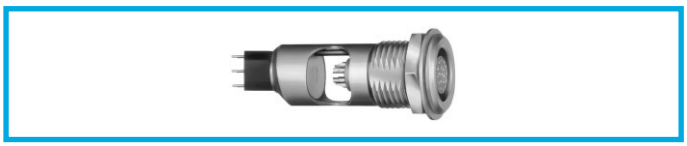

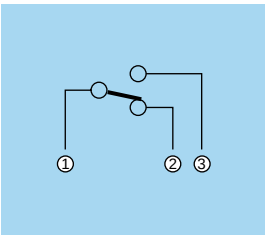

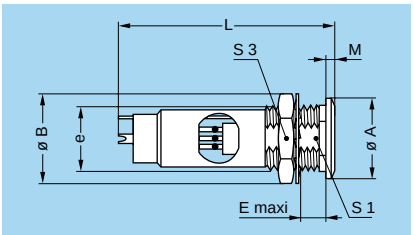

EMG Fixed socket, nut fixing, microswitch, key (G) or keys (A…L)

Reference		Dimensions (mm)							
Model	Series	A	B	e	E	L	M	S1	S3
EMG	0B	10	12.5	M9x0.6	5.5	35	1.2	8.2	11
EMG	1B	14	16.0	M12x1.0	7.0	38	1.5	10.5	14

Panel cut-out: **P1**

Note: only available with 2 or 3 contacts (type 302, 303), in 0B series
Only available with 3 or 6 contacts (type 303, 306), in 1B series.
For the microswitch: maximum operating voltage: 270 Veff/Vdc,
rated current: 8.5A/0.5A.

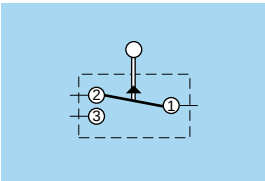

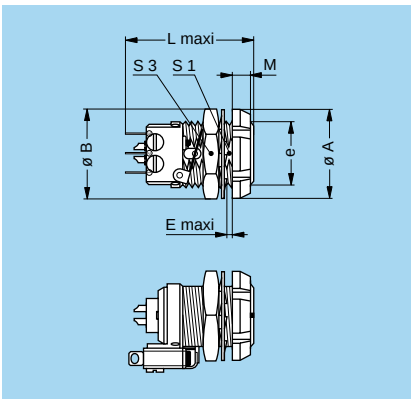

EMG Fixed socket, with two nuts, microswitch, key (G) or keys (A…L)

Reference		Dimensions (mm)							
Model	Series	A	B	e	E	L	M	S1	S3
EMG	2B	20	19.5	M15x1.0	2.2	26.7	3.5	13.5	17

Panel cut-out: **P1**

Note: for the microswitch: maximum operating voltage: 250 Veff/Vdc,
rated current: 7A/0.25A.

Bridge plug

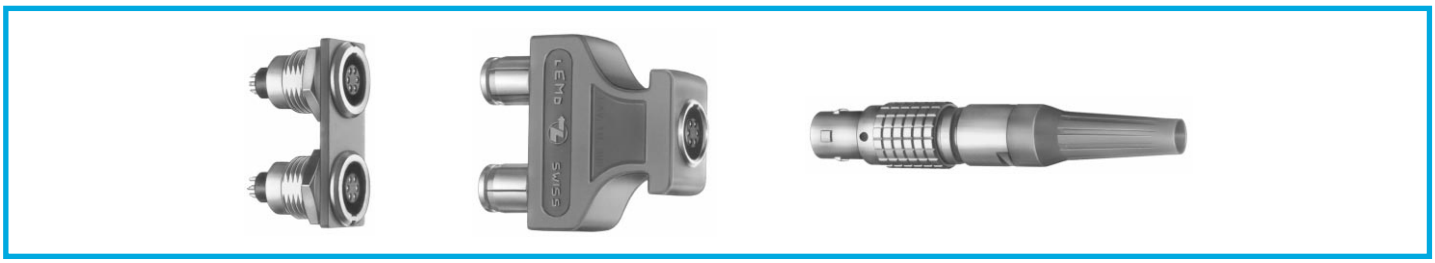

The LEMO audio-video connector system consists of two sockets, with or without microswitch, a bridge plug with or without output monitoring and a plug with or without bend relief. This system is already widely used in telecommunication equipment and in radio and television broadcasting centres.
The connectors of this system are fully compatible with all other connector models of the same series and type. However, when designing systems it should be considered that the distance between the assembled nut-fixing models should correspond to that between the outputs of the bridge plug. In order to provide the user with a coding system, the bridge plug housing, the double panel washers and the bend reliefs are available in nine colours.

Technical Characteristics

Mechanical and Climatical

Characteristics	Value	Standard
Endurance	> 1000 cycles	IEC 60512-5 test 9a
Working temperature	maximum 90° C	

Materials and Treatment

Component	Material	Surface treat. (µm)			
		Cu	Ni	Cr	Au
Plastic housing	Polyamide	–			
Metallic parts	Brass	0.5	3	–	–
	Brass	0.5	3	0.3	–
Insulator	PEEK	–			
Male contact	Brass	0.5	3	–	1.0
Female contact	Bronze	0.5	3	–	1.5

Note: the surface treatment standards are as follows:
– Nickel: FS QQ-N-290A
– Chrome: FS QQ-C-320B
– Gold: ISO 4523

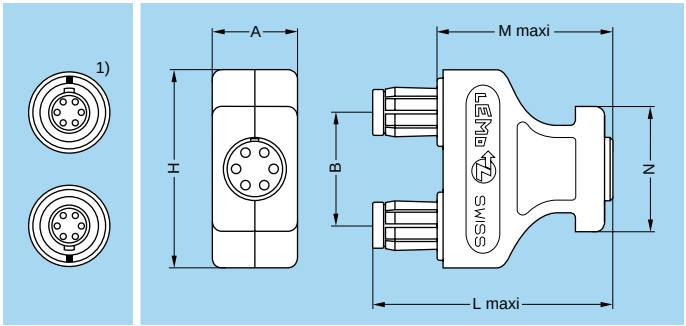

Electrical

Characteristics	Value	Standard
Contact resistance	< 6 mΩ	IEC 60512-2 test 2a

Characteristics	Series	Audio-Mono	Audio-Stereo	Test voltage (kV rms) 1) 2)	Rated current (A)
CFF.0B.302.PLCG	0B	●	–	1.05	4
CRG.0B.302.PLEG	0B	●	–	1.05	4
CFF.0B.303.PLCG	0B	●	–	0.80	4
CRG.0B.303.PLEG	0B	●	–	0.80	4
CRG.0B.306.PLEG	0B	–	●	0.40	2
CFF.1B.303.PLCG	1B	●	–	1.25	5
CRG.1B.303.PLEG	1B	●	–	1.25	5
CFF.1B.306.PLCG	1B	–	●	0.80	3
CRG.1B.306.PLEG	1B	–	●	0.80	3

Note: the last letter of the part number indicates the colour of the housing. Ex. G (standard) is grey. To obtain another colour, replace this letter by the letter corresponding to the selected colour (see table on page 66).
1) **see calculation method, caution and suggested standard on page 204.**
2) lowest measured value; contact to contact or contact to shell.

CFF Bridge plug with two non-latching plugs

CRG Bridge plug with two non-latching plugs, and monitoring socket, key (G) or keys (A…M)

Reference		Dimensions (mm)					
Model	Series	A	B	H	L	M	N
CFF-CRG	0B	13.5	14	27.5	37.2	27.2	22.5
CFF-CRG	1B	15.0	20	35.0	42.0	31.0	22.0

Note:
1) sockets are to be mounted with the keys mounted on the opposite side.

Plugs with parallel sockets

These plug models have been designed to divide one or more signals originating from the same source to two different points. They are used in various fields of application, particularly in audio signal transmission.

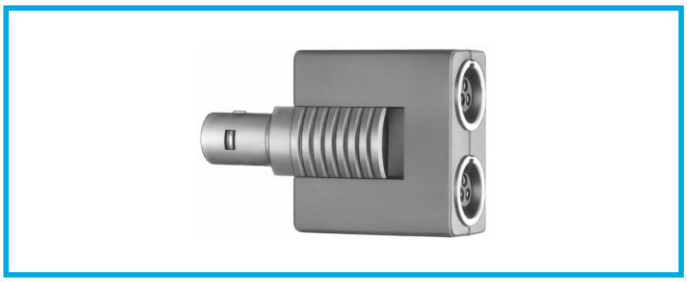

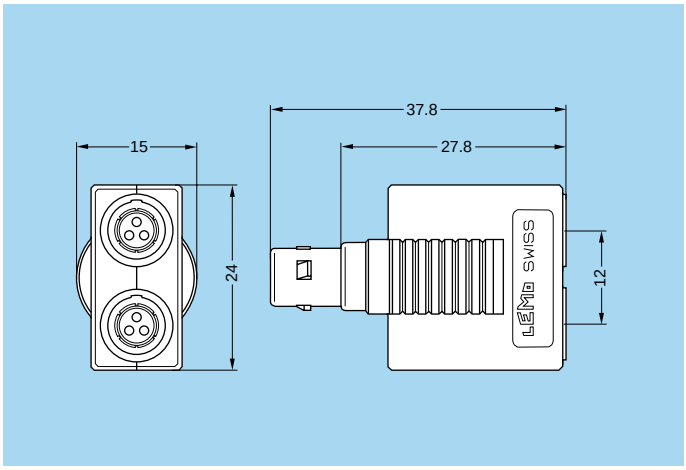

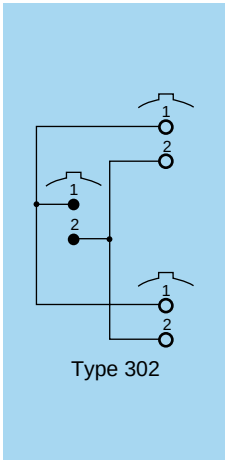

Type 302

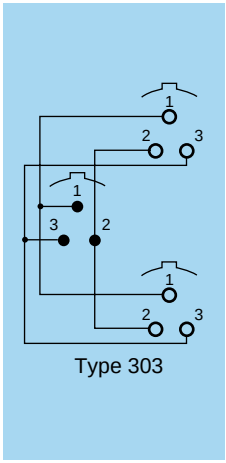

Type 303

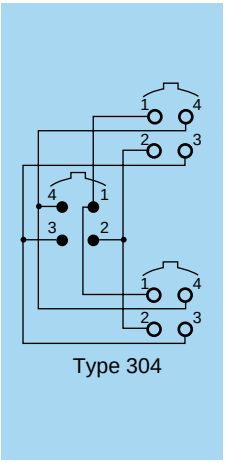

Type 304

FTG Straight plug, key (G) and two parallel sockets

Reference
FTG.0B.302.PLFG
FTG.0B.303.PLFG
FTG.0B.304.PLFG

Technical Characteristics

Electrical

Model	Number of contacts	Test voltage (kV rms) 1) 2)	Nominal current (A)
FTG.0B.302.PLFG	2	1.05	4
FTG.0B.303.PLFG	3	0.80	4
FTG.0B.304.PLFG	4	0.80	3

Materials and Treatment

Component	Material	Surface treat. (µm)			
		Cu	Ni	Cr	Au
Plastic housing	Polyamide	–			
Metallic parts	Brass	0.5	3	–	–
	Special brass	0.5	3	0.3	–
Insulator	PEEK	–			
Male contact	Brass	0.5	3	–	1.0
Female contact	Bronze	0.5	3	–	1.5

Note:
1) **see calculation method, caution and suggested standard on page 204.**
2) lowest measured value; contact to contact or contact to shell.
The surface treatment standards are as follows:
– Nickel: FS QQ-N-290A
– Chrome: FS QQ-C-320B
– Gold: ISO 4523

Plastic housing models

FGG, FGY, ENG and ENY plug and socket models are available with the outer shell and collet nut made with various insulating materials.
These connectors are particularly recommended for all applications requiring maximum electrical insulation when mated. The design, including a latch sleeve and a metal earthing crown, guarantees EMC screening efficiency to meet most requirements.

Technical Characteristics

Mechanical and Climatical

Characteristics	Value			Standard
	PEEK	PSU	PPSU	
Colour	natural (beige)	white or grey	cream	–
Endurance	> 5000 cycles	> 5000 cycles	> 5000 cycles	IEC 60512-5 test 9a
Humidity	up to 95% at 60° C			–
Temperature range	- 50° C/+250° C	- 50° C/+150° C	- 50° C/+180° C	–
Sterilization resistance [1)]	> 200 cycles	~20 cycles	> 100 cycles	IEC 60601-1 § 44.7
Resistance to solvents	very good	limited	good	–

Note: [1)] Steam sterilization

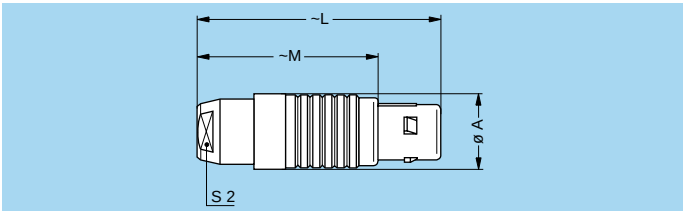

FGG Straight plug, key (G or J), cable collet, PEEK outer shell

Reference		Dimensions (mm)			
Model	Series	A	L	M	S2
FGG	1B	13.5	43.0	32.0	10
FGG	3B	19.0	62.0	47.0	15
FGG	4B	26.0	78.5	60.5	20

Note: model also available with a nut for fitting a bend relief

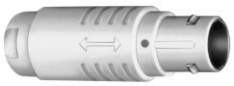

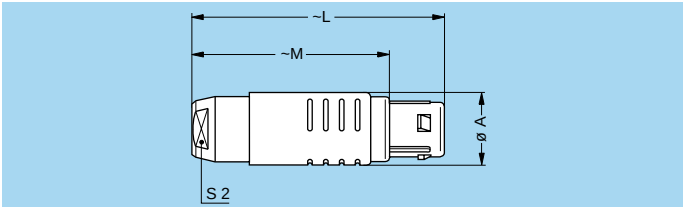

FGY Straight plug, keys (Y), cable collet and PSU or PPSU outer shell

Reference		Dimensions (mm)			
Model	Series	A	L	M	S2
FGY	2B	16.5	50.5	39.5	13
FGY	3B	19.0	58.0	43.0	15

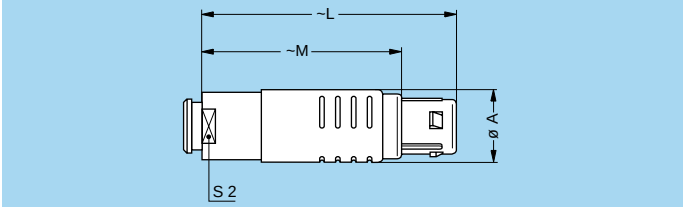

FGY Straight plug, keys (Y), cable collet and PSU or PPSU outer shell and nut for fitting a bend relief

Reference		Dimensions (mm)			
Model	Series	A	L	M	S2
FGY	2B	16.5	49.5	38.5	13
FGY	3B	19.0	56.5	41.5	15

Note: the bend relief must be ordered separately (see page 175)

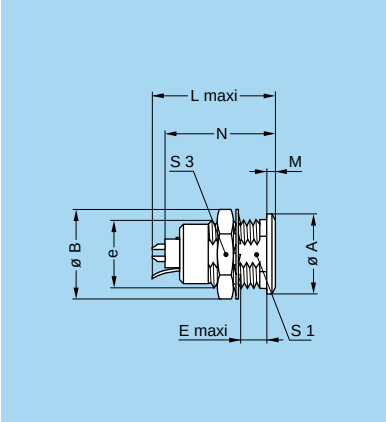

ENG Fixed socket with earthing tag, nut fixing, key (G or J), PEEK outer shell

Reference		Dimensions (mm)								
Model	Series	A	B	e	E	L	M	N[1)]	S1	S3
ENG	1B	14	16.0	M12x1.0	7.5	23.0	1.5	21.1	10.5	14
ENG	3B	22	25.0	M18x1.0	11.5	30.7	2.0	28.1	16.5	22
ENG	4B	28	32.0	M25x1.0	12.0	35.7	2.5	32.6	23.5	30

Panel cut-out: **P1**

Note: [1)] maximum length with crimp contacts.

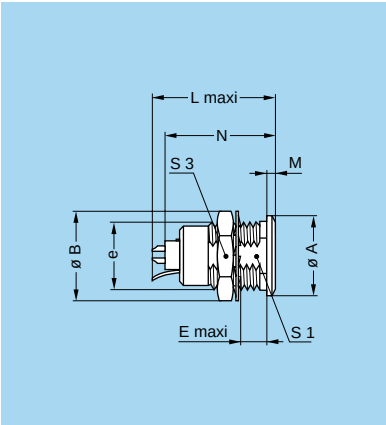

ENY Fixed socket with earthing tag, nut fixing, keys (Y), PSU or PPSU outer shell

Reference		Dimensions (mm)								
Model	Series	A	B	e	E	L	M	N[1)]	S1	S3
ENY	2B	18	19.5	M15x1.0	8.5	26.7	1.8	24.6	13.5	17
ENY	3B	22	25.0	M18x1.0	11.5	30.7	2.0	28.1	16.5	22

Panel cut-out: **P1**

Note: [1)] maximum length with crimp contacts.

Note: other models with plastic outer shell are available on request.

Watertight or vacuumtight models

YHG, HGG, HCG, HNG, HHG, HMG and S●● plug, socket or coupler models allow the device on which they are fitted to reach a protection index of IP68 as per IEC 60529. They are fully compatible with plugs of the same series and are widely used for portable radios, military, laboratory equipment, aviation, etc.
These models are identified by a letter «P» at the end of the reference.
Most of these models are also available in a vacuumtight version. Such models are identified by an additional letter «V» at the end of the part number (certificate on request).
Epoxy resin is used to seal these models.
Please refer to page 8 to locate the chapter on selecting watertight connectors.

Part number example:
Watertight socket: HGG.1B.306.CLLP
Vacuumtight socket: HGG.1B.306.CLLPV

Technical Characteristics

Mechanical and Climatical

Charateristics		Value	Standard
Endurance		> 5000 cycles	IEC 60512-5 test 9a
Humidity		up to 95% at 60° C	
Temperature range		- 20° C/+80° C	
Salt spray corrosion test		> 144h	IEC 60512-6 test 11f
Protection index (mated)		IP 68	IEC 60529
Climatical category		20/80/21	IEC 60068-1
Leakage rate (He)[1]		$< 10^{-6}$ mbar.l.s^{-1}	IEC 60512-7 test 14b
Maximum operating pressure[2]	00	60 bars	IEC 60512-7 test 14d
	0B	60 bars	
	1B	60 bars	
	2B	40 bars	
	3B	30 bars	
	4B	15 bars	
	5B	5 bars	

Note:
[1] only for vacuumtight models.
[2] this value corresponds to the maximum allowed pressure difference for the assembled socket.

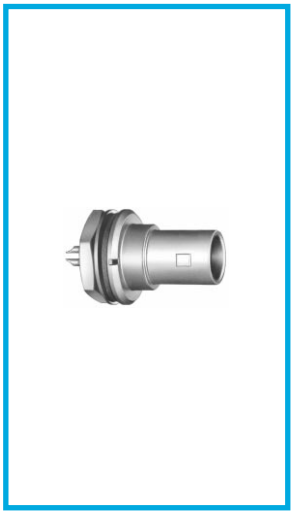

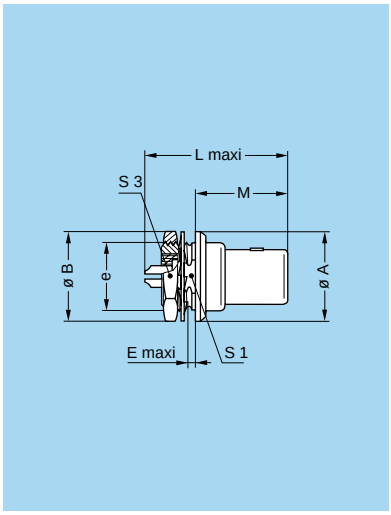

YHG Fixed plug, nut fixing, non-latching, key (G) or keys (A…M)

Reference		Dimensions (mm)							
Model	Series	A	B	e	E	L	M	S1	S3
YHG	0B	14.0	12.5	M9x0.6	2.5	21.2	14.6	8.2	11
YHG	1B	16.0	16.0	M12x1.0	4.5	25.0	16.4	10.2	14
YHG	2B	19.5	19.5	M15x1.0	4.0	31.5	18.2	13.5	17
YHG	3B	22.0	25.2	M18x1.0	5.0	34.0	22.4	16.5	22

Panel cut-out: **P9**

Note: this model does not include an O-ring behind the flange, it ensures only IP61 protection index. Consequently, it is not vacuumtight. Watertightness (when mated) is only ensured with HHG and HCG sockets.

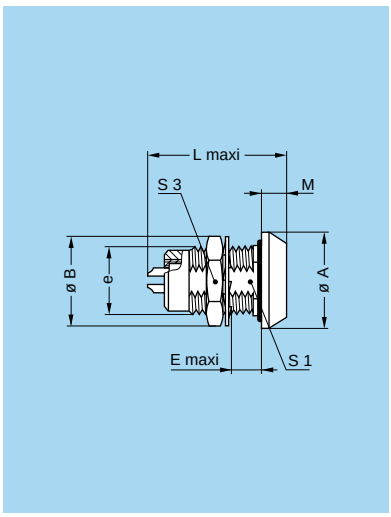

HGG Fixed socket, nut fixing, key (G) or keys (A…M and R), watertight or vacuumtight

Reference		Dimensions (mm)							
Model	Series	A	B	e	E	L	M	S1	S3
HGG	00	11	10.3	M7x0.5	8.0	18.3	1.5	–	9
HGG	0B	13	12.5	M9x0.6	7.0	20.7	3.0	8.2	11
HGG	1B	18	16.0	M12x1.0	7.0	26.0	4.5	10.5	14
HGG	2B	20	19.5	M15x1.0	8.0	29.7	4.0	13.5	17
HGG	3B	25	25.0	M18x1.0	11.5	36.2	4.0	16.5	22
HGG	4B	34	32.0	M25x1.0	11.0	44.7	4.0	23.5	30
HGG	5B	45	40.0	M35x1.0	11.0	51.7	5.0	33.5	–

Panel cut-out: **P9**

Note: the 5B series is delivered with a tapered washer and a round nut.

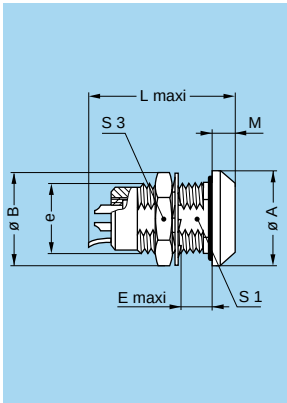

HNG Fixed socket, nut fixing, with earthing tag, key (G) or keys (A…M), watertight or vacuumtight

Reference		Dimensions (mm)							
Model	Series	A	B	e	E	L	M	S1	S3
HNG	0B	13	12.5	M9x0.6	7	20.7	3	8.2	11

Panel cut-out: **P9**

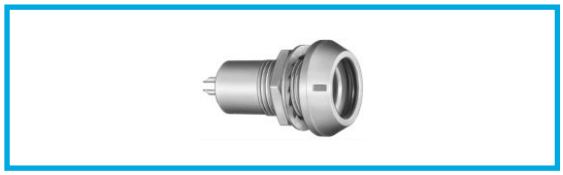

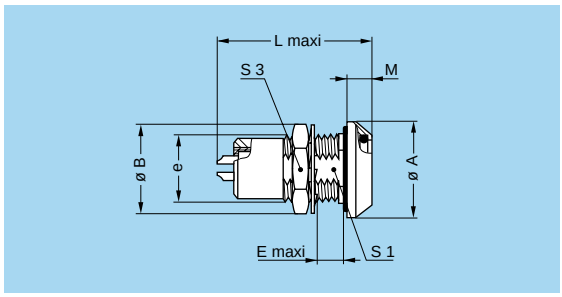

HHG Fixed socket, nut fixing, key (G) or keys (A…M), watertight or vacuumtight (watertight when mated)

Reference		Dimensions (mm)							
Model	Series	A	B	e	E	L	M	S1	S3
HHG	0B	13	12.5	M9x0.6	7.0	23.7	4.8	8.2	11
HHG	1B	18	16.0	M12x1.0	7.0	29.7	5.2	10.5	14
HHG	2B	22	19.5	M15x1.0	8.0	33.7	6.0	13.5	17
HHG	3B	25	25.2	M18x1.0	11.5	41.4	7.2	16.5	22

Panel cut-out: **P9**

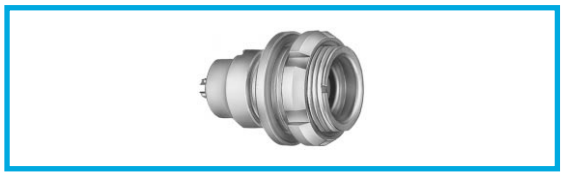

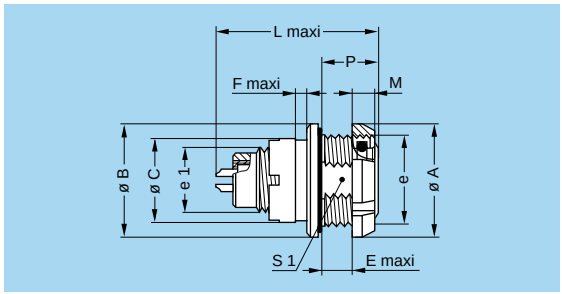

HCG Fixed socket, nut fixing, key (G) or keys (A…M), watertight or vacuumtight (watertight when mated) (back panel mounting)

Reference		Dimensions (mm)										
Model	Series	A	B	C	e	e1	E	F	L	M	P	S1
HCG	0B	18	18	12.0	M14x1.0	M9x0.6	3.9	1.0	23.7	3.5	7.5	12.5
HCG	1B	20	20	14.5	M16x1.0	M12x1.0	6.2	2.0	29.7	3.5	10.0	14.5
HCG	2B	24	24	17.5	M19x1.0	M14x1.0	6.7	1.5	33.7	3.5	11.3	17.0

Panel cut-out: **P3**

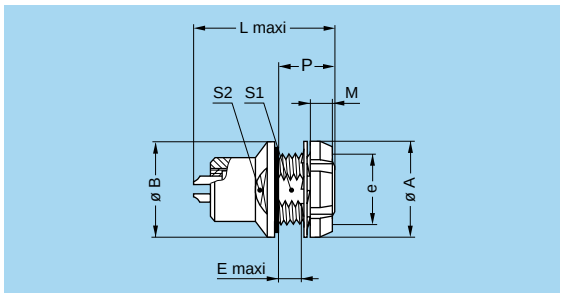

HEG Fixed socket, nut fixing, key (G) or keys (A…M), watertight or vacuumtight (back panel mounting)

Reference		Dimensions (mm)								
Model	Series	A	B	e	E	L	M	P	S1	S2
HEG	2B	20	20	M15x1.0	5.4	33.7	3.5	9.6	13.5	15

Panel cut-out: **P9**

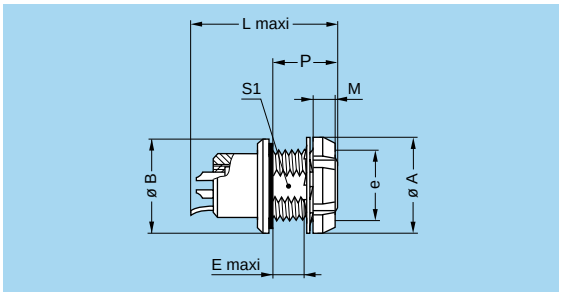

HMG Fixed socket with earthing tag, nut fixing, key (G) or keys (A…M), watertight or vacuumtight
(back panel mounting)

Reference		Dimensions (mm)							
Model	Series	A	B	e	E	L	M	P	S1
HMG	0B	12	13	M9x0.6	4.7	20.7	2.5	9.0	8.2
HMG	1B	16	18	M12x1.0	5.5	26.0	3.5	11.0	10.5
HMG	3B	24	25	M18x1.0	7.5	36.2	4.5	13.6	16.5

Panel cut-out: **P9**

Note: the 3B series is delivered with a conical nut.

S●● Fixed coupler, nut fixing, key (G) or keys (A, B, J, K and L) at the flange end and key (G) or keys (A, B, J, K and L) at the other end, watertight or vacuumtight

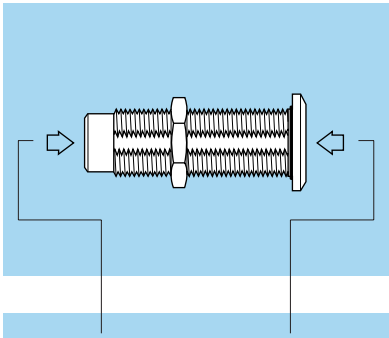

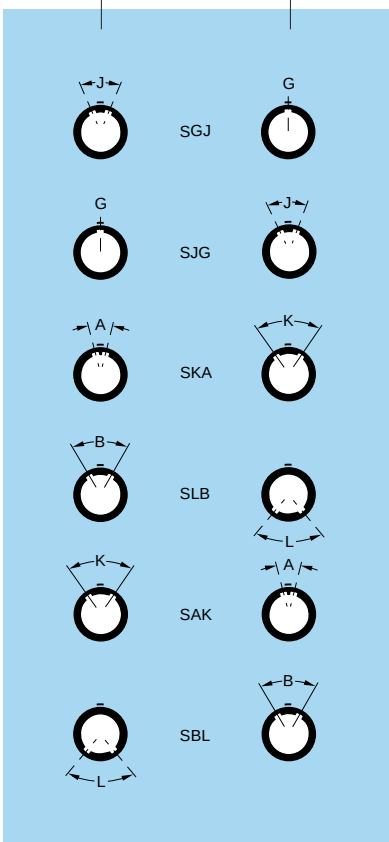

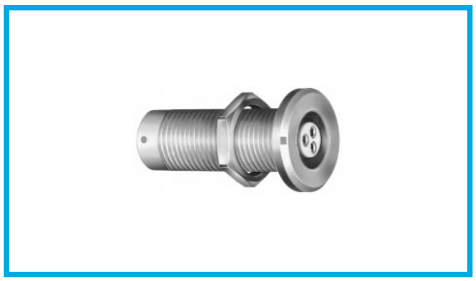

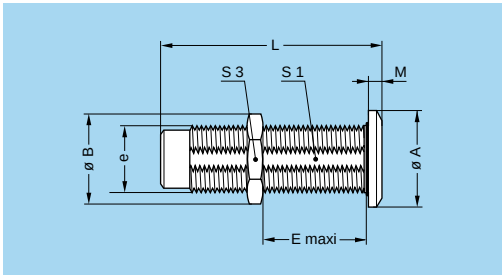

Reference		Contacts	Dimensions (mm)							
Model	Series	Type	A	B	e	E	L	M	S1	S3
SGJ	0B	female – male	14	13.8	M10x0.75	17	34	2.0	9.0	12
SJG		male – female								
SGJ	1B	female – male	17	16.0	M12x1.00	28	39	2.5	10.5	14
SJG		male – female								
SGJ	2B	female – male	20	21.8	M16x1.00	25	44	4.0	15.0	19
SJG		male – female								
SGJ	3B	female – male	25	27.1	M20x1.00	30	53	4.0	18.5	24
SJG		male – female								
SAK		female – male								
SBL		female – male								
SAK	4B	female – male	34	32.0	M25x1.00	50	65	4.0	23.5	30
SBL		female – male								
SGJ		female – male								
SJG		male – female								
SGJ	5B	female – male	45	40.0	M35x1.00	58	80	5.0	33.5	–
SJG		male – female								
SKA		male – female								
SLB		male – female								
SAK		female – male								
SBL		female – male								

Panel cut-out: **P4**

Panel cut-out: **P9** 1B series

Note: for this fixed coupler, the first contact type mentioned is always the one at the flange end.
On request these couplers can be produced in other series, with other keys.
The 5B series is delivered with a round nut.

Threaded-fixing models

The 00 multipole series includes two threaded-fixing plug models. These plugs can be mated with sockets with a threaded front end (XRB or ESG). Plugs include an O-ring guaranteeing an IP64 protection index when mated.

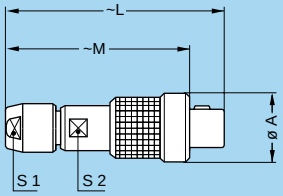

FVG Straight plug, key (G) or keys (A, B), cable collet, threaded-fixing

Reference		Dimensions (mm)				
Model	Series	A	L	M	S1	S2
FVG	00	9	28.5	24	5	5

Note: to be ordered with nut for fitting a bend relief to obtain the rating IP 64.

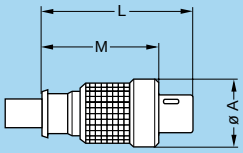

FVB Straight plug, keys (B), threaded-fixing for special cable crimping

Reference		Dimensions (mm)		
Model	Series	A	L	M
FVB	00	9	20	15.4

Note: after assembly the special bend relief GMF.00.018.D● (to be ordered separately) is to be fitted.

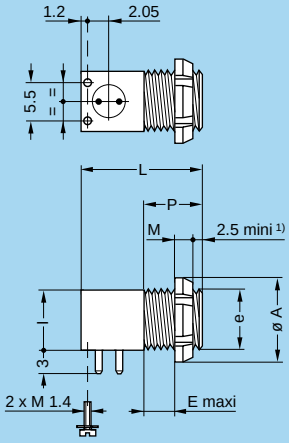

XRB Elbow (90°) socket fixing nut for printed circuit, keys (B), short shell, threaded-fixing
(back panel mounting)

Reference		Dimensions (mm)						
Model	Series	A	e	E	I	L	M	P
XRB	00	10	M7x0.5	1.8	7	14	2.5	7

Panel cut-out: **P2** PCB drilling pattern: **P18** for contact only

Note: 1) minimum length of free thread to ensure mating.

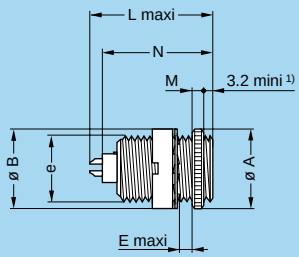

ESG Fixed socket with two round nuts, key (G), or keys (A, B), long threaded shell
(back panel mounting)

Reference		Dimensions (mm)						
Model	Series	A	B	e	E	L	M	N
ESG	00	9.5	9	M7x0.5	4.2	15.5	2	13.7

Panel cut-out: **P2**

Note: 1) minimum length of free thread to ensure mating.

K Series

K series connectors have been specifically designed for outdoor applications.
They include an inner sleeve and two seals to prevent penetration of solids or liquids into the housing formed by the plug, free socket, fixed socket or coupler. All models of this series are watertight when mated to give a protection index of IP68 as per IEC 60529 standard (in mated condition) when correctly assembled to an appropriate cable (IP66 otherwise).
K series connectors have the same insulators as the B series and have the following main features:
– security of the Push-Pull latching system
– watertight connection (IP 68/IP 66)
– multipole types 2 to 64 contacts
– solder, crimp or print (straight or elbow) contacts
– keying system («G» key standard) for connector alignment
– multiple key options to avoid cross mating of similar connectors
– high packing density for space savings
– 360° screening for full EMC shielding
– rugged housing for extreme working conditions.

Interconnections

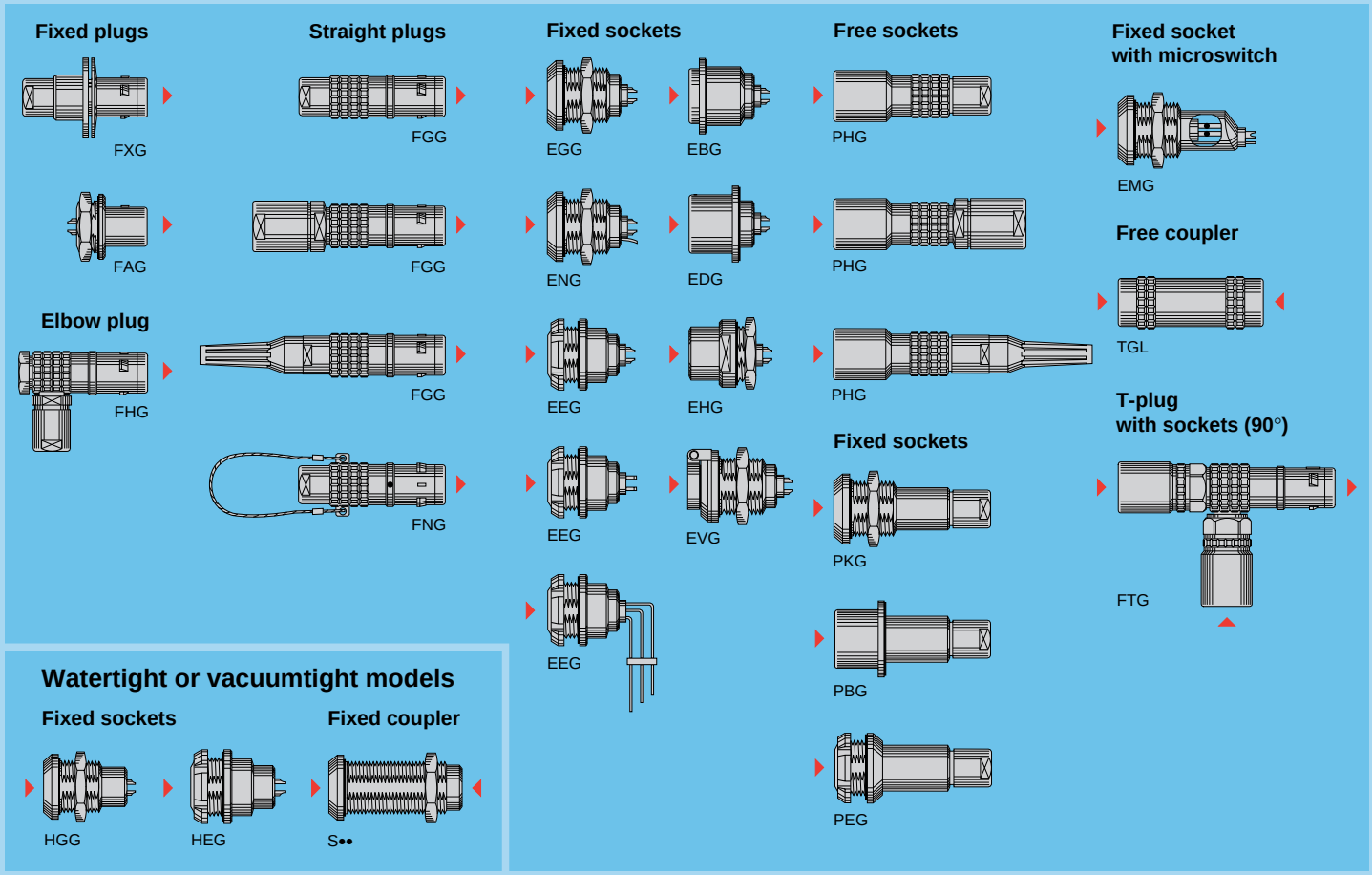

Model Description

EBG Fixed socket with square flange, key (G) or keys (A to F, L and R), screw fixing
EDG Fixed socket with square flange, key (G) or keys (A to F, L and R), protruding shell and earthing tag, screw fixing
EEG Fixed socket, nut fixing, key (G) or keys (A to F, L and R), (back panel mounting)
EEG Fixed socket, nut fixing, key (G) or keys (A to F, L and R) with straight print contacts for printed circuit (back panel mounting)
EEG Fixed socket, nut fixing, key (G) or keys (A to F and R) with elbow (90°) contacts for printed circuit (back panel mounting)
EGG Fixed socket, nut fixing, key (G) or keys (A to F, L and R)
EHG Fixed socket, nut fixing, key (G) or keys (A to F and L), protruding shell
EMG Fixed socket, nut fixing, with microswitch, key (G) or keys (A to F and L)
ENG Fixed socket, nut fixing, key (G) or keys (A to F, L and R) and earthing tag
EVG Fixed socket, nut fixing, key (G) or keys (A to F and L) and dust cap (spring loaded)
FAG Fixed plug, nut fixing, non-latching, key (G) or keys (A to F, L and R)
FGG Straight plug, key (G) or keys (A to F, L and R), cable collet
FGG Straight plug, key (G) or keys (A to F, L and R), cable collet and oversize cable collet
FGG Straight plug, key (G) or keys (A to F, L and R), cable collet and nut for fitting a bend relief
FHG Elbow (90°) plug, key (G) or keys (A to F, L and R), cable collet
FNG Straight plug, key (G) or keys (A to F and L), cable collet and lanyard release
FTG T-plug, key (G) with sockets (90°), key (G)
FXG Fixed plug with round flange, key (G) or keys (A to F, L and R), screw fixing
HEG Fixed socket, nut fixing, key (G) or keys (A to F and L), watertight or vacuumtight (back panel mounting)
HGG Fixed socket, nut fixing, key (G) or keys (A to F and L), watertight or vacuumtight
PBG Fixed socket, key (G) with square flange, cable collet, screw fixing
PEG Fixed socket, nut fixing, key (G) or keys (A to F, L and R), cable collet (back panel mounting)
PHG Free socket, key (G) or keys (A to F, L and R), cable collet
PHG Free socket, key (G) or keys (A to F, L and R), cable collet and oversize cable collet
PHG Free socket, key (G) or keys (A to F, L and R), cable collet and nut for fitting a bend relief
PKG Fixed socket, nut fixing, key (G) or keys (A to F, L and R), cable collet
S●● Fixed coupler, nut fixing, key (G) or keys (L) at the flange end, and key (G) or keys (C or L) at the other end, watertight or vacuumtight
TGL Free coupler, key (G) on one side and keys (L) on the other

Part Section Showing Internal Components

Fixed socket

1. outer shell
2. earthing crown
3. retaining ring
4. hexagonal nut
5. insulator
6. female contact
7. O-ring

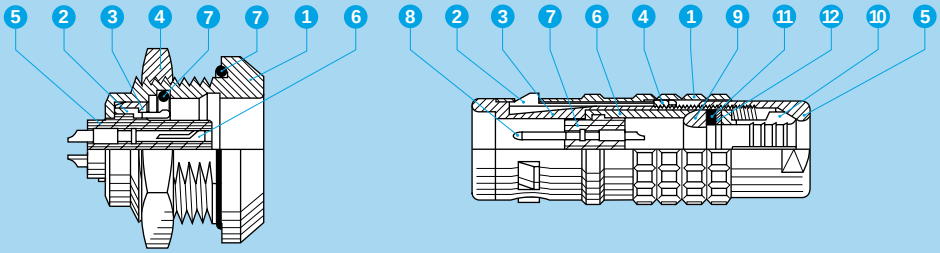

Straight plug

1. outer shell
2. latch sleeve
3. inner shell
4. retaining ring
5. collet nut
6. split insert carrier
7. insulator
8. male contact
9. earthing cone
10. collet
11. gasket
12. washer

Technical Characteristics

Mechanical and Climatical

Characteristics	Value	Standard
Endurance	> 5000 cycles	IEC 60512-5 test 9a
Humidity	up to 95% at 60° C	
Temperature range[1) 2)]	- 50° C, +200° C	
Resistance to vibrations	10-2000 Hz, 15 g	IEC 60512-4 test 6d
Shock resistance	100 g, 6 ms	IEC 60512-4 test 6c
Salt spray corrosion test	> 144h	IEC 60512-6 test 11f
Protection index (mated)	IP 68/IP 66	IEC 60529
Climatical category[1)]	50/175/21	IEC 60068-1

Electrical

Characteristics		Value	Standard
Shielding efficiency	at 10 MHz	> 95 dB	IEC 60169-1-3
	at 1 GHz	> 80 dB	IEC 60169-1-3

Note:
The various tests have been carried out with FGG and EGG connector pairs, with chrome-plated brass shell, PEEK insulator and silicone O-ring. Detailed electrical characteristics, as well as materials and treatment are presented in the chapter Technical Characteristics on page 197.
1) for watertight or vacuumtight models see page 52.
2) minimum operating temperature is -20°C for sockets fitted with an FPM (Viton) O-ring.

Available Models (series and types)

Model	Multipole					
	0K	1K	2K	3K	4K	5K
EBG				●	●	●
EDG				●		
EEG	●	●	●	●	●	
EEG [4]	●	●	●	●		
EGG	●	●	●	●	●	●
EHG		●	●			
EMG			●			
ENG				●		
EVG	●					

Model	Multipole					
	0K	1K	2K	3K	4K	5K
FAG			●	●	●	●
FGG	●	●	●	●	●	●
FGG [1]		●	●	●	●	
FGG [2]	●	●	●	●	●	
FHG	●	●	●	●	●	
FNG			●		●	
FTG			●			
FXG				●	●	●
HEG	●	●	●			

Model	Multipole					
	0K	1K	2K	3K	4K	5K
HGG	●	●	●			●
PBG				●		
PEG	●	●	●	●		
PHG	●	●	●	●	●	●
PHG [1]		●	●	●	●	
PHG [2]	●	●	●	●	●	
PKG	●	●	●	●	●	●
S●●			●		●	●
TGL [3]				●		

Note:
[1] with oversize cable collet
[2] with nut for fitting a bend relief
[3] the TGL model is not available in all types. Please consult the page corresponding to this model
[4] with elbow (90°) print contacts
● = available models by series and types

Alignment Key and Polarized Keying System

Part numbers for the keyed series are composed of three letters. The LAST LETTER indicates the key position and the contact type (male or female).
For example, straight plugs with «G» key or A, B, C, D, E, F, R keys, are fitted with male contacts; whereas with L keys, plugs are fitted with female contacts.
Straight sockets with «G» key or A, B, C, D, E, F, R keys, are fitted with female contacts; whereas with L keys, sockets are fitted with male contacts.

Front view of a socket

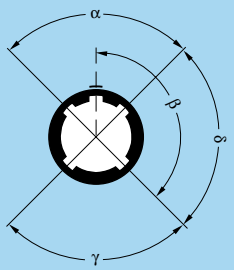

Model	Nb of keys	Angles	Series						Contact type			Note
			0K	1K	2K	3K	4K	5K	Plug	Socket	Coupler [1]	
●●G	1		0°	0°	0°	0°	0°	0°	male	female	female-male	●
●●A	2	α	30°	30°	30°	30°	30°	30°	male	female	female-male	●
●●B	2		45°	45°	45°	45°	45°	45°	male	female	female-male	●
●●C	2		60°	60°	60°	60°	60°	60°	male	female	female-male	●
●●D	2	γ	95°	95°	95°	95°	95°	95°	male	female	female-male	○
●●E	2	β	120°	120°	120°	120°	120°	120°	male	female	female-male	○
●●F	2		145°	145°	145°	145°	145°	145°	male	female	female-male	○
●●L	2	γ	75°	75°	75°	75°	75°	75°	female	male	male-female	○

Front view of a socket

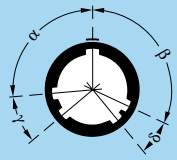

Model	Nb of keys	Angles	Series						Contact type			Note
			0K	1K	2K	3K	4K	5K	Plug	Socket	Coupler [1]	
●●R	5	α	–	–	–	95°	–	–	male	female	female-male	●
		β	–	–	–	115°	–	–				
		γ	–	–	–	35°	–	–				
		δ	–	–	–	25°	–	–				

Note:
S●● and TGL models are not available with all the keys.
For S●● models see explication on page 53.
Please consult the pages corresponding to these models.
[1] the first contact type mentioned is always the one at the flange end.

● First choice alternative ○ Special order alternative

Part Number Example

Straight plug with cable collet

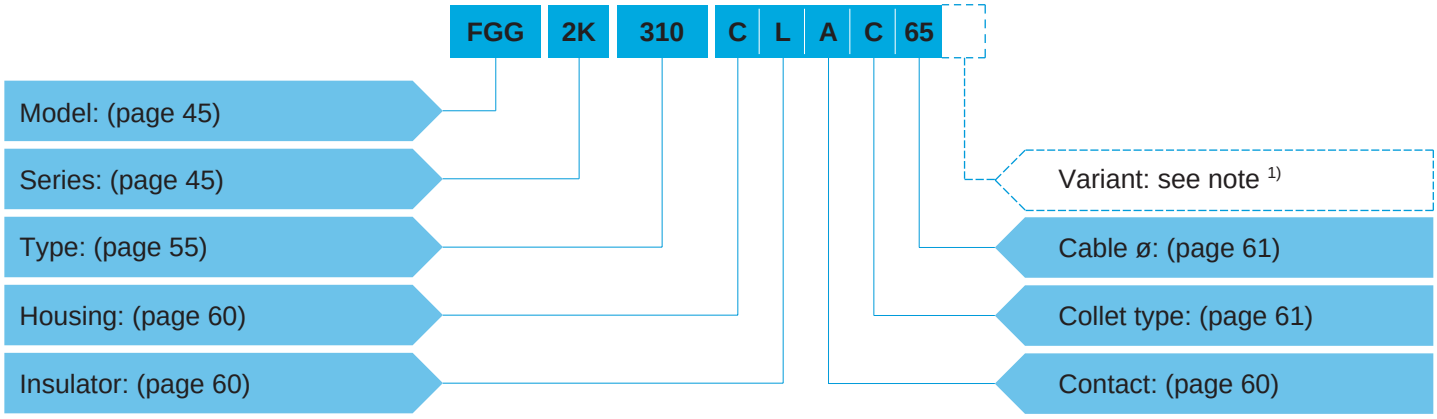

FGG.2K.310.CLAC65 = straight plug with key (G) and cable collet, 2K series, multipole type with 10 contacts, outer shell in chrome-plated brass, PEEK insulator, male solder contacts, C type collet for 6.5 mm diameter cable.

Fixed socket

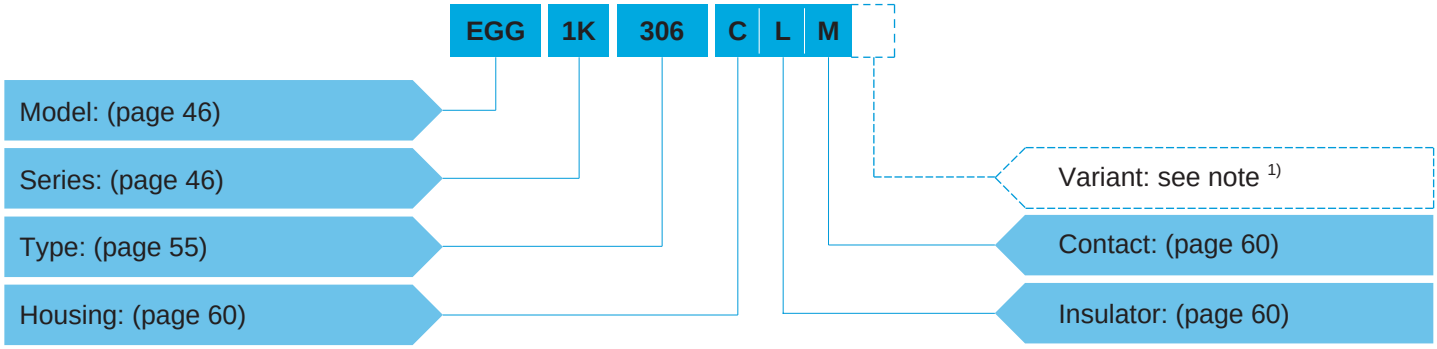

EGG.1K.306.CLM = fixed socket, nut fixing, with key (G), 1K series, multipole type with 6 contacts, outer shell in chrome-plated brass, PEEK insulator, female crimp contacts.

Straight socket

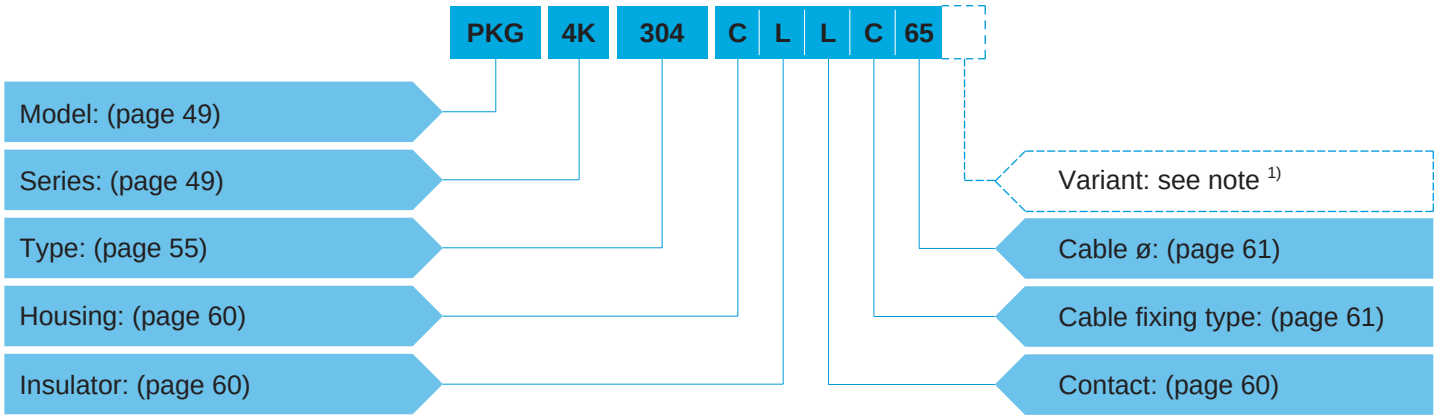

PKG.4K.304.CLLC65 = straight socket, nut fixing, with key (G), 4K series, multipole type with 4 contacts, outer shell in chrome-plated brass, PEEK insulator, female solder contacts, C type collet for 6.5 mm diameter cable.

Note: 1) the «Variant» position in the reference is used to specify either the presence of a collet nut for fitting the bend relief or the anodized colour of the housing in aluminium alloy.
For models with collet nut for fitting the bend relief, a «Z» should be indicated and a bend relief can be ordered separately as indicated in the «Accessories» section. An order for a connector with bend relief should thus include two part numbers.
For the various housings available in colours, the corresponding letter in the part number for the colour is indicated on page 66.
For the watertight models of socket, the letter «P» is used; for the vacuumtight models of socket the letters «PV» shall be indicated.
For the plug and socket that should be fitted with an FPM (Viton) O-ring the letter «H» shall be indicated.

Models - Series

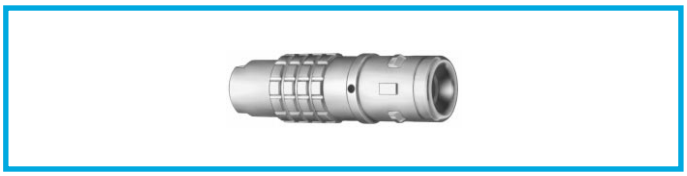

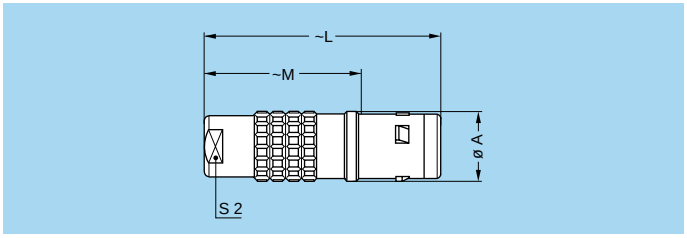

FGG Straight plug, key (G) or keys (A to F, L and R), cable collet

Reference		Dimensions (mm)			
Model	Series	A	L	M	S2
FGG	0K	11	34	23.0	8
FGG	1K	13	42	28.0	9
FGG	2K	16	52	36.0	12
FGG	3K	19	61	41.0	15
FGG	4K	25	71	50.5	19
FGG	5K	38	92	67.0	32

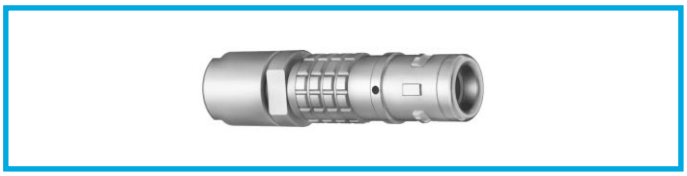

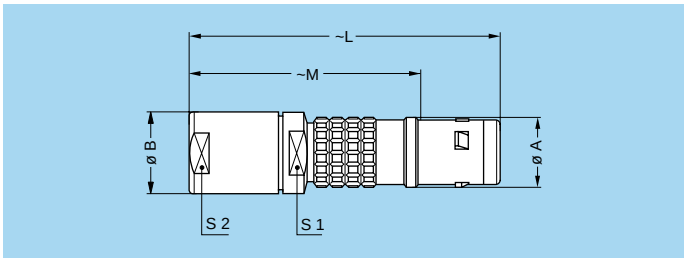

FGG Straight plug, key (G) or keys (A to F, L and R), cable collet and oversize cable collet

Reference		Dimensions (mm)					
Model	Series	A	B	L	M	S1	S2
FGG	1K	13	14.5	55	41.0	12	12
FGG	2K	16	17.0	65	49.0	15	15
FGG	3K	19	22.0	80	60.0	19	19
FGG	4K	25	36.0	105	84.5	30	32

Note: the fitting of oversize collets onto this model allows them to be fitted to the cables that can be accommodated by the next housing size up.

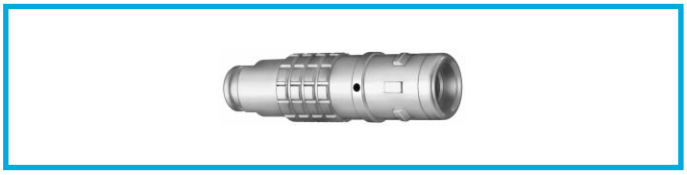

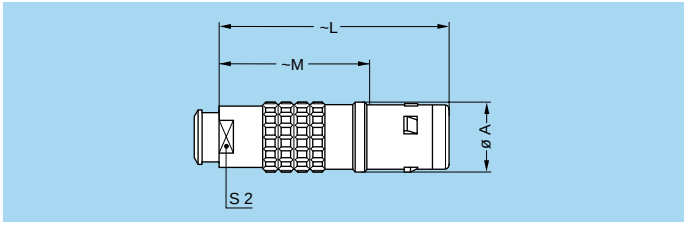

FGG Straight plug, key (G) or keys (A to F, L and R), cable collet and nut for fitting a bend relief

Reference		Dimensions (mm)			
Model	Series	A	L	M	S2
FGG	0K	11	34	23.0	7
FGG	1K	13	42	28.0	9
FGG	2K	16	52	36.0	12
FGG	3K	19	60	40.0	15
FGG	4K	25	71	50.5	19

Note: the bend relief must be ordered separately (see page 175).

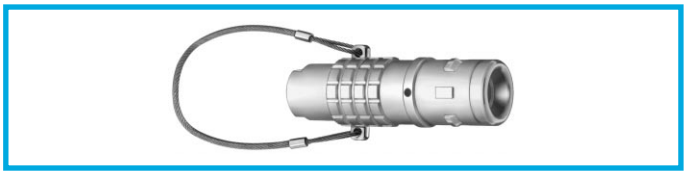

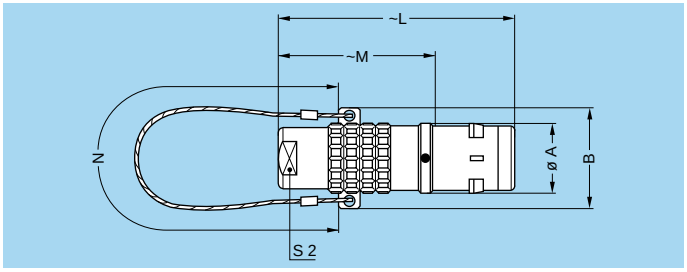

FNG Straight plug, key (G) or keys (A to F and L), cable collet and lanyard release

Reference		Dimensions (mm)					
Model	Series	A	B	L	M	N	S2
FNG	2K	16	23.6	52	36.0	160	12
FNG	4K	25	35.2	71	50.5	230	19

Note: cable material: stainless steel with PVC sheath

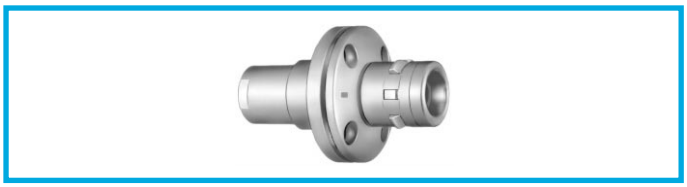

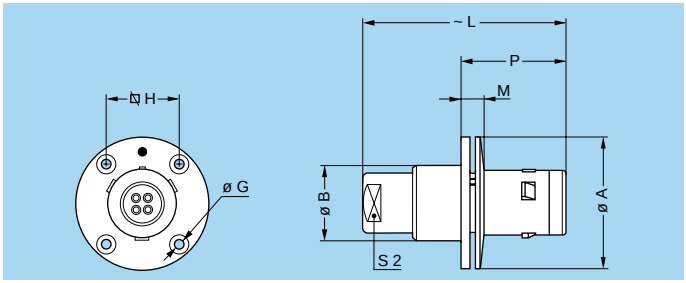

FXG Fixed plug with round flange, key (G) or keys (A to F, L and R) and screw fixing

Reference		Dimensions (mm)							
Model	Series	A	B	G	H	L	M	P	S2
FXG	3K	38	22.5	3.4	20.6	61	10.0	30.0	15
FXG	4K	47	28.5	3.4	27.0	71	11.0	32.0	19
FXG	5K	65	42.5	4.4	38.0	100	12.5	38.5	30

Panel cut-out: **P6**

Note: this model does not include an O-ring behind the flange, it allows the device on which it is fitted to reach only IP50 protection index.
It does not have a cable collet.

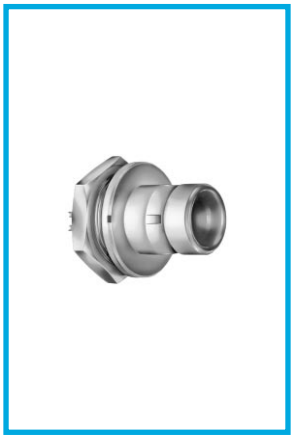

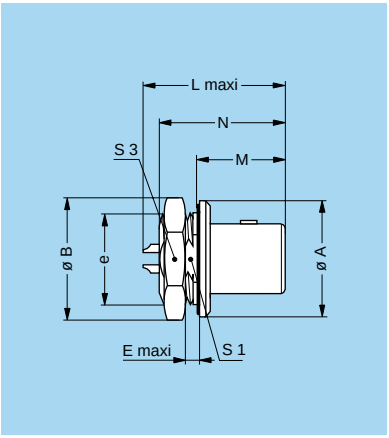

FAG Fixed plug, nut fixing, non-latching, key (G) or keys (A to F, L and R)

Reference		Dimensions (mm)								
Model	Series	A	B	e	E	L	M	N[1)]	S1	S3
FAG	2K	25	27.5	M20x1.0	4.5	28.2	18.0	28.3	18.5	24
FAG	3K	31	34.5	M24x1.0	4.0	34.3	22.5	33.8	22.5	30
FAG	4K	37	41.5	M30x1.0	4.0	35.3	23.0	36.3	28.5	36
FAG	5K	55	54.0	M45x1.5	4.0	43.5	28.5	42.3	42.5	–

Panel cut-out: **P1**

Note: [1)] maximum length with crimp contacts.

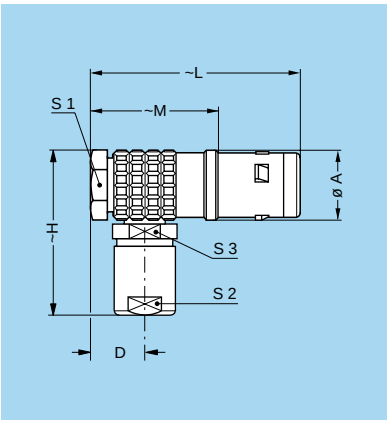

FHG Elbow (90°) plug, key (G) or keys (A to F, L and R), cable collet

Reference		Dimensions (mm)							
Model	Series	A	D	H	L	M	S1	S2	S3
FHG	0K	11.5	7.6	27	36	25.0	10	8	8
FHG	1K	14.0	8.8	33	43	29.0	12	9	10
FHG	2K	17.5	10.5	40	51	35.0	15	12	13
FHG	3K	21.0	11.5	47	60	40.0	18	15	15
FHG	4K	27.5	15.5	57	72	51.5	24	19	20

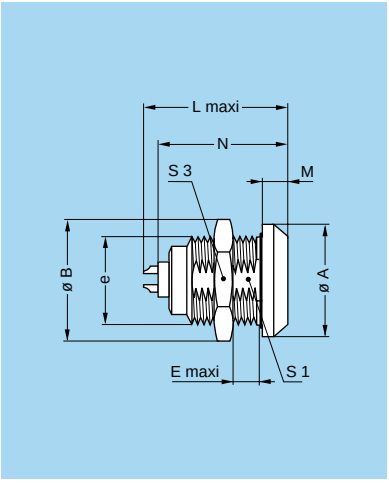

EGG Fixed socket, nut fixing, key (G) or keys (A to F, L and R)

Reference		Dimensions (mm)								
Model	Series	A	B	e	E	L	M	N[1)]	S1	S3
EGG	0K	18	19.5	M14x1.0	6	21.7	4.0	20.1	12.5	17
EGG	1K	20	21.5	M16x1.0	9	27.0	4.5	25.1	14.5	19
EGG	2K	25	27.5	M20x1.0	9	30.7	5.0	28.6	18.5	24
EGG	3K	31	34.5	M24x1.0	11	36.2	6.0	33.6	22.5	30
EGG	4K	37	41.5	M30x1.0	9	40.2	6.5	37.1	28.5	36
EGG	5K	55	54.0	M45x1.5	10	47.5	9.0	43.6	42.5	–

Panel cut-out: **P1**

Note: [1)] maximum length with crimp contacts.
The 5K series is delivered with a round nut.

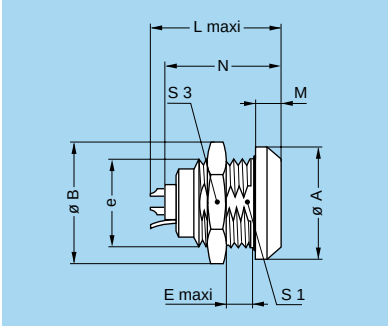

ENG Fixed socket, nut fixing, key (G) or keys (A to F, L and R) and earthing tag

Reference		Dimensions (mm)								
Model	Series	A	B	e	E	L	M	N[1)]	S1	S3
ENG	3K	31	34.7	M24x1.0	11.3	36.2	6	33.6	22.5	30

Panel cut-out: **P1**

Note: [1)] maximum length with crimp contacts.

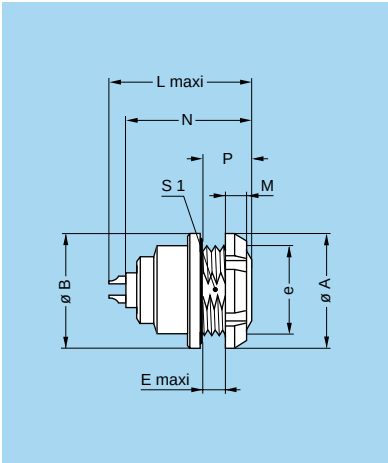

EEG Fixed socket, nut fixing, key (G) or keys (A to F, L and R) (back panel mounting)

Reference		Dimensions (mm)								
Model	Series	A	B	e	E	L	M	N[1)]	P	S1
EEG	0K	18.0	18	M14x1.0	3.4	21.7	3.5	20.1	7.0	12.5
EEG	1K	20.0	20	M16x1.0	6.2	27.0	3.5	25.1	10.0	14.5
EEG	2K	25.0	25	M20x1.0	5.0	30.7	3.5	28.6	10.0	18.5
EEG	3K	30.0	31	M24x1.0	7.5	36.2	4.5	33.6	12.0	22.5
EEG	4K	41.5	37	M30x1.0	6.0	40.2	7.0	37.1	13.5	28.5

Panel cut-out: **P1**

Note: [1)] maximum length with crimp contacts.
The 3K and 4K series are delivered with a conical nut.

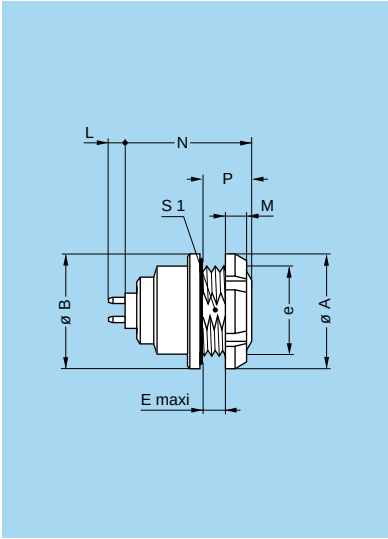

EEG Fixed socket, nut fixing, key (G) or keys (A to F and R) with straight print contacts for printed circuit (back panel mounting)

Reference		Dimensions (mm)							
Model	Series	A	B	e	E	M	N	P	S1
EEG	0K	18.0	18	M14x1.0	3.4	3.5	17.6	7.0	12.5
EEG	1K	20.0	20	M16x1.0	6.2	3.5	23.8	10.0	14.5
EEG	2K	25.0	25	M20x1.0	5.0	3.5	25.8	10.0	18.5
EEG	3K	30.0	31	M24x1.0	7.5	4.5	31.3	12.0	22.5
EEG	4K	41.5	37	M30x1.0	6.0	7.0	34.3	13.5	28.5

Panel cut-out: **P1** PCB drilling pattern: **P15**

Note: this contact type is available for E●● socket models fitted with female contact.
Length «L» depends on the number of contacts, see table page 192.
The 3K and 4K series are delivered with a conical nut.

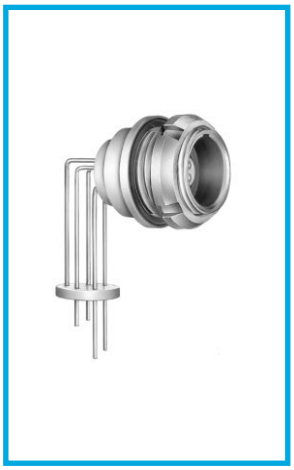

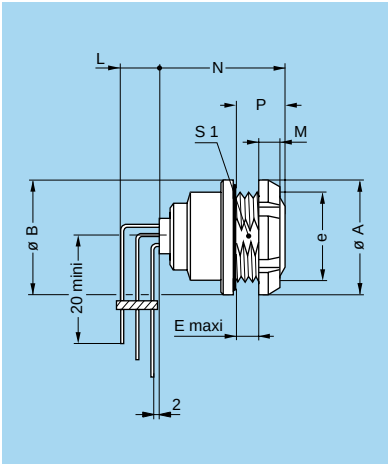

EEG Fixed socket, nut fixing, key (G) or keys (A to F and R) with elbow (90°) contacts for printed circuit (back panel mounting)

Reference		Dimensions (mm)							
Model	Series	A	B	e	E	M	N	P	S1
EEG	0K	18	18	M14x1.0	3.4	3.5	19.3	7	12.5
EEG	1K	20	20	M16x1.0	6.2	3.5	24.3	10	14.5
EEG	2K	25	25	M20x1.0	5.0	3.5	26.6	10	18.5
EEG	3K	30	31	M24x1.0	7.5	4.5	31.3	12	22.5

Panel cut-out: **P1** PCB drilling pattern: **P17**

Note: length «L» depends on the number of contacts, see PCB drilling pattern page 193.
The 3K series is delivered with a conical nut.

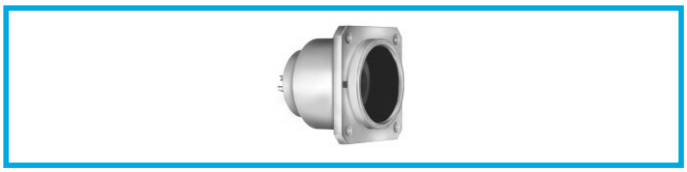

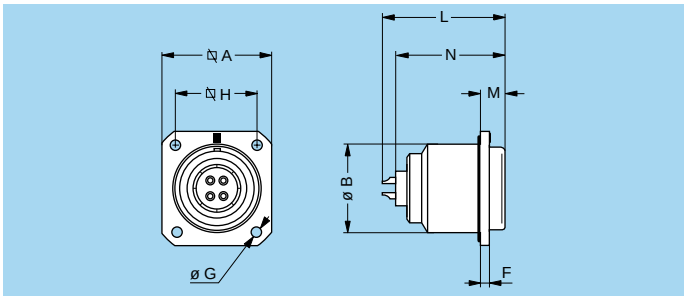

EBG Fixed socket with square flange, key (G) or keys (A to F, L and R) and screw fixing

Reference		Dimensions (mm)							
Model	Series	A	B	F	G	H	L	M	N[1)]
EBG	3K	29	23	3	3.4	23	36.2	6.0	32.6
EBG	4K	37	30	3	3.4	29	40.2	6.5	36.6
EBG	5K	54	45	4	4.4	44	47.5	8.0	42.1

Panel cut-out: **P7**

Note: [1)] maximum length with crimp contacts.

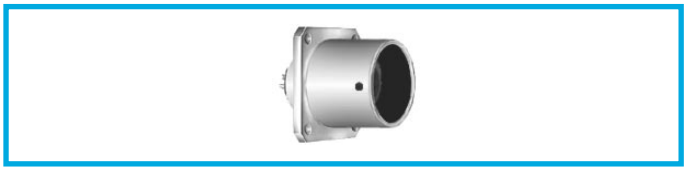

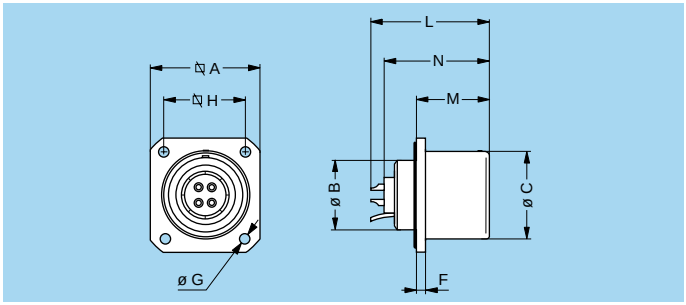

EDG Fixed socket with square flange, key (G) or keys (A to F, L and R), protruding shell and earthing tag, screw fixing

Reference		Dimensions (mm)								
Model	Series	A	B	C	F	G	H	L	M	N[1)]
EDG	3K	29	18	23	3	3.4	23	36.2	22.5	32.6

Panel cut-out: **P7**

Note: [1)] maximum length with crimp contacts.

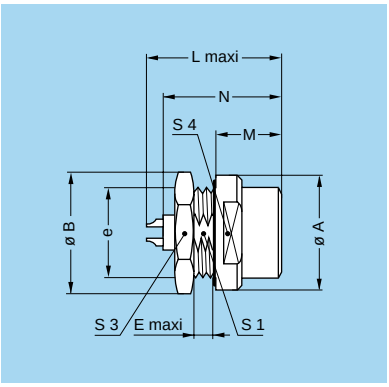

EHG Fixed socket, nut fixing, key (G) or keys (A to F and L), protruding shell

Reference		Dimensions (mm)									
Model	Series	A	B	e	E	L	M	N[1)]	S1	S3	S4
EHG	1K	20	21.5	M16x1.0	1.5	27.0	15.5	25.1	14.5	19	17
EHG	2K	25	27.5	M20x1.0	1.5	30.7	17.0	27.1	18.5	24	20

Panel cut-out: **P1**

Note: [1)] maximum length with crimp contacts.

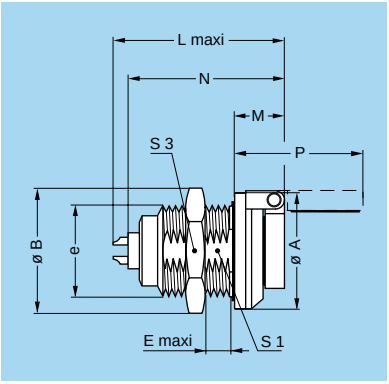

EVG Fixed socket, nut fixing, key (G) or keys (A to F and L) and dust cap (spring loaded)

Reference		Dimensions (mm)									
Model	Series	A	B	e	E	L	M	N[1)]	P	S1	S3
EVG	0K	18	19.5	M14x1.0	6	24.8	7.2	23.3	21.6	12.5	17

Panel cut-out: **P1**

Note: [1)] maximum length with crimp contacts.

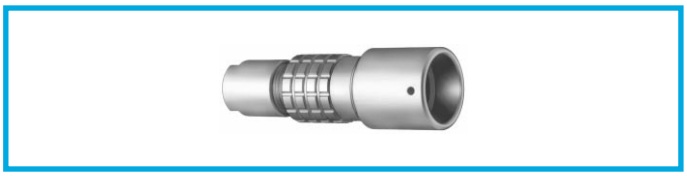

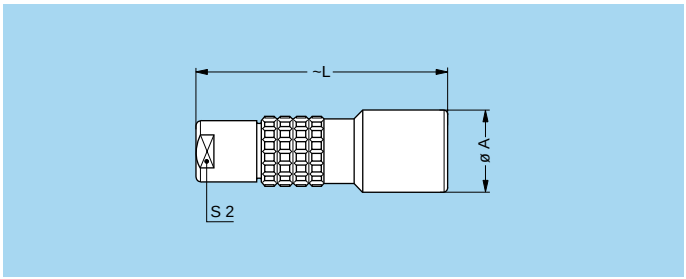

PHG Free socket, key (G) or keys (A to F, L and R), cable collet

Reference		Dimensions (mm)		
Model	Series	A	L	S2
PHG	0K	13	34.0	8
PHG	1K	15	45.0	9
PHG	2K	19	54.0	12
PHG	3K	23	65.0	15
PHG	4K	29	75.5	19
PHG	5K	42	95.0	32

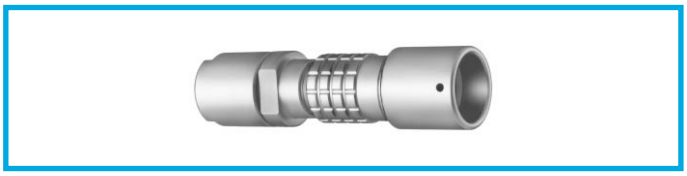

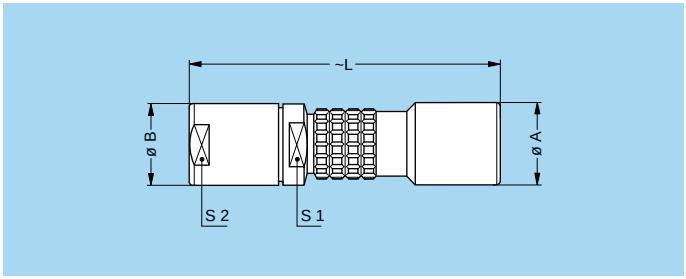

PHG Free socket, key (G) or keys (A to F, L and R), cable collet and oversize cable collet

Reference		Dimensions (mm)				
Model	Series	A	B	L	S1	S2
PHG	1K	15	14.5	58	12	12
PHG	2K	19	17.0	67	15	15
PHG	3K	23	22.0	84	19	19
PHG	4K	29	36.0	109	30	32

Note: the fitting of oversize collets onto this model allows them to be fitted to the cables that can be accommodated by the next housing size up.

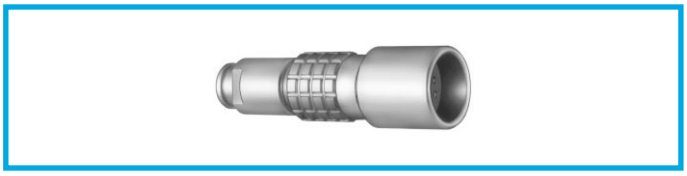

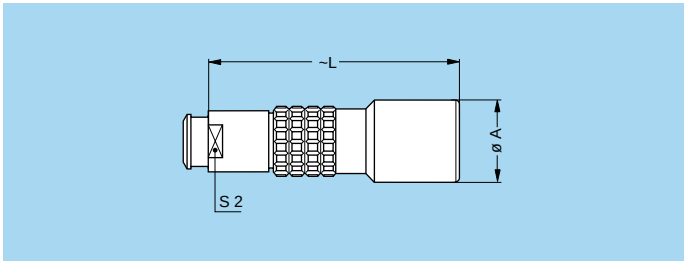

PHG Free socket, key (G) or keys (A to F, L and R), cable collet and nut for fitting a bend relief

Reference		Dimensions (mm)		
Model	Series	A	L	S2
PHG	0K	13	34.0	7
PHG	1K	15	45.0	9
PHG	2K	19	54.0	12
PHG	3K	23	64.0	15
PHG	4K	29	75.5	19

Note: the bend relief must be ordered separately (see page 175).

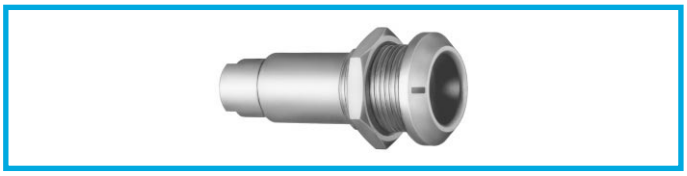

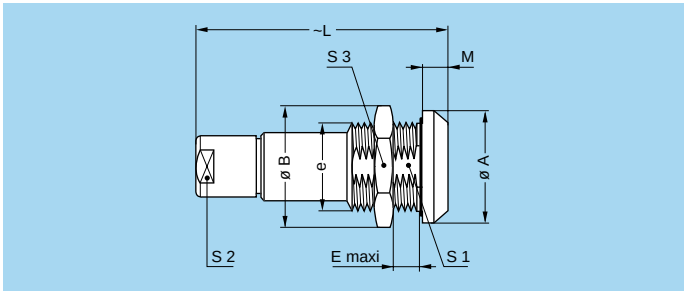

PKG Fixed socket, nut fixing, key (G) or keys (A to F, L and R), cable collet

Reference		Dimensions (mm)								
Model	Series	A	B	e	E	L	M	S1	S2	S3
PKG	0K	18	19.5	M14x1.0	6	34.0	4.0	12.5	8	17
PKG	1K	20	21.5	M16x1.0	9	45.0	4.5	14.5	9	19
PKG	2K	25	27.5	M20x1.0	9	54.0	5.0	18.5	12	24
PKG	3K	31	34.5	M24x1.0	11	65.0	6.0	22.5	15	30
PKG	4K	37	41.5	M30x1.0	9	75.5	6.5	28.5	19	36
PKG	5K	55	54.0	M45x1.0	15	95.0	9.0	42.5	32	–

Panel cut-out: **P1**

Note: the 5K series is delivered with a round nut.

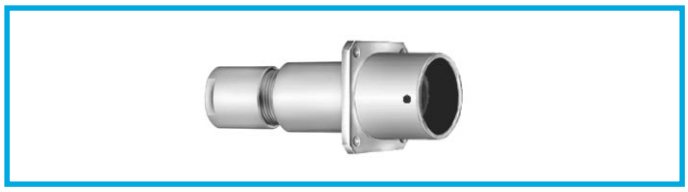

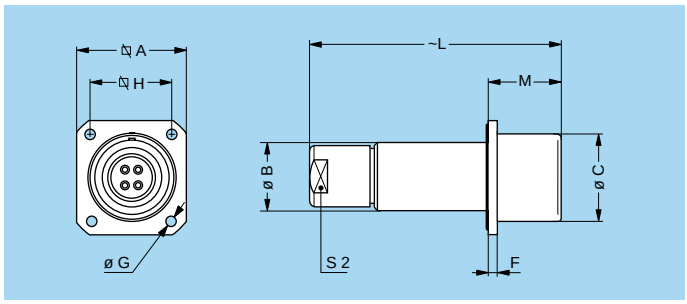

PBG Fixed socket, key (G) with square flange, cable collet and screw fixing

Reference		Dimensions (mm)								
Model	Series	A	B	C	F	G	H	L	M	S2
PBG	3K	29	19	23	3	3.4	23	65	22.5	15

Panel cut-out: **P7**

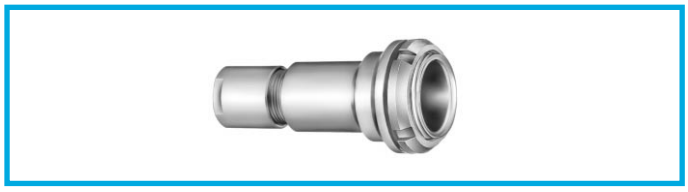

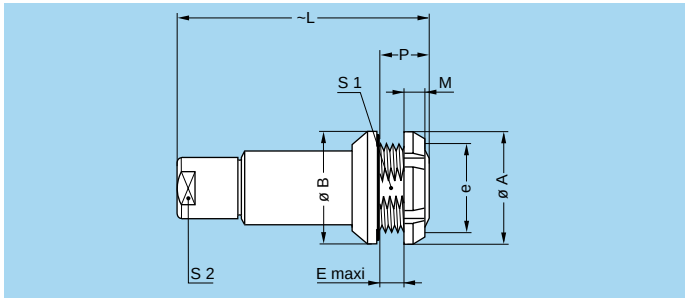

PEG Fixed socket, nut fixing, key (G) or keys (A to F, L and R), cable collet (back panel mounting)

Reference		Dimensions (mm)							
Model	Series	A	B	e	E	L	M	P	S1
PEG	0K	18	18	M14x1.0	3.4	34	3.5	7	12.5
PEG	1K	20	20	M16x1.0	6.2	45	3.5	10	14.5
PEG	2K	25	25	M20x1.0	2.5	54	3.5	10	18.5
PEG	3K	30	31	M24x1.0	7.5	65	4.5	12	22.5

Panel cut-out: **P1**

Note: the 3K series is delivered with a conical nut.

Model with microswitch

Some sockets are available fitted with a microswitch. The microswitch is independent from the electrical contacts of the socket. The introduction of a plug into the socket activates the microswitch.

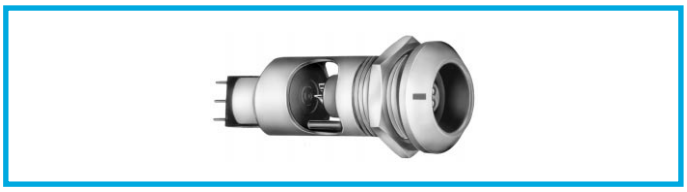

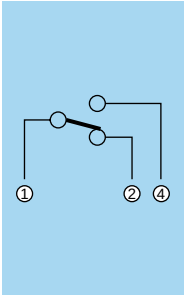

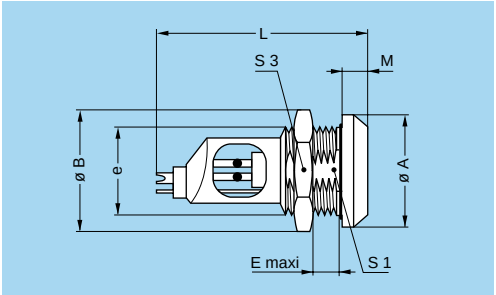

EMG Fixed socket, nut fixing, with microswitch, key (G) or keys (A to F and L)

Reference		Dimensions (mm)							
Model	Series	A	B	e	E	L	M	S1	S3
EMG	2K	25	27.5	M20x1.0	9	49	5	18.5	24

Panel cut-out: **P1**

Note: for the microswitch: maximum operating voltage: 270 Veff/Vdc, rated current: 8.5A/0.5A.

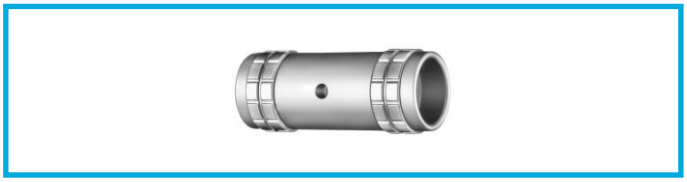

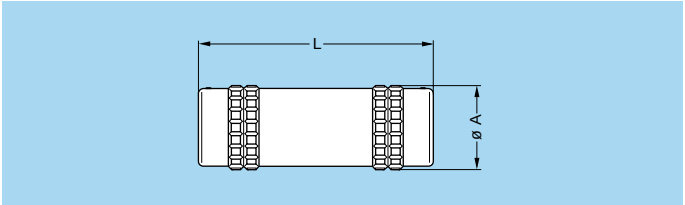

TGL Free coupler, key (G) on one side and keys (L) on the other

Reference		Dim. (mm)	
Model	Series	A	L
TGL	3K	24	64.2

Note: this model is only available in type 308, 310, 316, 318, 320 and 324.

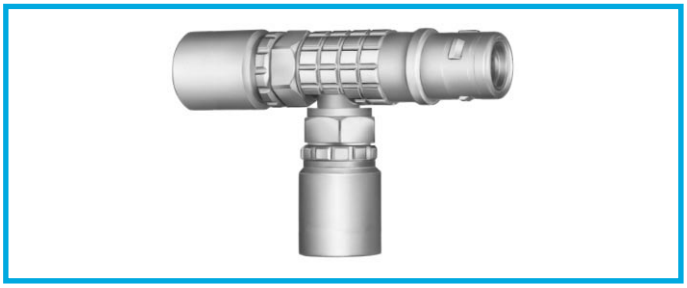

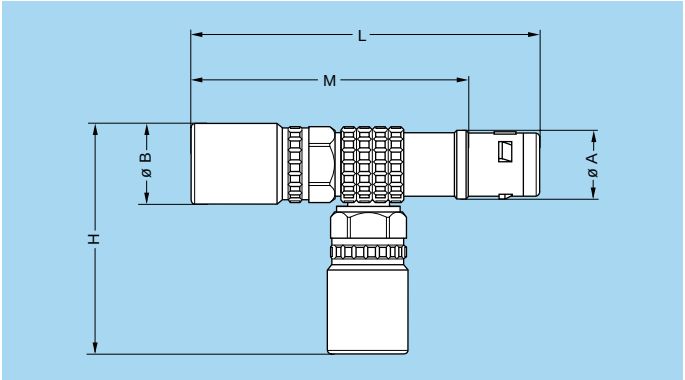

FTG T-plug, key (G) with sockets (90°), key (G)

Reference		Dimensions (mm)				
Model	Series	A	B	H	L	M
FTG	2K	16	19	48	77	60

Note: this model is only available in type 304.

Watertight or vacuumtight models

HEG, HGG and S●● socket or coupler models allow the device on which they are fitted to reach a protection index of IP68 as per IEC 60529. They are fully compatible with plugs of the same series and are widely used for portable radios, military, laboratory equipment, aviation, etc.
These models are identified by a letter «P» at the end of the reference.
Most of these models are also available in a vacuumtight version. Such models are identified by an additional letter «V» at the end of the part number (certificate on request).
Epoxy resin is used to seal these models.
Please refer to page 8 to locate the chapter on selecting watertight connectors.

Part number example:
Watertight socket: HGG.0K.304.CLLP
Vacuumtight socket: HGG.0K.304.CLLPV

Technical Characteristics

Mechanical and Climatical

Characteristics		Value	Standard
Endurance		> 5000 cycles	IEC 60512-5 test 9a
Humidity		up to 95% at 60° C	
Temperature range		- 20° C/+80° C	
Salt spray corrosion test		> 144h	IEC 60512-6 test 11f
Protection index (mated)		IP 68	IEC 60529
Climatical category		20/80/21	IEC 60068-1
Leakage rate (He)[1]		$< 10^{-6}$ mbar.l.s^{-1}	IEC 60512-7 test 14b
Maximum operating pressure[2]	0K	60 bars	IEC 60512-7 test 14d
	1K	60 bars	
	2K	40 bars	
	4K	15 bars	
	5K	5 bars	

Note:
[1] only for vacuumtight models.
[2] this value corresponds to the maximum allowed pressure difference for the assembled socket.

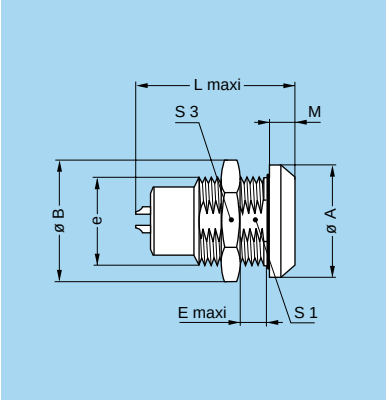

HGG Fixed socket, nut fixing, key (G) or keys (A to F and L), watertight or vacuumtight

Reference		Dimensions (mm)							
Model	Series	A	B	e	E	L	M	S1	S3
HGG	0K	18	19.5	M14x1.0	5.5	21.7	4.0	12.5	17
HGG	1K	20	21.5	M16x1.0	9.0	30.0	4.5	14.5	19
HGG	2K	25	27.5	M20x1.0	13.0	33.7	5.0	18.5	24
HGG	5K	55	54.0	M45x1.5	10.0	55.7	9.0	42.5	–

Panel cut-out: **P1**

Note: the 5K series is delivered with a round nut.

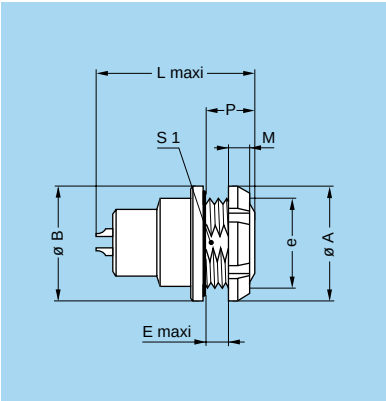

HEG Fixed socket, nut fixing, key (G) or keys (A to F and L), watertight or vacuumtight (back panel mounting)

Reference		Dimensions (mm)							
Model	Series	A	B	e	E	L	M	P	S1
HEG	0K	18	18	M14x1.0	2.4	21.7	3.5	7	12.5
HEG	1K	20	20	M16x1.0	6.2	30.0	3.5	10	14.5
HEG	2K	25	25	M20x1.0	5.0	33.7	3.5	10	18.5

Panel cut-out: **P1**

S●● Fixed coupler, nut fixing, key (G) or keys (L) at the flange end, and key (G) or keys (C or L) at the other end, watertight or vacuumtight

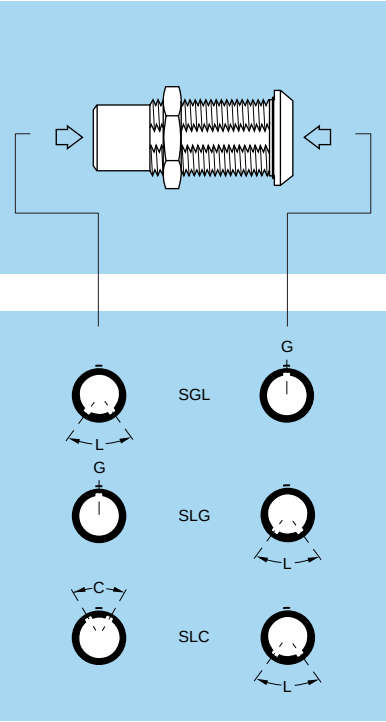

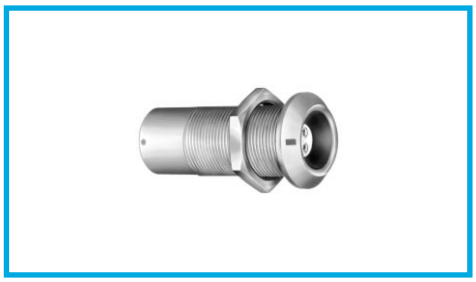

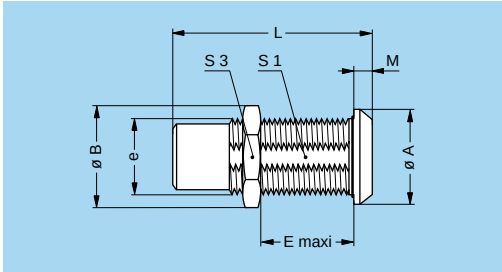

Reference		Contacts	Dimensions (mm)							
Model	Series	Type	A	B	e	E	L	M	S1	S3
SGL	2K	female – male	25	27.5	M20x1.0	25	52.4	5.0	18.5	24
SLG SLC	4K	male – female	37	40.0	M30x1.0	48	74.0	6.5	28.5	36
SLC	5K	male – female	55	54.0	M45x1.5	58	88.0	9.0	42.5	–

Panel cut-out: **P1**

Note: for this fixed coupler, the first contact type mentioned is always the one at the flange end.
On request, these couplers can be produced in other series, with other keys.
The 5K series is delivered with a round nut.

Type (B and K series)

Multipole

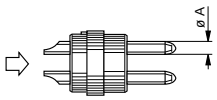

Male solder contacts

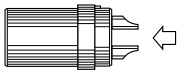

Female solder contacts

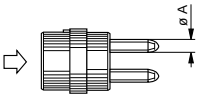

Male crimp contacts

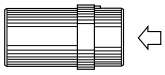

Female crimp contacts

	Reference	Number of contacts	ø A (mm)	Contact type: Solder	Contact type: Crimp	Contact type: Print (straight)	Contact type: Print (elbow)	Solder contact: Test voltage (kV rms)[1] Contact-contact	Solder contact: Test voltage (kV rms)[1] Contact-shell	Crimp contact: Test voltage (kV rms)[1] Contact-contact	Crimp contact: Test voltage (kV rms)[1] Contact-shell	Rated current (A)[1]
00	302	2	0.5	●	●	●	○	1.00	0.95	1.15	1.20	5.0
	303	3	0.5	●	●	●	○	0.80	0.95	1.35	1.10	3.0
	304	4	0.5	●	●	●	○	0.80	0.65	1.05	1.05	2.0
0B 0K	302	2	0.9	●	●	●	●	1.30	1.05	1.45	1.20	10.0[2]
	303	3	0.9	●	●	●	●	1.20	0.90	1.70	1.60	8.0[2]
	304	4	0.7	●	●	●	●	0.85	0.70	1.35	1.10	7.0[2]
	305	5	0.7	●	●	●	●	1.00	0.70	1.25	1.20	6.5[2]
	306	6	0.5	●	●	●	●	0.85	0.65	1.40	1.20	2.5
	307	7	0.5	●	●	●	●	0.80	0.70	1.40	1.20	2.5
	309	9	0.5	●	●	○	○	0.60	0.50	1.00	0.85	2.0
1B 1K	302	2	1.3	●	●	●	●	1.50	1.35	1.70	1.45	15.0[3]
	303	3	1.3	●	●	●	●	1.30	1.55	1.60	1.85	12.0
	304	4	0.9	●	●	●	●	1.35	1.45	1.70	1.80	10.0[2]
	305	5	0.9	●	●	●	●	1.25	1.15	1.30	1.55	9.0[2]
	306	6	0.7	●	●	●	●	1.05	1.20	1.35	1.45	7.0[2]
	307	7	0.7	●	●	●	●	0.95	1.05	1.45	1.45	7.0[2]
	308	8	0.7	●	●	●	●	0.95	1.15	1.30	1.30	5.0
	310	10	0.5	●	●	●	●	0.90	1.50	1.20	1.80	2.5
	314	14	0.5	●	●	●	●	0.80	1.20	0.95	1.60	2.0
	316	16	0.5	●	●	●	○	0.80	1.25	0.95	1.60	1.5

● First choice alternative ○ Special order alternative

Note: [1] **see calculation method, caution and suggested standard on page 204.**
[2] rated current = 6A for socket with elbow (90°) contact for printed circuit.
[3] rated current = 12A for socket with elbow (90°) contact for printed circuit.

Multipole

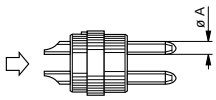

Male solder contacts

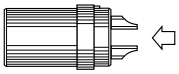

Female solder contacts

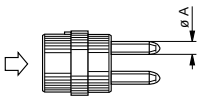

Male crimp contacts

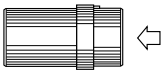

Female crimp contacts

2B
2K

Reference	Number of contacts	ø A (mm)	Contact type: Solder	Contact type: Crimp	Contact type: Print (straight)	Contact type: Print (elbow)	Solder contact: Test voltage (kV rms)[1] Contact-contact	Solder contact: Test voltage (kV rms)[1] Contact-shell	Crimp contact: Test voltage (kV rms)[1] Contact-contact	Crimp contact: Test voltage (kV rms)[1] Contact-shell	Rated current (A)[1]
302	2	2.0	●	●	●	○	2.10	1.75	2.85	2.70	30.0[3]
303	3	1.6	●	●	●	●	2.40	1.85	1.90	1.90	17.0[3]
304	4	1.3	●	●	●	●	1.85	1.85	2.20	2.20	15.0[3]
305	5	1.3	●	●	●	●	1.75	1.60	2.15	2.15	14.0[3]
306	6	1.3	●	●	●	●	1.35	1.45	2.00	2.35	12.0
307	7	1.3	●	●	●	●	1.75	1.60	1.95	2.15	11.0
308	8	0.9	●	●	●	●	1.50	1.25	1.95	1.95	10.0[2]
310	10	0.9	●	●	●	●	1.45	1.30	1.80	2.10	8.0[2]
312	12	0.7	●	●	●	●	1.25	1.35	1.65	2.00	7.0[2]
314	14	0.7	●	●	●	●	1.15	1.35	1.55	1.95	6.5[2]
316	16	0.7	●	●	●	●	0.95	1.25	1.55	1.75	6.0
318	18	0.7	●	●	●	●	0.85	1.20	1.45	2.10	5.5
319	19	0.7	●	●	●	●	0.95	1.25	1.55	1.65	5.0
326	26	0.5	●	●	○	–	0.95	1.30	1.20	1.80	2.0
332	32	0.5	●	●	○	–	0.80	1.2	0.95	1.60	1.5

● First choice alternative ○ Special order alternative

Note: [1] **see calculation method, caution and suggested standard on page 204.**
[2] rated current = 6A for socket with elbow (90°) contact for printed circuit.
[3] rated current = 12A for socket with elbow (90°) contact for printed circuit.

Multipole

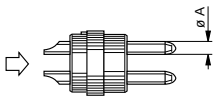

Male solder contacts

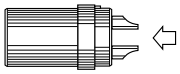

Female solder contacts

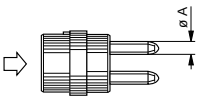

Male crimp contacts

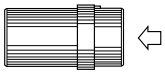

Female crimp contacts

3B
3K

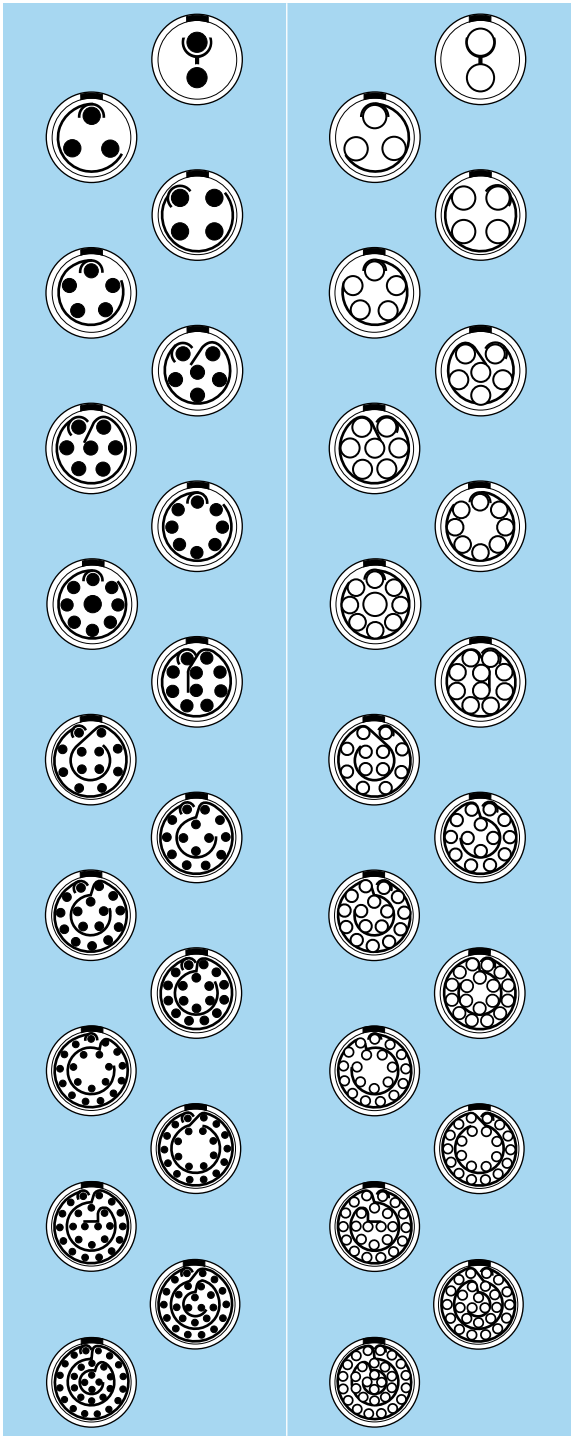

Reference	Number of contacts	ø A (mm)	Contact type: Solder	Contact type: Crimp	Contact type: Print (straight)	Contact type: Print (elbow)	Solder contact: Test voltage (kV rms)[1] Contact-contact	Solder contact: Test voltage (kV rms)[1] Contact-shell	Crimp contact: Test voltage (kV rms)[1] Contact-contact	Crimp contact: Test voltage (kV rms)[1] Contact-shell	Rated current (A)[1]
302	2	3.0	●	●	○	–	2.10	1.55	2.30	1.80	50.0
303	3	2.0	●	●	●	–	1.90	1.50	3.20	2.65	25.0
304	4	2.0	●	●	●	–	1.45	1.25	2.50	2.20	19.0
305	5	1.6	●	●	○	–	1.90	1.25	2.40	1.75	19.0
306	6	1.6	●	●	○	–	1.60	1.15	1.90	1.80	17.0
307	7	1.6	●	●	○	–	1.70	1.25	2.00	2.05	15.0
308	8	1.3	●	●	●	○	1.65	1.15	1.85	1.75	13.0
309	8 1	1.3 2.0	●	●	●	–	1.35 1.35	1.05 1.05	1.10 1.10	1.05 1.05	6.0 15.0
310	10	1.3	●	●	●	○	1.25	0.90	1.50	1.80	12.0
312	12	0.9	●	●	●	○	1.45	1.00	1.65	1.85	9.0
314	14	0.9	●	●	●	●	1.20	1.20	1.80	1.65	9.0[2]
316	16	0.9	●	●	●	●	1.20	0.85	1.80	1.50	8.0
318	18	0.9	●	●	●	●	1.20	1.05	1.85	1.60	7.0
320	20	0.7	●	●	●	●	1.00	0.90	1.35	1.55	6.0
322	22	0.7	●	●	●	○	1.00	0.90	1.70	1.45	5.5
324	24	0.7	●	●	●	●	0.95	0.80	1.35	1.35	4.0
326	26	0.7	●	●	●	○	0.95	0.70	1.50	1.30	4.0
330	30	0.7	●	●	●	●	0.80	0.70	1.35	1.20	3.5

● First choice alternative ○ Special order alternative

Note: [1] **see calculation method, caution and suggested standard on page 204.**
[2] rated current = 6A for socket with elbow (90°) contact for printed circuit.

Multipole

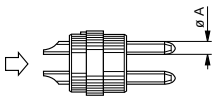

Male solder contacts

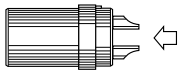

Female solder contacts

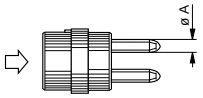

Male crimp contacts

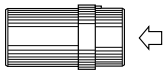

Female crimp contacts

4B
4K

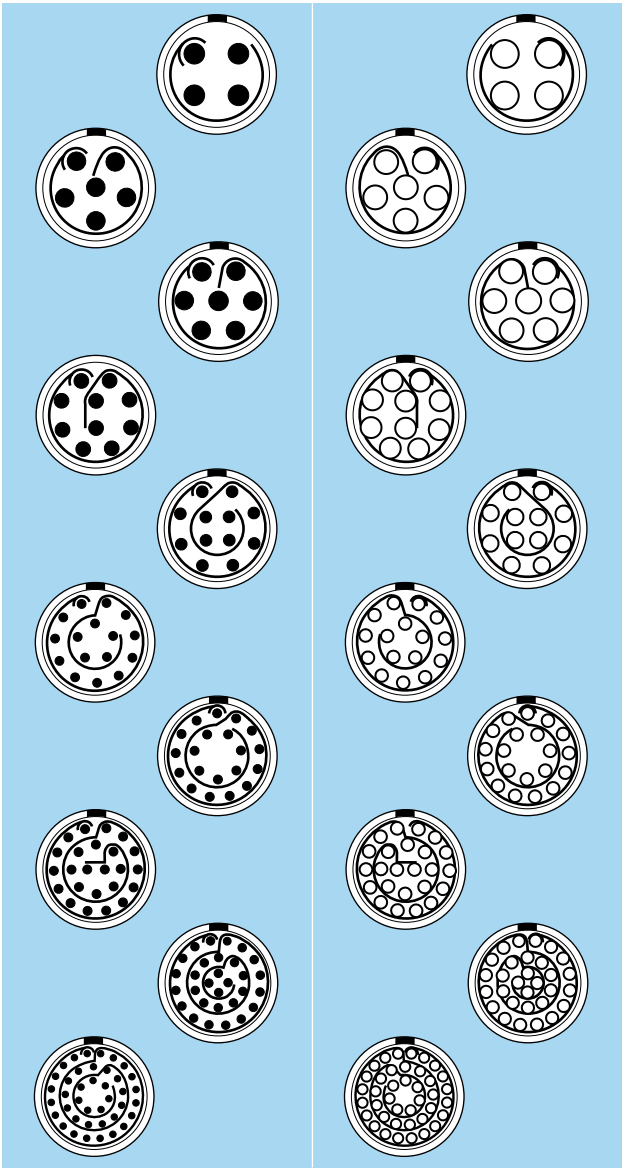

Reference	Number of contacts	ø A (mm)	Contact type			Solder contact		Crimp contact		Rated current (A)[1]
			Solder	Crimp	Print (straight)	Test voltage (kV rms)[1] Contact-contact	Test voltage (kV rms)[1] Contact-shell	Test voltage (kV rms)[1] Contact-contact	Test voltage (kV rms)[1] Contact-shell	
304	4	3.0	●	●	○	2.10	1.50	1.80	1.20	30.0
306	6	2.0	●	●	○	2.00	1.75	2.75	2.40	24.0
307	7	2.0	●	●	○	2.00	1.80	1.50	1.35	20.0
310	10	1.6	●	●	○	1.85	1.30	1.90	1.95	17.0
312	12	1.3	●	●	○	1.45	1.60	1.90	1.85	12.0
316	16	0.9	●	●	●	1.35	1.50	2.30	2.10	10.0
320	20	0.9	●	●	●	1.35	1.00	1.05	0.95	8.0
324	24	0.9	●	●	●	1.20	1.45	1.80	2.05	7.0
330	30	0.9	●	●	●	0.95	0.85	1.75	1.45	5.0
340	40	0.7	●	●	●	0.95	1.00	1.35	1.30	2.0

● First choice alternative ○ Special order alternative **Note: [1] see calculation method, caution and suggested standard on page 204.**

Multipole

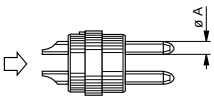

Male solder contacts

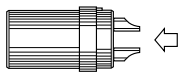

Female solder contacts

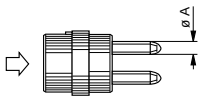

Male crimp contacts

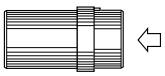

Female crimp contacts

5B
5K

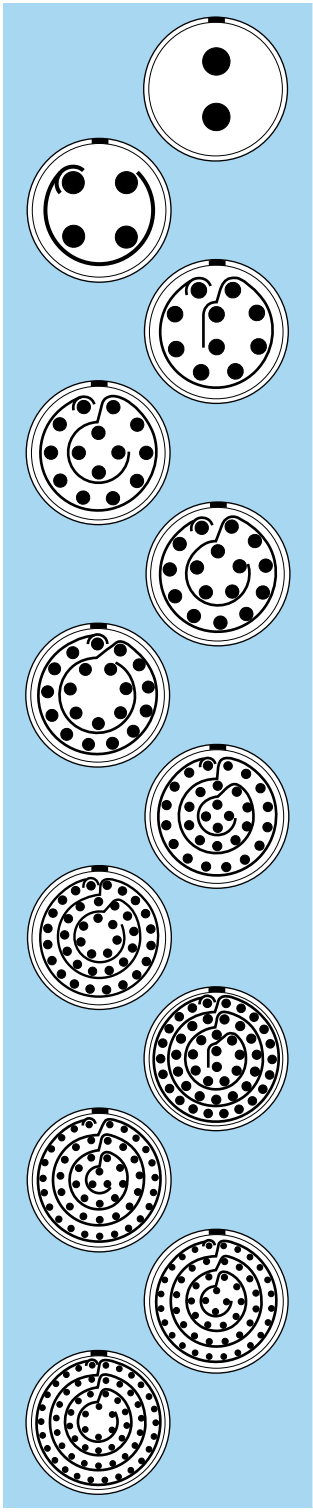

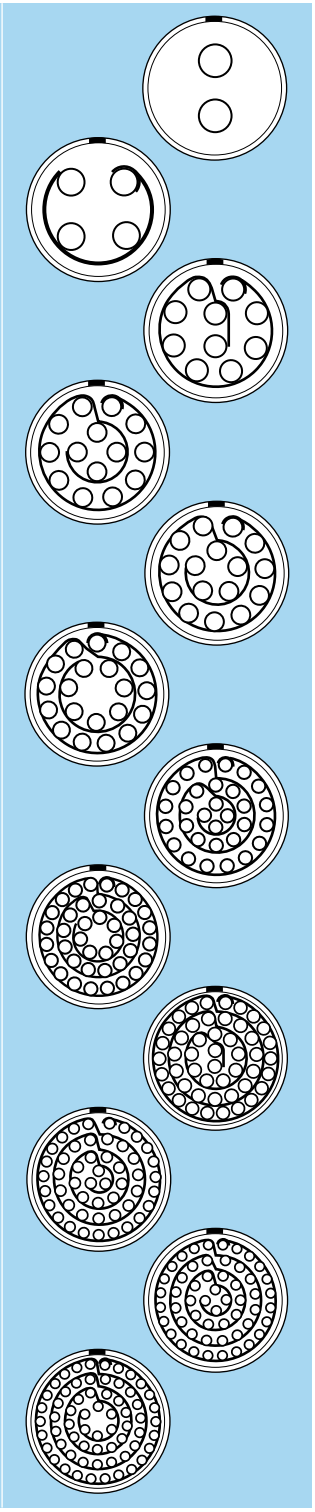

Reference	Number of contacts	ø A (mm)	Contact type: Solder	Contact type: Crimp	Contact type: Print (straight)	Solder contact: Test voltage (kV rms)[1] Contact-contact	Solder contact: Test voltage (kV rms)[1] Contact-shell	Crimp contact: Test voltage (kV rms)[1] Contact-contact	Crimp contact: Test voltage (kV rms)[1] Contact-shell	Rated current (A)[1]
302	2	6.0	●	–	–	3.60	2.95	–	–	50.0
304	4	4.0	●	●	○	2.95	2.65	3.20	2.40	35.0
310	10	3.0	●	●	○	2.35	2.30	2.65	3.20	20.0
314	14	2.0	●	●	○	2.35	2.00	2.85	2.95	18.0
316	16	2.0	●	●	○	1.85	1.95	2.45	3.05	12.0
320	20	1.6	●	●	○	1.90	1.70	2.20	2.40	10.0
330	30	1.3	●	●	○	1.45	1.60	2.05	2.45	8.0
340	40	1.3	●	●	○	1.30	1.45	2.00	1.95	7.0
348	48	1.3	●	●	○	1.20	1.10	2.00	1.55	6.0
350	50	0.9	●	●	●	1.30	1.60	1.20	1.45	6.0
354	54	0.9	●	●	●	1.15	1.55	2.00	2.10	5.0
364	64	0.9	●	●	●	1.30	1.55	1.35	1.85	3.0

● First choice alternative ○ Special order alternative **Note: [1] see calculation method, caution and suggested standard on page 204.**

Housings (B and K series)

Ref.	Material	Surface treatment		Note
		Outer shell and collet nut	Latch sleeve and earthing crown	
C	Brass	chrome	nickel	●
N	Brass	nickel	nickel	○
K	Brass	black chrome	nickel	●
S	Stainless steel	without treatment	nickel-plated brass	●
T	Stainless steel	without treatment	stainless steel	○
U	Stainless steel[1]	without treatment	stainless steel	○
L	Aluminium alloy[2]	anodized	nickel-plated brass	○
H	PPS[3]/brass	without treat./Ni	nickel-plated brass	●
G	PEEK[4]	without treatment	nickel-plated brass	●
P	PA.6[5]	without treatment	nickel-plated brass	●
P	PSU[6]	without treatment	nickel-plated brass	●
R	PPSU[7]	without treatment	nickel-plated brass	●
X	Avional[8]	nickel	nickel-plated brass	●

Note: detailed characteristics of these materials and treatments are presented on page 198.
1) the other metallic parts are in stainless steel.
2) the «variant» position of the reference is used to specify the anodized colour.
3) only available for elbow (90°) sockets for printed circuit of the B and S series.
4) only available for FGG and ENG models of the B series.
5) only for CFF and CRG bridge plugs.
6) only available for ENY and FGY models of the B series. For the colour, see the «variant» position.
7) only available for ENY and FGY models of the B series.
8) anthracite colour.

● First choice alternative ○ Special order alternative

Insulators (B and K series)

Ref.	Material	Note
L	PEEK	1)
Y	PEEK	2)

Note: detailed characteristics of these materials are presented on page 201.
1) for solder or print contacts.
2) only for crimp contacts. For the type 3B.309; 4B.304; 4B.307; 4B.320; 5B.304 and 5B.350 the reference shall be «L» instead of «Y».

Contacts (B and K series)

Contacts for plugs, free or fixed sockets

Ref.	Contact type
A	Male solder
C	Male crimp (fig. 1)[1]
B	Male crimp (fig. 2)[1]
G	Male crimp (fig. 2)[1]
L	Female solder

Ref.	Contact type
M	Female crimp (fig. 1)[1]
P	Female crimp (fig. 2)[1]
U	Female crimp (fig. 2)[1]
N	Female straight print
V	Female elbow print

Note: [1] there are two forms of crimp barrels. Please consult adjacent table for contact selection and the page 9.

Contacts for couplers, plug with socket and bridge plug

Ref.	Contact type
A	Male - Female
C	Male - Male
E	Male - Male - Female

Ref.	Contact type
F	Female - Female - Male
L	Female - Male

Note: the first contact type mentioned is always the one at the flange end.

Dimension of crimp barrels

Contact			Ref. contact type		Conductor			
ø A (mm)	ø C (mm)	Form per fig.	Male	Female	AWG min.	AWG max.	Section (mm²) min.	Section (mm²) max.
0.5	0.45	1	C	M	32	28	0.035	0.09
0.7	0.80	1	C	M	26	22	0.140	0.34
	0.45	2	B	P	32	28	0.035	0.09
0.9	1.10	1	C	M	24	20	0.250	0.50
	0.80	2	B	P	26	22	0.140	0.34
	0.45	2	G	U	32	28	0.035	0.09
1.3	1.40	1	C	M	20	18	0.500	1.00
	1.10	2	B	P	24	20	0.250	0.50
	0.80	2	G	U	26	22	0.140	0.34
1.6	1.90	1	C	M	18	14	1.000	1.50
	1.40	2	B	P	22	18	0.340	1.00
2.0	2.40	1	C	M	16	12	1.500	2.50
	1.90	2	B	P	18	14	1.000	1.50
3.0	2.90	1	C	M	14	10	2.500	4.00
4.0	4.00	1	C	M	12	10	4.000	6.00

Collets (B and K series)

D and M type collets

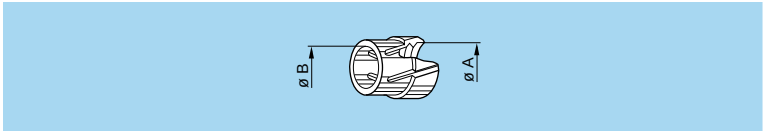

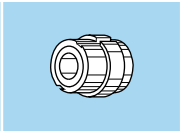
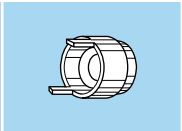
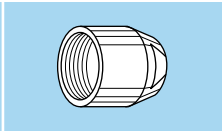

	Reference		Collet ø		Cable ø		Part number of the collet 1)	Part number of the reducer 2)	Part number of the reducing cone 2)	Part number of the collet nut
	Type	ø	ø A	ø B	max.	min.				
00	D	17	1.7	–	1.6	1.1	FGG.00.717.DN	–	–	FGG.00.130.LC
	D	22	2.2	–	2.1	1.6	FGG.00.722.DN	–	–	FGG.00.130.LC
	D	27	2.7	–	2.6	2.1	FGG.00.727.DN	–	–	FGG.00.130.LC
	D	30	3.1	2.8	3.0	2.5	FGG.00.730.DN	–	–	FGG.00.130.LC
	D	35	3.5	2.8	3.4	2.9	FGG.00.735.DN	–	–	FGG.00.130.LC
0B	D	21	2.1	–	2.0	1.5	FGG.0B.721.DN	–	–	FGG.0B.130.LC
	D	31	3.1	–	3.0	2.1	FGG.0B.731.DN	–	–	FGG.0B.130.LC
	D	42	4.2	–	4.0	3.1	FGG.0B.742.DN	–	–	FGG.0B.130.LC
	D	52	5.2	4.7	5.0	4.1	FGG.0B.752.DN	–	–	FGG.0B.130.LC
	D	56	5.6	4.7	5.5	5.1	FGG.0B.756.DN 3)	–	–	FGG.0B.132.LC
1B	M	27	2.7	–	2.6	2.2	FFC.00.727.CN	FGG.1B.138.LN	FGG.1B.158.LN	FGG.1B.130.LC
	M	31	3.1	–	3.0	2.6	FFC.00.731.CN	FGG.1B.138.LN	FGG.1B.158.LN	FGG.1B.130.LC
	D	42	4.2	–	4.0	3.1	FGG.1B.742.DN	–	–	FGG.1B.130.LC
	D	52	5.2	–	5.0	4.1	FGG.1B.752.DN	–	–	FGG.1B.130.LC
	D	62	6.2	–	6.0	5.1	FGG.1B.762.DN	–	–	FGG.1B.130.LC
	D	72	7.2	6.7	7.0	6.1	FGG.1B.772.DN	–	–	FGG.1B.130.LC
	D	76	7.6	6.7	7.5	7.1	FGG.1B.776.DN 3)	–	–	FGG.1B.132.LC
2B	M	21	2.1	–	2.0	1.5	FGG.0B.721.DN	FGG.2B.138.LN	FGG.2B.158.LN	FGG.2B.130.LC
	M	31	3.1	–	3.0	2.1	FGG.0B.731.DN	FGG.2B.138.LN	FGG.2B.158.LN	FGG.2B.130.LC
	M	42	4.2	–	4.0	3.1	FGG.0B.742.DN	FGG.2B.138.LN	FGG.2B.158.LN	FGG.2B.130.LC
	D	52	5.2	–	5.0	4.1	FGG.2B.752.DN	–	–	FGG.2B.130.LC
	D	62	6.2	–	6.0	5.1	FGG.2B.762.DN	–	–	FGG.2B.130.LC
	D	72	7.2	–	7.0	6.1	FGG.2B.772.DN	–	–	FGG.2B.130.LC
	D	82	8.2	–	8.0	7.1	FGG.2B.782.DN	–	–	FGG.2B.130.LC
	D	92	9.2	8.6	9.0	8.1	FGG.2B.792.DN	–	–	FGG.2B.130.LC
	D	99	9.9	8.6	9.7	9.1	FGG.2B.799.DN 3)	–	–	FGG.2B.132.LC
3B	M	52	5.2	–	5.0	4.1	FGG.1B.752.DN	FGG.3B.138.LN	FGG.3B.158.LN	FGG.3B.130.LC
	D	62	6.2	–	6.0	5.1	FGG.3B.762.DN	–	–	FGG.3B.130.LC
	D	72	7.2	–	7.0	6.1	FGG.3B.772.DN	–	–	FGG.3B.130.LC
	D	82	8.2	–	8.0	7.1	FGG.3B.782.DN	–	–	FGG.3B.130.LC
	D	92	9.2	–	9.0	8.1	FGG.3B.792.DN	–	–	FGG.3B.130.LC
	D	10	10.2	–	10.0	9.1	FGG.3B.710.DN	–	–	FGG.3B.130.LC
	D	11	11.2	10.2	11.0	10.1	FGG.3B.711.DN	–	–	FGG.3B.130.LC
	D	12	11.9	10.2	11.7	11.1	FGG.3B.712.DN 3)	–	–	FGG.3B.132.LC

Note:
1) for ordering collets separately.
2) for ordering an M type collet, a reducer and its reducing cone should also be ordered.
3) these collets cannot be used for connector models with nut for fitting a bend relief.

All dimensions are in millimetres.

D and M type collets

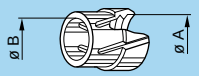

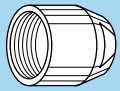

	Reference		Collet ø		Cable ø		Part number of the collet 1)	Part number of the reducer 2)	Part number of the reducing cone 2)	Part number of the collet nut
	Type	ø	ø A	ø B	max.	min.				
4B	M	62	6.2	–	6.0	5.1	FGG.2B.762.DN	FGG.4B.138.LN	FGG.4B.158.LN	FGG.4B.130.LC
	M	72	7.2	–	7.0	6.1	FGG.2B.772.DN	FGG.4B.138.LN	FGG.4B.158.LN	FGG.4B.130.LC
	M	82	8.2	–	8.0	7.1	FGG.2B.782.DN	FGG.4B.138.LN	FGG.4B.158.LN	FGG.4B.130.LC
	M	92	9.2	8.6	9.0	8.1	FGG.2B.792.DN	FGG.4B.138.LN	FGG.4B.158.LN	FGG.4B.130.LC
	D	10	10.8	–	10.5	9.1	FGG.4B.710.DN	–	–	FGG.4B.130.LC
	D	12	12.3	–	12.0	10.6	FGG.4B.712.DN	–	–	FGG.4B.130.LC
	D	13	13.8	12.5	13.5	12.1	FGG.4B.713.DN	–	–	FGG.4B.130.LC
	D	15	15.3	12.5	15.0	13.6	FGG.4B.715.DN	–	–	FGG.4B.130.LC
	D	16	16.3	12.5	16.0	15.1	FGG.4B.716.DN 3)	–	–	FGG.4B.132.LC
5B	D	11	11.8	–	11.5	9.6	FGG.5B.711.DN	–	–	FGG.5B.130.LC
	D	13	13.8	–	13.5	11.6	FGG.5B.713.DN	–	–	FGG.5B.130.LC
	D	15	15.8	–	15.5	13.6	FGG.5B.715.DN	–	–	FGG.5B.130.LC
	D	17	17.8	–	17.5	15.6	FGG.5B.717.DN 3)	–	–	FGG.5B.130.LC
	D	19	19.8	–	19.5	17.6	FGG.5B.719.DN 3)	–	–	FGG.5B.130.LC
	D	21	21.8	–	21.5	19.6	FGG.5B.721.DN 3)	–	–	FGG.5B.130.LC
	D	23	23.8	21.8	23.5	21.6	FGG.5B.723.DN 3)	–	–	FGG.5B.130.LC
	D	25	25.3	21.8	25.0	23.6	FGG.5B.725.DN 3)	–	–	FGG.5B.132.LC

Note:
1) for ordering collet separately.
2) for ordering an M type collet, a reducer and its reducing cone should also be ordered.
3) these collets cannot be used for connector models with collet nut for fitting a bend relief.

Bend relief collet nut and bend relief

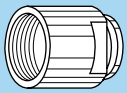
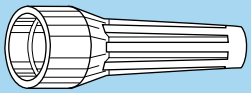

	Reference		Part number of the collet nut	Bend relief to be used 1)
	Type	ø		
00	D	17 to 35	FFM.00.131.LC	GMA.00.●●●.●● GMB.00.●●●.●●
0B	D	21 to 52	FFM.0B.130.LC	GMA.0B.●●●.●●
1B	M	27 and 31	FFM.1B.130.LC	GMA.1B.●●●.●●
	D	42 to 72	FFM.1B.130.LC	GMA.1B.●●●.●●
2B	M	21 and 31	FFM.2B.132.LC	GMA.0B.●●●.●●
	M	42	FFM.2B.130.LC	GMA.2B.●●●.●●
	D	52 to 92	FFM.2B.130.LC	GMA.2B.●●●.●●
3B	M	52	FFM.3B.131.LC	GMA.1B.●●●.●●
	D	62 to 11	FFM.3B.130.LC	GMA.3B.●●●.●●
4B	M	62 and 72	FFM.4B.132.LC	GMA.2B.●●●.●●
	M	82 and 92	FFM.4B.130.LC	GMA.4B.●●●.●●
	D	10 to 15	FFM.4B.130.LC	GMA.4B.●●●.●●
5B	D	11 to 15	FFM.5B.130.LC	GMA.4B.●●●.●●

Note: 1) the bend relief is to be ordered separately (see pages 175 and 176).

All dimensions are in millimetres.

C and K type collets

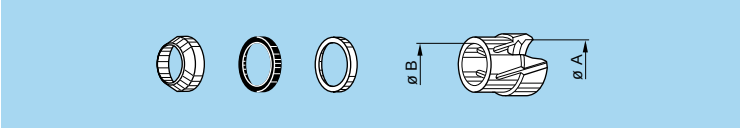

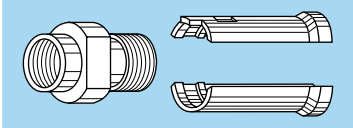

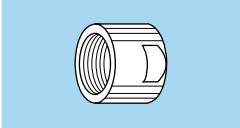

	Reference		Collet ø		Cable ø		Part number of the collet system [1]	Part number of the oversize collet and of the two split centre-pieces [2]	Part number of the collet nut [2]
	Type	ø	ø A	ø B	max.	min.			
0K	C	10	1.6	–	1.2	1.0	FFA.0E.710.CNS	–	FFA.0E.130.LC
	C	15	1.6	–	1.5	1.3	FFA.0E.715.CNS	–	FFA.0E.130.LC
	C	20	2.1	–	2.0	1.6	FFA.0E.720.CNS	–	FFA.0E.130.LC
	C	25	3.1	–	2.5	2.1	FFA.0E.725.CNS	–	FFA.0E.130.LC
	C	30	3.1	–	3.0	2.6	FFA.0E.730.CNS	–	FFA.0E.130.LC
	C	35	4.2	4.2	3.5	3.1	FFA.0E.735.CNS	–	FFA.0E.130.LC
	C	40	4.2	4.2	4.0	3.6	FFA.0E.740.CNS	–	FFA.0E.130.LC
	C	45	5.2	5.2	4.5	4.1	FFA.0E.745.CNS	–	FFA.0E.130.LC
	C	50	5.2	5.2	5.0	4.6	FFA.0E.750.CNS	–	FFA.0E.130.LC
1K	C	15	1.6	–	1.5	1.3	FFA.1E.715.CNS	–	FFA.1E.130.LC
	C	20	2.2	–	2.0	1.6	FFA.1E.720.CNS	–	FFA.1E.130.LC
	C	25	3.2	–	2.5	2.1	FFA.1E.725.CNS	–	FFA.1E.130.LC
	C	30	3.2	–	3.0	2.6	FFA.1E.730.CNS	–	FFA.1E.130.LC
	C	35	4.2	–	3.5	3.1	FFA.1E.735.CNS	–	FFA.1E.130.LC
	C	40	4.2	–	4.0	3.6	FFA.1E.740.CNS	–	FFA.1E.130.LC
	C	45	5.2	–	4.5	4.1	FFA.1E.745.CNS	–	FFA.1E.130.LC
	C	50	5.2	–	5.0	4.6	FFA.1E.750.CNS	–	FFA.1E.130.LC
	C	55	6.2	6.2	5.5	5.1	FFA.1E.755.CNS	–	FFA.1E.130.LC
	C	60	6.2	6.2	6.0	5.6	FFA.1E.760.CNS	–	FFA.1E.130.LC
	C	65	7.2	6.7	6.5	6.1	FFA.1E.765.CNS	–	FFA.1E.130.LC
	K	70	7.2	–	7.0	6.6	FFA.2E.770.CNS	FFA.1K.137.LCN	FFA.2E.130.LC [2]
	K	75	8.2	8.2	7.5	7.1	FFA.2E.775.CNS	FFA.1K.137.LCN	FFA.2E.130.LC [2]
	K	80	8.2	8.2	8.0	7.6	FFA.2E.780.CNS	FFA.1K.137.LCN	FFA.2E.130.LC [2]
	K	85	9.2	8.6	8.5	8.1	FFA.2E.785.CNS	FFA.1K.137.LCN	FFA.2E.130.LC [2]
2K	C	15	2.2	–	1.5	1.3	FFA.2E.715.CNS	–	FFA.2E.130.LC
	C	20	2.2	–	2.0	1.6	FFA.2E.720.CNS	–	FFA.2E.130.LC
	C	25	3.2	–	2.5	2.1	FFA.2E.725.CNS	–	FFA.2E.130.LC
	C	30	3.2	–	3.0	2.6	FFA.2E.730.CNS	–	FFA.2E.130.LC
	C	35	4.2	–	3.5	3.1	FFA.2E.735.CNS	–	FFA.2E.130.LC
	C	40	4.2	–	4.0	3.6	FFA.2E.740.CNS	–	FFA.2E.130.LC
	C	45	5.2	–	4.5	4.1	FFA.2E.745.CNS	–	FFA.2E.130.LC
	C	50	5.2	–	5.0	4.6	FFA.2E.750.CNS	–	FFA.2E.130.LC
	C	55	6.2	–	5.5	5.1	FFA.2E.755.CNS	–	FFA.2E.130.LC
	C	60	6.2	–	6.0	5.6	FFA.2E.760.CNS	–	FFA.2E.130.LC
	C	65	7.2	–	6.5	6.1	FFA.2E.765.CNS	–	FFA.2E.130.LC
	C	70	7.2	–	7.0	6.6	FFA.2E.770.CNS	–	FFA.2E.130.LC
	C	75	8.2	8.2	7.5	7.1	FFA.2E.775.CNS	–	FFA.2E.130.LC
	C	80	8.2	8.2	8.0	7.6	FFA.2E.780.CNS	–	FFA.2E.130.LC
	C	85	9.2	8.6	8.5	8.1	FFA.2E.785.CNS	–	FFA.2E.130.LC
	K	90	9.2	–	9.0	8.6	FFA.3E.790.CNS	FFA.2K.137.LCN	FFA.3E.130.LC [2]
	K	95	10.2	10.2	9.5	9.1	FFA.3E.795.CNS	FFA.2K.137.LCN	FFA.3E.130.LC [2]
	K	10	10.2	10.2	10.0	9.6	FFA.3E.710.CNS	FFA.2K.137.LCN	FFA.3E.130.LC [2]
	K	11	11.2	10.6	11.0	10.1	FFA.3E.711.CNS	FFA.2K.137.LCN	FFA.3E.130.LC [2]

Note:
[1] for ordering the collet system separately.
[2] for ordering the K type collet, the oversize collet and the split centre-pieces, as well as the corresponding collet nut should also be ordered.

All dimensions are in millimetres.

C and K type collets

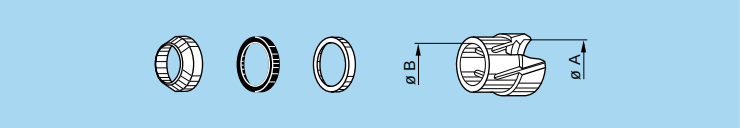

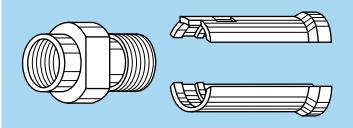

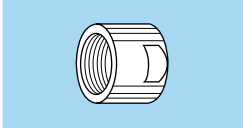

	Reference		Collet ø		Cable ø		Part number of the collet system [1]	Part number of the oversize collet and of the two split centre-pieces [2]	Part number of the collet nut [2]
	Type	ø	ø A	ø B	max.	min.			
3K	C	30	3.2	–	3.0	2.6	FFA.3E.730.CNS	–	FFA.3E.130.LC
	C	35	4.2	–	3.5	3.1	FFA.3E.735.CNS	–	FFA.3E.130.LC
	C	40	4.2	–	4.0	3.6	FFA.3E.740.CNS	–	FFA.3E.130.LC
	C	45	5.2	–	4.5	4.1	FFA.3E.745.CNS	–	FFA.3E.130.LC
	C	50	5.2	–	5.0	4.6	FFA.3E.750.CNS	–	FFA.3E.130.LC
	C	55	6.2	–	5.5	5.1	FFA.3E.755.CNS	–	FFA.3E.130.LC
	C	60	6.2	–	6.0	5.6	FFA.3E.760.CNS	–	FFA.3E.130.LC
	C	65	7.2	–	6.5	6.1	FFA.3E.765.CNS	–	FFA.3E.130.LC
	C	70	7.2	–	7.0	6.6	FFA.3E.770.CNS	–	FFA.3E.130.LC
	C	75	8.2	–	7.5	7.1	FFA.3E.775.CNS	–	FFA.3E.130.LC
	C	80	8.2	–	8.0	7.6	FFA.3E.780.CNS	–	FFA.3E.130.LC
	C	85	9.2	–	8.5	8.1	FFA.3E.785.CNS	–	FFA.3E.130.LC
	C	90	9.2	–	9.0	8.6	FFA.3E.790.CNS	–	FFA.3E.130.LC
	C	95	10.2	10.2	9.5	9.1	FFA.3E.795.CNS	–	FFA.3E.130.LC
	C	10	10.2	10.2	10.0	9.6	FFA.3E.710.CNS	–	FFA.3E.130.LC
	C	11	11.2	11.2	10.5	10.1	FFA.3E.711.CNS	–	FFA.3E.130.LC
	K	11	12.3	–	12.0	10.6	FFA.4E.711.CNS	FFA.3K.137.LCN	FFA.4E.130.LC [2]
	K	12	13.8	13.8	12.8	12.1	FFA.4E.712.CNS	FFA.3K.137.LCN	FFA.4E.130.LC [2]
	K	13	13.8	13.8	13.5	12.9	FFA.4E.713.CNS	FFA.3K.137.LCN	FFA.4E.130.LC [2]
	K	14	15.3	15.3	14.0	13.6	FFA.4E.714.CNS	FFA.3K.137.LCN	FFA.4E.130.LC [2]
	K	15	15.3	15.3	15.0	14.1	FFA.4E.715.CNS	FFA.3K.137.LCN	FFA.4E.130.LC [2]
4K	C	50	6.3	–	5.0	4.8	FFA.4E.750.CNS	–	FFA.4E.130.LC
	C	55	6.3	–	5.5	5.1	FFA.4E.755.CNS	–	FFA.4E.130.LC
	C	60	6.3	–	6.0	5.6	FFA.4E.760.CNS	–	FFA.4E.130.LC
	C	65	7.3	–	6.5	6.1	FFA.4E.765.CNS	–	FFA.4E.130.LC
	C	70	7.3	–	7.0	6.6	FFA.4E.770.CNS	–	FFA.4E.130.LC
	C	75	8.3	–	7.5	7.1	FFA.4E.775.CNS	–	FFA.4E.130.LC
	C	80	8.3	–	8.0	7.6	FFA.4E.780.CNS	–	FFA.4E.130.LC
	C	85	9.3	–	8.5	8.1	FFA.4E.785.CNS	–	FFA.4E.130.LC
	C	90	9.3	–	9.0	8.6	FFA.4E.790.CNS	–	FFA.4E.130.LC
	C	95	10.8	–	9.5	9.1	FFA.4E.795.CNS	–	FFA.4E.130.LC
	C	10	10.8	–	10.5	9.6	FFA.4E.710.CNS	–	FFA.4E.130.LC
	C	11	12.3	–	12.0	10.6	FFA.4E.711.CNS	–	FFA.4E.130.LC
	C	12	13.8	13.8	12.8	12.1	FFA.4E.712.CNS	–	FFA.4E.130.LC
	C	13	13.8	13.8	13.5	12.9	FFA.4E.713.CNS	–	FFA.4E.130.LC
	C	14	15.3	15.3	14.0	13.6	FFA.4E.714.CNS	–	FFA.4E.130.LC
	C	15	15.3	15.3	15.0	14.1	FFA.4E.715.CNS	–	FFA.4E.130.LC
	K	16	17.8	–	16.5	15.6	FFA.4K.716.CNS	FFA.4K.137.LCN [3]	FFA.4K.136.LC [2]
	K	17	17.8	–	17.5	16.6	FFA.4K.717.CNS	FFA.4K.137.LCN	FFA.4K.136.LC [2]
	K	18	19.8	–	18.5	17.6	FFA.4K.718.CNS	FFA.4K.137.LCN	FFA.4K.136.LC [2]
	K	19	19.8	–	19.5	18.6	FFA.4K.719.CNS	FFA.4K.137.LCN	FFA.4K.136.LC [2]
	K	20	21.8	–	20.5	19.6	FFA.4K.720.CNS	FFA.4K.137.LCN	FFA.4K.136.LC [2]
	K	21	21.8	–	21.5	20.6	FFA.4K.721.CNS	FFA.4K.137.LCN	FFA.4K.136.LC [2]
	K	22	23.8	23.8	22.5	21.6	FFA.4K.722.CNS	FFA.4K.137.LCN	FFA.4K.136.LC [2]
	K	23	23.8	23.8	23.5	22.6	FFA.4K.723.CNS	FFA.4K.137.LCN	FFA.4K.136.LC [2]

Note:
[1] for ordering the collet system separately.
[2] for ordering the K type collet, the oversize collet and the split centre-pieces, as well as the corresponding collet nut should also be ordered.
[3] in 4K series, the centre-piece is made of one piece.

All dimensions are in millimetres.

C type collets

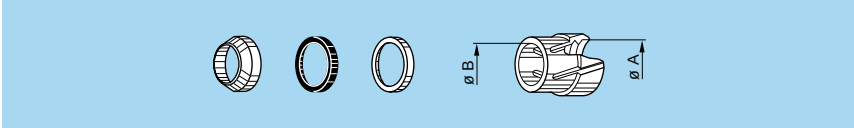

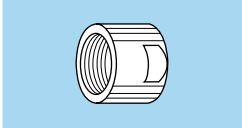

	Reference		Collet ø		Cable ø		Part number of the collet system [1]	Part number of the collet nut
	Type	ø	ø A	ø B	max.	min.		
5K	C	10	11.8	–	10.5	9.6	FFA.5K.710.CNS	FFA.5K.130.LC
	C	11	11.8	–	11.5	10.6	FFA.5K.711.CNS	FFA.5K.130.LC
	C	12	13.8	–	12.5	11.6	FFA.5K.712.CNS	FFA.5K.130.LC
	C	13	13.8	–	13.5	12.6	FFA.5K.713.CNS	FFA.5K.130.LC
	C	14	15.8	–	14.5	13.6	FFA.5K.714.CNS	FFA.5K.130.LC
	C	15	15.8	–	15.5	14.6	FFA.5K.715.CNS	FFA.5K.130.LC
	C	16	17.8	–	16.5	15.6	FFA.5K.716.CNS	FFA.5K.130.LC
	C	17	17.8	–	17.5	16.6	FFA.5K.717.CNS	FFA.5K.130.LC
	C	18	19.8	–	18.5	17.6	FFA.5K.718.CNS	FFA.5K.130.LC
	C	19	19.8	–	19.5	18.6	FFA.5K.719.CNS	FFA.5K.130.LC
	C	20	21.8	–	20.5	19.6	FFA.5K.720.CNS	FFA.5K.130.LC
	C	21	21.8	–	21.5	20.6	FFA.5K.721.CNS	FFA.5K.130.LC
	C	22	23.8	23.8	22.5	21.6	FFA.5K.722.CNS	FFA.5K.130.LC
	C	23	23.8	23.8	23.5	22.6	FFA.5K.723.CNS	FFA.5K.130.LC

Note:
[1] for ordering the collet system separately.

Bend relief collet nut and bend relief

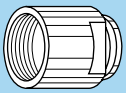

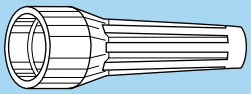

	Reference		Part number of the collet nut	Bend relief to be used [1]
	Type	ø		
0K	C	10 to 50	FFM.0E.130.LC	GMA.0B.●●●.●●
1K	C	15 to 65	FFM.1E.130.LC	GMA.1B.●●●.●●
	K	70 to 85	FFM.2E.130.LC	GMA.2B.●●●.●●
2K	C	15 to 85	FFM.2E.130.LC	GMA.2B.●●●.●●
	K	90 to 11	FFM.3E.130.LC	GMA.3B.●●●.●●
3K	C	30 to 10	FFM.3E.130.LC	GMA.3B.●●●.●●
	K	11 to 15	FFM.4E.130.LC	GMA.4B.●●●.●●
4K	C	50 to 15	FFM.4E.130.LC	GMA.4B.●●●.●●

Note: [1] the bend relief is to be ordered separately (see pages 175 and 176).

All dimensions are in millimetres.

Variant (B and K series)

Colour of the bridge plug shells and connectors shell made of plastic material

The «variant» position of the reference is used to specify the colour of the shell according to the table below.

Ref.	Colour	Ref.	Colour	Ref.	Colour
A	blue	J	yellow	R	red
B[1)]	white	M	brown	S	orange
G[1)]	grey	N	black	V	green

Note: [1)] PSU connector shells are only available in white or grey colours. The variant position is also used to indicate epoxy filling of watertight and vacuumtight socket models, the reference P is used.

Anodized colour

The «variant» position of the reference is used to specify the anodized colour according to the table below.

Part number for connector with standard collet nut

Ref.	Anodized colour	Ref.	Anodized colour
A	blue	R	red
J	yellow	T	natural
N	black	V	green

Part number for connector with collet nut for bend relief

Ref.	Anodized colour
L	black
X	natural

Note: other anodizing colours are available for connectors with collet nut for bend relief. Please consult us.

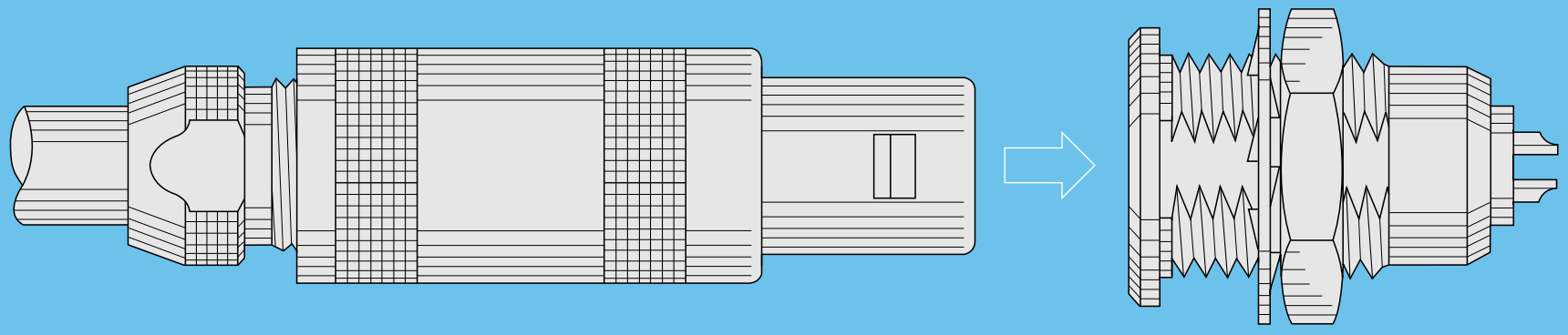

S SERIES

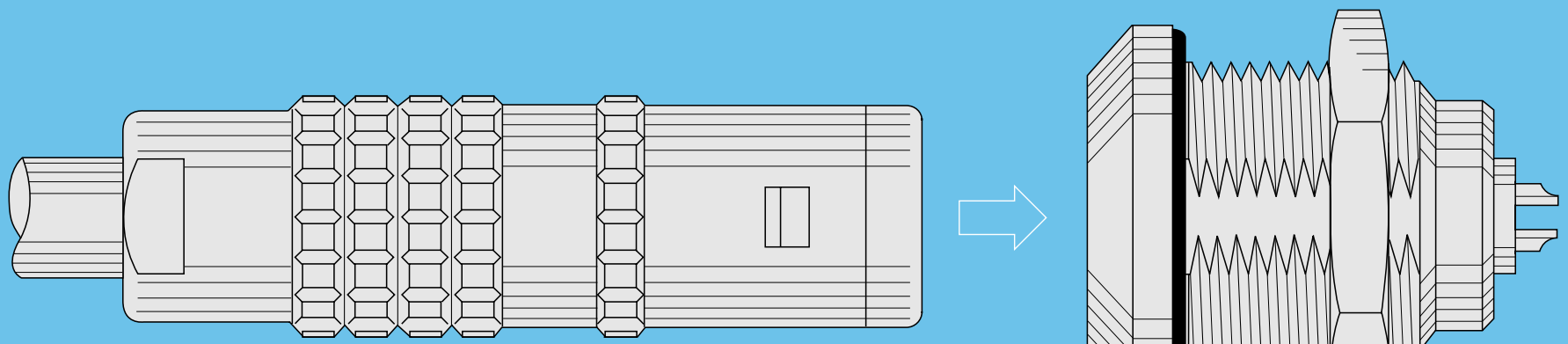

E SERIES (watertight)

S series

S series connectors have main features as follows:
– security of the Push-Pull self-latching system
– unipole types transmitting current up to 230 A and multipole types with up to 106 contacts
– solder or print contacts (straight or elbow)
– polarisation by stepped insert (half-moon) fitted with male and female contacts
– 360° screening for full EMC shielding
– wide range of models satisfying most applications.

Interconnections

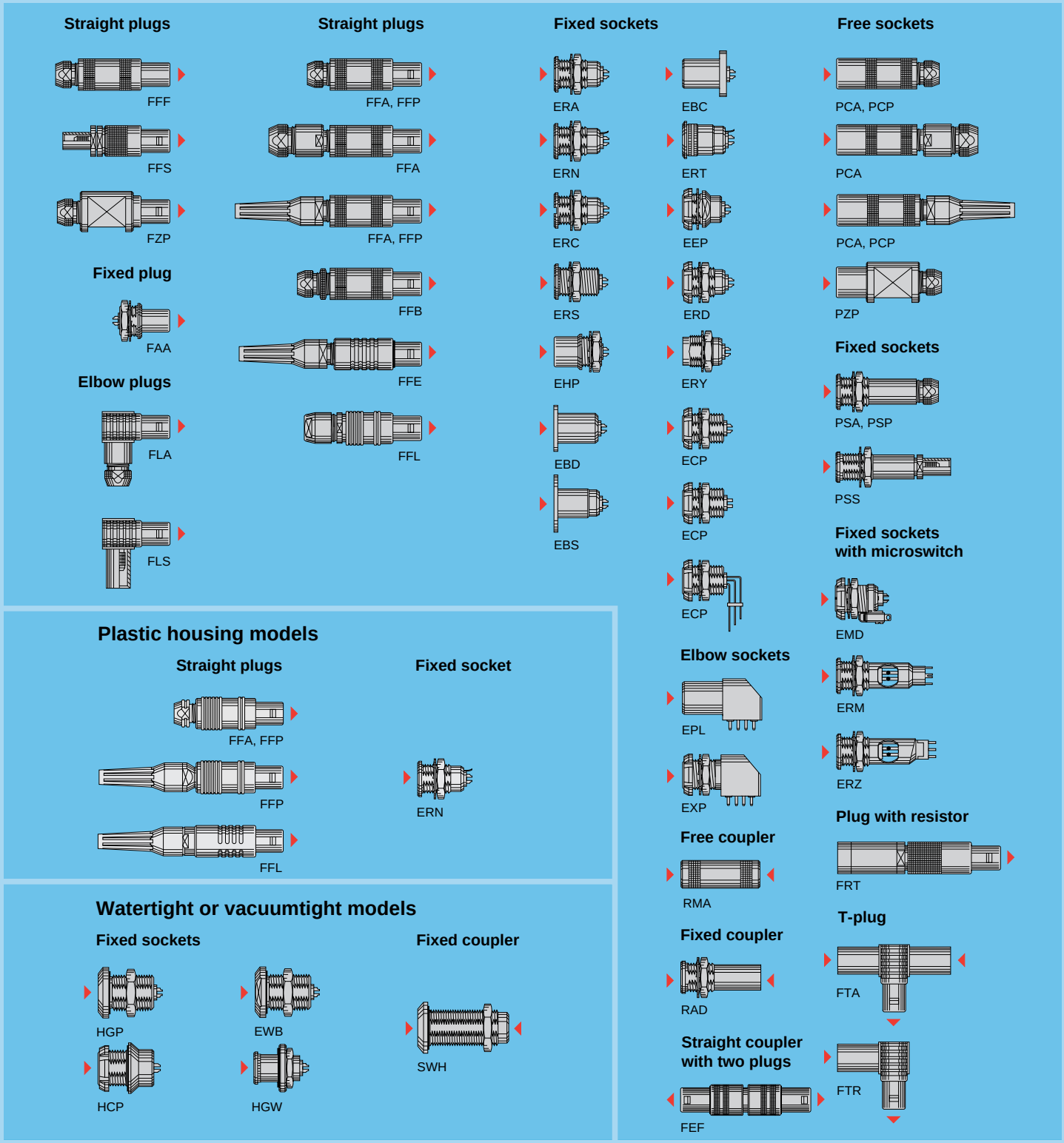

Model Description

EBC Fixed socket with square flange, protruding shell and screw fixing
EBD Fixed socket with square flange and screw fixing
EBS Fixed socket with round flange and screw fixing
ECP Fixed socket with two nuts, long threaded shell (back panel mounting)
ECP Fixed socket with two nuts, long threaded shell, with straight contact for printed circuit (back panel mounting)
ECP Fixed socket with two nuts, long threaded shell, with elbow (90°) contacts for printed circuit (back panel mounting)
EEP Fixed socket, nut fixing (back panel mounting)
EHP Fixed socket, nut fixing, protruding shell
EMD Fixed socket with two nuts and microswitch (back panel mounting)
EPL Elbow (90°) socket for printed circuit
ERA Fixed socket, nut fixing
ERC Fixed socket, nut fixing with slot in the flange
ERD Fixed socket with two nuts (back panel mounting)
ERM Fixed socket, nut fixing with microswitch
ERN Fixed socket, nut fixing, with earthing tag
ERN Fixed socket, nut fixing, with earthing tag, PEEK or POM outer shell
ERS Fixed socket, nut fixing, long threaded shell, without flats
ERT Fixed socket, force fit, with earthing tag
ERY Fixed socket, protruding shell, screw fixing on the panel (back panel mounting)
ERZ Fixed socket, nut fixing with double microswitch and print contacts
EWB Fixed socket, nut fixing, with two flats on the flange, watertight or vacuumtight
EXP Elbow (90°) socket for printed circuit with two nuts (back panel mounting)
FAA Fixed plug non-latching, nut fixing
FEF Straight coupler with two plugs and front seal
FFA Straight plug, cable collet
FFA Straight plug with oversize cable collet
FFA Straight plug, cable collet and nut for fitting a bend relief
FFA Straight plug, cable collet, PEEK or POM outer shell
FFB Straight plug, cable collet and safety locking ring
FFE Straight plug, cable collet, front seal and nut for fitting a bend relief
FFF Straight plug, non-latching, cable collet
FFL Straight plug, flats on latch sleeve, cable collet and inner anti-rotating device
FFL Straight plug, cable collet, with PSU and PPSU outer shell, inner anti-rotating device and nut for fitting a bend relief
FFP Straight plug, cable collet and inner anti-rotating device
FFP Straight plug, cable collet and inner anti-rotating device and nut for fitting a bend relief
FFP Straight plug, cable collet, PEEK or POM outer shell and inner anti-rotating device
FFP Straight plug, cable collet, PEEK or POM outer shell, inner anti-rotating device and nut for fitting a bend relief
FFS Straight plug for cable crimping
FLA Elbow (90°) plug, cable collet
FLS Elbow (90°) plug for cable crimping
FRT Straight plug with resistor
FTA T-plug with two in line sockets
FTR Elbow (90°) plug with socket
FZP Straight plug for remote handling, cable collet and inner anti-rotating device
HCP Fixed socket, nut fixing, watertight or vacuumtight (back panel mounting)
HGP Fixed socket, nut fixing, watertight or vacuumtight
HGW Fixed socket, nut fixing, with back washer, watertight or vacuumtight
PCA Free socket, cable collet
PCA Free socket, with oversize cable collet
PCA Free socket, cable collet and nut for fitting a bend relief
PCP Free socket, cable collet and inner anti-rotating device
PCP Free socket, cable collet and inner anti-rotating device and nut for fitting a bend relief
PSA Fixed socket, nut fixing, cable collet
PSP Fixed socket, nut fixing, cable collet and inner anti-rotating device
PSS Free socket, nut fixing for cable crimping
PZP Free socket for remote handling, cable collet and inner anti-rotating device
RAD Fixed coupler, nut fixing
RMA Free coupler
SWH Fixed coupler, nut fixing, watertight or vacuumtight

Part Section Showing Internal Components

Fixed socket

1. outer shell
2. earthing crown
3. retaining ring
4. hexagonal nut
5. locking washer
6. insulator
7. male contact
8. female contact

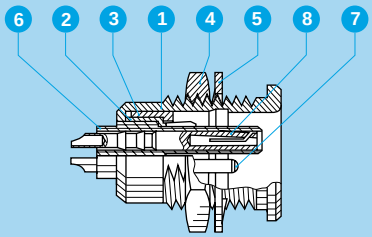

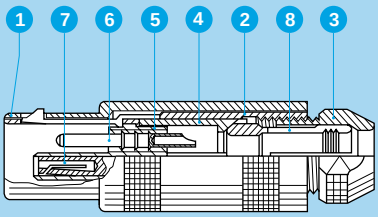

Straight plug

1. outer shell
2. latch sleeve
3. collet nut
4. centre-piece
5. insulator
6. male contact
7. female contact
8. collet

Technical Characteristics

Mechanical and Climatical

Characteristics	Value	Standard
Endurance	> 5000 cycles	IEC 60512-5 test 9a
Humidity	up to 95% at 60° C	
Temperature range[1)]	- 55° C, +250° C	
Resistance to vibrations	10-2000 Hz, 15 g	IEC 60512-4 test 6d
Shock resistance	100 g, 6 ms	IEC 60512-4 test 6c
Salt spray corrosion test	> 144h	IEC 60512-6 test 11f
Protection index (mated)	IP 50	IEC 60529
Climatical category[1)]	55/175/21	IEC 60068-1

Electrical

Characteristics		Value	Standard
Shielding efficiency	at 10 MHz	> 75 dB	IEC 60169-1-3
	at 1 GHz	> 40 dB	IEC 60169-1-3

Note:
The various tests have been carried out with FFA and ERA connector pairs, with chrome-plated brass shell and PEEK insulator.
Detailed electrical characteristics, as well as materials and treatment are presented in the chapter Technical Characteristics on page 197.
[1)] for watertight or vacuumtight models: see page 88.

Available Models (series and types)

Model	Unipole							Multipole						
	00	0S	1S	2S	3S	4S	5S	0S	1S	2S	3S	4S	5S	6S
EBC			●	●	●		●		●	●	●		●	
EBD				●						●				
EBS			●						●					
ECP		●	●	●	●			●	●	●	●			
ECP 1)								●	●	●	●			
EEP				●						●				
EHP		●	●		●			●	●		●			
EMD										●				
EPL		●						●	●					
ERA	●	●	●	●	●	●	●	●	●	●	●	●	●	●
ERC	●	●	●					●	●					
ERD		●	●	●	●	●		●	●	●	●	●		
ERM									●					
ERN		●	●	●	●			●	●	●	●			
ERN 2)	●	●	●	●	●			●	●	●	●			
ERS		●						●						
ERT			●						●					
ERY				●						●				
ERZ									●					
EWB			●	●				●	●	●		●		
EXP								●	●					
FAA	●	●	●	●	●	●		●	●	●	●	●	●	●
FEF													●	
FFA	●	●	●	●	●	●	●	●	●	●	●	●	●	●
FFA 3)	●	●	●	●	●	●		●	●	●	●	●		
FFA 4)	●	●	●	●	●	●		●	●	●	●	●		
FFA 6)	●													
FFB			●	●	●			●	●	●	●			
FFE	●	●	●	●	●			●	●	●	●			

Model	Unipole							Multipole						
	00	0S	1S	2S	3S	4S	5S	0S	1S	2S	3S	4S	5S	6S
FFF	●	●	●	●				●	●	●				
FFL										●				
FFL 5)										●				
FFP		●	●	●	●	●		●	●	●	●	●		
FFP 4)		●	●	●	●	●		●	●	●	●	●		
FFP 2)		●	●	●	●			●	●	●	●			
FFP 6)		●	●	●	●			●	●	●	●			
FFS	●													
FLA	●	●	●	●	●	●		●	●	●	●	●	●	●
FLS	●													
FRT	●													
FTA	●	●	●		●			●	●					
FTR	●				●	●								
FZP			●	●	●	●	●		●	●	●	●	●	●
HCP			●	●		●			●	●		●		
HGP		●	●	●	●	●	●	●	●	●	●	●	●	●
HGW								●	●					
PCA	●	●	●	●	●	●		●	●	●	●	●	●	●
PCA 3)	●	●	●	●	●	●		●	●	●	●	●		
PCA 4)	●	●	●	●	●	●		●	●	●	●	●		
PCP		●	●	●	●	●		●	●	●	●	●		
PCP 4)		●	●	●	●	●		●	●	●	●	●		
PSA	●	●	●	●	●	●		●	●	●	●	●	●	●
PSP		●	●	●	●	●		●	●	●	●	●		
PSS	●													
PZP			●	●	●				●	●	●			
RAD	●	●	●	●	●	●		●	●	●	●	●	●	
RMA	●	●	●	●	●	●		●	●	●	●	●	●	
SWH		●	●	●	●			●	●	●	●	●	●	●

Note:
1) with elbow (90°) print contact
2) with PEEK or POM outer shell
3) with oversize collet
4) with nut for fitting a bend relief
5) with PSU outer shell
6) with PEEK or POM outer shell
● = available models by series and types

Part Number Example

Straight plug with cable collet

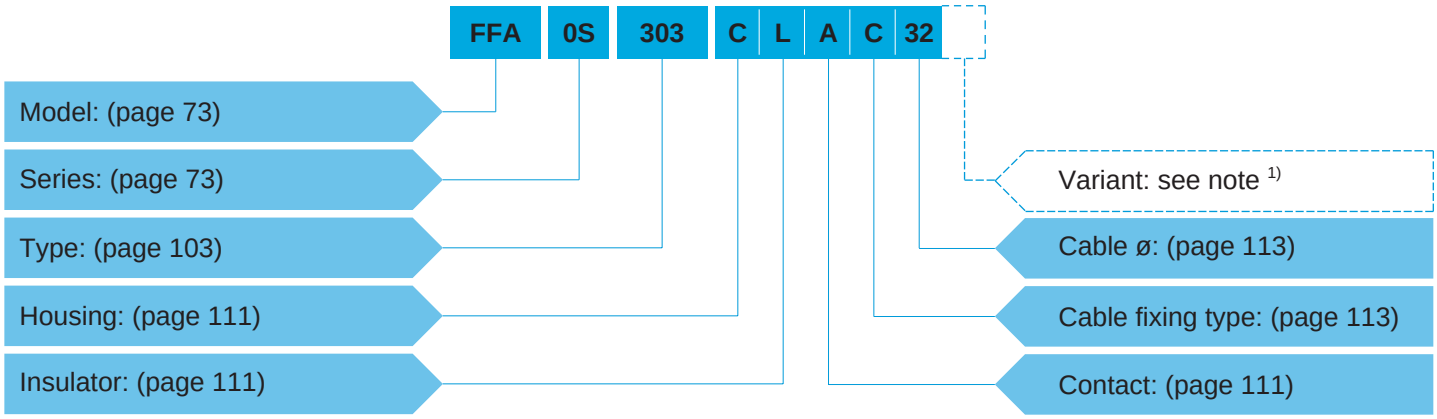

FFA.0S.303.CLAC32 = straight plug with cable collet, 0S series, multipole type with 3 contacts, outer shell in chrome-plated brass, PEEK insulator, 2 male and 1 female solder contacts, C type collet for a 3.2 mm diameter cable.

Fixed socket

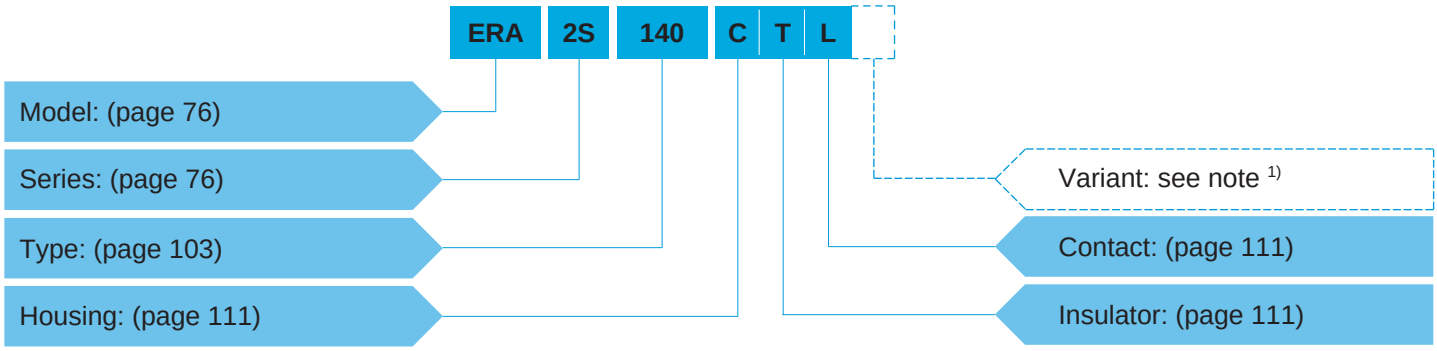

ERA.2S.140.CTL = fixed socket, nut fixing, 2S series, unipole type ø 4.0 mm contacts, chrome-plated brass outer shell, PTFE insulator, female solder contact.

Fixed coupler

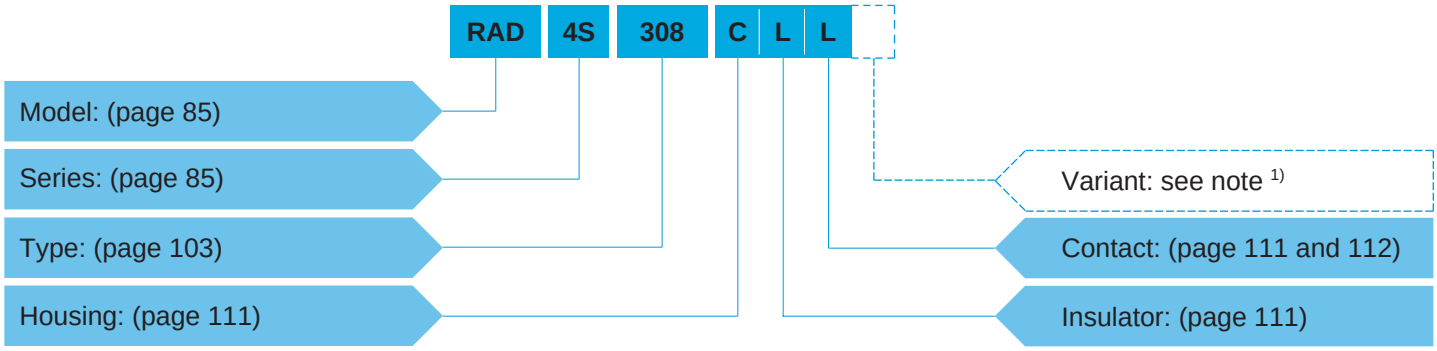

RAD.4S.308.CLL = straight coupler, nut fixing, 4S series, multipole type with 8 contacts, chrome-plated brass outer shell, PEEK insulator, 4 female and 4 male contacts each end.

Note: 1) the «Variant» position of the part number is used to specify either the presence of a nut for fitting a bend relief, or the anodized colour of the aluminium housings or the colour of housings using plastic material.
For models with collet nut for fitting a bend relief, a «Z» should be indicated and a bend relief can be ordered separately as indicated in the «Accessories» section. An order for a connector with bend relief should thus include two part numbers.
For the various housings available in colours, the corresponding letter in the part number for the colour is indicated on page 124.
For the watertight models of socket, the letter «P» is used; for the vacuumtight models of socket the letters «PV» shall be indicated.

Models - Series

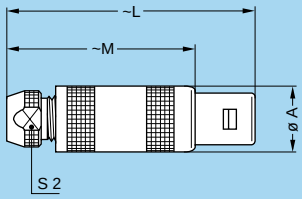

FFA Straight plug, cable collet

Reference		Dimensions (mm)			
Model	Series	A	L	M	S2
FFA	00	6.4	26.0	18.0	4.5
FFA	0S	9.0	34.5	24.5	6.5
FFA	1S	12.0	42.5	31.5	8.5
FFA	2S	14.8	52.0	40.0	11.0
FFA	3S	17.8	61.0	46.0	14.0
FFA	4S	24.8	77.0	59.0	19.0
FFA	5S	35.1	103.0	78.0	29.0
FFA	6S	46.0	106.0	81.0	38.0

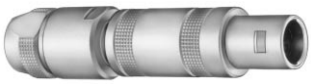

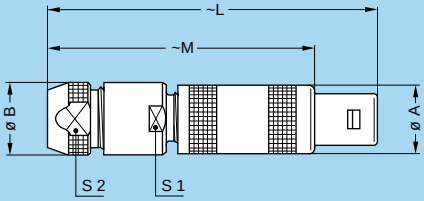

FFA Straight plug with oversize cable collet

Reference		Dimensions (mm)					
Model	Series	A	B	L	M	S1	S2
FFA	00	6.4	8.0	34.0	26.0	7.0	6.5
FFA	0S	9.0	10.0	45.5	35.5	9.0	8.5
FFA	1S	12.0	13.0	57.0	46.0	12.0	11.0
FFA	2S	14.8	18.0	67.0	55.0	14.0	14.0
FFA	3S	17.8	21.0	85.0	70.0	19.0	19.0
FFA	4S	24.8	31.8	107.0	89.0	28.5	29.0
FFA	5S	35.1	41.8	138.0	113.0	37.5	38.0

Note: the fitting of oversize collets onto this model allows them to be fitted to the cables that can be accommodated by the next housing size up.

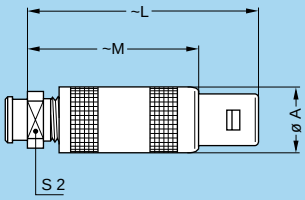

FFA Straight plug, cable collet and nut for fitting a bend relief

Reference		Dimensions (mm)			
Model	Series	A	L	M	S2
FFA	00	6.4	26.0	18.0	6
FFA	0S	9.0	34.5	24.5	7
FFA	1S	12.0	42.5	31.5	9
FFA	2S	14.8	52.0	40.0	12
FFA	3S	17.8	61.0	46.0	14
FFA	4S	24.8	77.0	59.0	20

Note: the bend relief must be ordered separately (see page 175).

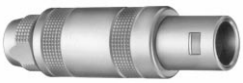

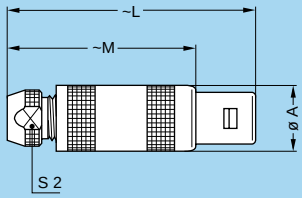

FFP Straight plug, cable collet and inner anti-rotating device

Reference		Dimensions (mm)			
Model	Series	A	L	M	S2
FFP	0S	9.0	34.5	24.5	6.5
FFP	1S	12.0	42.5	31.5	8.5
FFP	2S	14.8	52.0	40.0	11.0
FFP	3S	17.8	61.0	46.0	14.0
FFP	4S	24.8	77.0	59.0	19.0

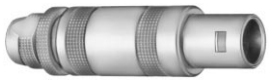

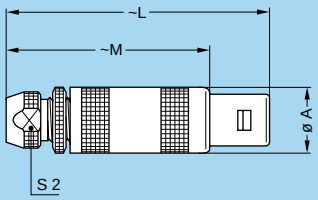

FFB Straight plug, cable collet and safety locking ring

Reference		Dimensions (mm)			
Model	Series	A	L	M	S2
FFB	0S	9.0	36.8	26.8	6.5
FFB	1S	12.0	45.0	34.0	8.5
FFB	2S	14.8	55.5	43.5	11.0
FFB	3S	17.8	65.0	50.0	14.0

Note: not available with nut for fitting a bend relief.

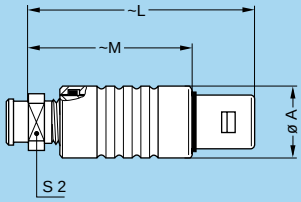

FFE Straight plug, cable collet, front seal and nut for fitting a bend relief (protected to IP54 when mated)

Reference		Dimensions (mm)			
Model	Series	A	L	M	S2
FFE	00	7.4	26.0	18.0	6
FFE	0S	10.0	34.5	24.5	7
FFE	1S	13.0	42.5	31.5	9
FFE	2S	16.0	52.0	40.0	12
FFE	3S	19.0	61.0	46.0	14

Note: the bend relief must be ordered separately (see page 175).

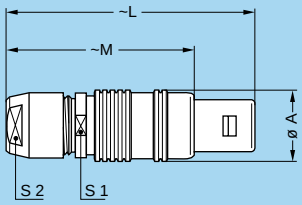

FFL Straight plug, flats on latch sleeve, cable collet and inner anti-rotating device

Reference		Dimensions (mm)				
Model	Series	A	L	M	S1	S2
FFL	2S	15.0	49.0	37.0	13	12

Note: this model is fitted with a «D or M» type collet system (see page 206). It is also adapted for crimp contacts.

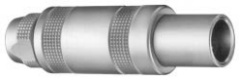

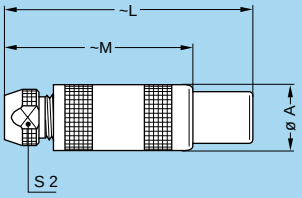

FFF Straight plug, non-latching, cable collet

Reference		Dimensions (mm)			
Model	Series	A	L	M	S2
FFF	00	6.4	26.0	18.0	4.5
FFF	0S	9.0	34.5	24.5	6.5
FFF	1S	12.0	42.5	31.5	8.5
FFF	2S	14.8	52.0	40.0	11.0

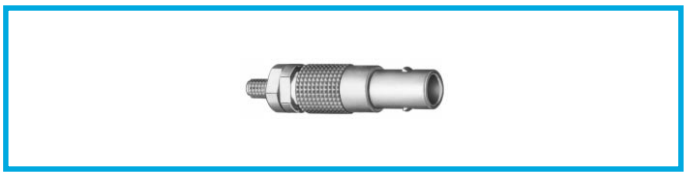

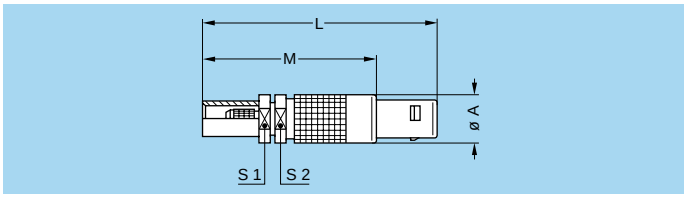

FFS Straight plug for cable crimping

Reference		Dimensions (mm)				
Model	Series	A	L	M	S1	S2
FFS	00	6.4	31	23	5.5	5.5

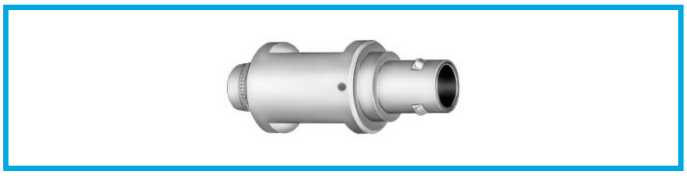

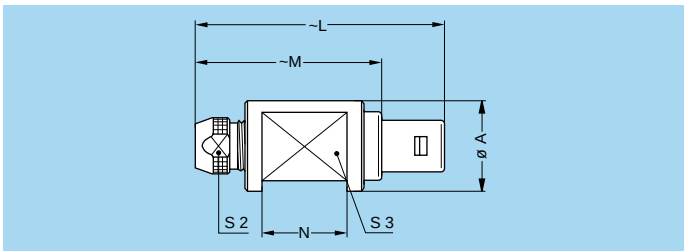

FZP Straight plug for remote handling, cable collet and inner anti-rotating device

Reference		Dimensions (mm)					
Model	Series	A	L	M	N	S2	S3
FZP	1S	16	42.5	31.5	15	8.5	12
FZP	2S	24	52.0	40.0	21	11.0	18
FZP	3S	24	61.0	46.0	24	14.0	18
FZP	4S	35	77.0	59.0	30	19.0	28
FZP	5S	43	103.0	78.0	44	29.0	35
FZP	6S	60	106.0	81.0	44	38.0	50

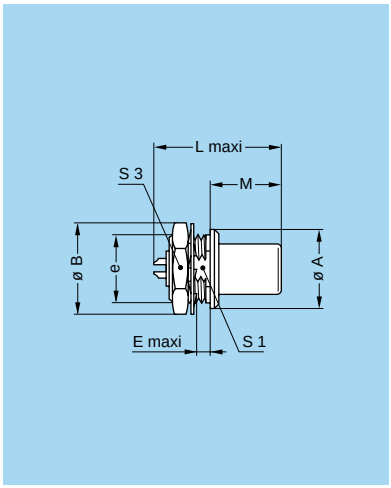

FAA Fixed plug non-latching, nut fixing

Reference		Dimensions (mm)								
Model	Series	A	B	e	E	L	L[1)]	M	S1	S3
FAA	00	8	10.3	M7x0.5	2.0	–	15.5	9.0	6.3	9
FAA	0S	10	12.5	M9x0.6	2.0	18.5	18.0	11.2	8.2	11
FAA	1S	14	16.0	M12x1.0	2.5	22.5	21.7	12.5	10.5	14
FAA	2S	18	19.5	M15x1.0	4.0	25.0	25.3	13.8	13.5	17
FAA	3S	22	25.2	M18x1.0	4.0	31.0	29.0	17.0	16.5	22
FAA	4S	28	32.0	M25x1.0	2.5	35.5	39.0	20.5	23.5	30
FAA	5S	40	40.0	M35x1.0	2.5	45.0	–	28.0	33.5	–
FAA	6S	54	54.0	M48x1.5	2.5	45.0	–	28.0	–	–

Panel cut-out: **P1** Panel cut-out: **P2** 6S series

Note: [1)] unipole model

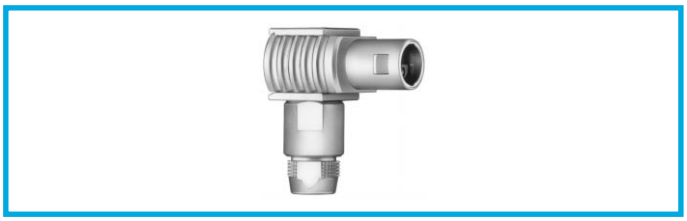

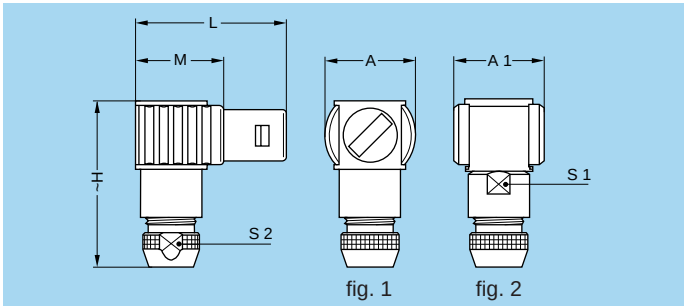

FLA Elbow (90°) plug, cable collet

Reference		Dimensions (mm)						
Model	Series	A	A1	H	L	M	S1	S2
FLA	00	9	–	16.0	17.5	9.5	–	4.5
FLA	0S	13	13	24.5	23.0	13.0	8	6.5
FLA	1S	16	16	28.5	26.5	15.5	10	8.5
FLA	2S	20	20	37.0	31.0	19.0	13	11.0
FLA	3S	21	21	44.0	38.5	23.5	15	14.0
FLA	4S	28	28	56.0	49.0	31.0	20	19.0
FLA	5S	–	37	76.5	65.0	40.0	30	29.0
FLA	6S	–	48	94.0	81.0	56.0	40	38.0

Note:
fig. 1 is used for the unipole type, fig. 2 is used for the multipole type.

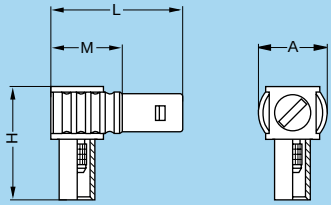

FLS Elbow (90°) plug for cable crimping

Reference		Dimensions (mm)			
Model	Series	A	H	L	M
FLS	00	9	16	17.5	9.5

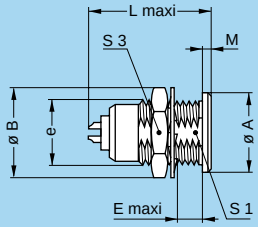

ERA Fixed socket, nut fixing

Reference		Dimensions (mm)								
Model	Series	A	B	e	E	L	L[1)]	M	S1	S3
ERA	00	8	10.3	M7x0.5	5.5	–	15.2	1.0	6.3	9
ERA	0S	10	12.5	M9x0.6	7.0	17.5	18.5	1.2	8.2	11
ERA	1S	14	16.0	M12x1.0	7.5	20.2	21.5	1.5	10.5	14
ERA	2S	18	19.5	M15x1.0	8.5	24.5	26.0	1.8	13.5	17
ERA	3S	22	25.2	M18x1.0	11.5	29.0	30.0	2.0	16.5	22
ERA	4S	28	32.0	M25x1.0	12.0	34.0	36.0	2.5	23.5	30
ERA	5S	40	40.0	M35x1.0	15.5	45.0	78.5	3.0	33.5	–
ERA	6S	54	54.0	M48x1.5	16.0	45.0	–	3.5	45.5	–

Panel cut-out: **P1**

Note: 1) unipole model

Note: the 5S series is delivered with a tapered washer and a round nut. The 6S series is delivered without a locking washer and with a round nut.

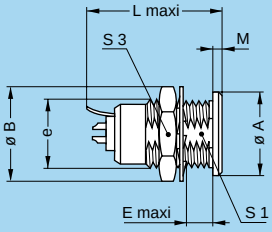

ERN Fixed socket, nut fixing, with earthing tag

Reference		Dimensions (mm)								
Model	Series	A	B	e	E	L	L[1)]	M	S1	S3
ERN	0S	10	12.5	M9x0.6	7.0	19.3	19.3	1.2	8.2	11
ERN	1S	14	16.0	M12x1.0	7.5	23.0	23.0	1.5	10.5	14
ERN	2S	18	19.5	M15x1.0	8.5	26.3	26.3	1.8	13.5	17
ERN	3S	22	25.2	M18x1.0	11.5	29.8	30.0	2.0	16.5	22

Panel cut-out: **P1**

Note: 1) unipole model

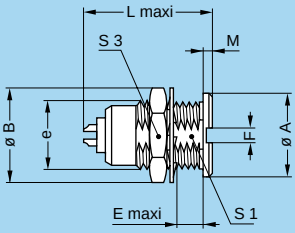

ERC Fixed socket, nut fixing with slot in the flange

Reference		Dimensions (mm)									
Model	Series	A	B	e	E	F	L	L[1)]	M	S1	S3
ERC	00	8	10.3	M7x0.5	5.5	1.6	–	15.1	1.0	6.3	9
ERC	0S	10	12.5	M9x0.6	7.0	2.0	17.5	18.5	1.2	8.2	11
ERC	1S	14	16.0	M12x1.0	7.5	2.5	20.2	21.5	1.5	10.5	14

Panel cut-out: **P1**

Note: 1) unipole model

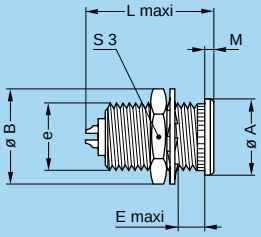

ERS Fixed socket, nut fixing, long threaded shell, without flats

Reference		Dimensions (mm)							
Model	Series	A	B	e	E	L	L[1)]	M	S3
ERS	0S	10	12.5	M9x0.6	10.5	17.5	18.5	1.2	11

Panel cut-out: **P2**

Note: [1)] unipole model

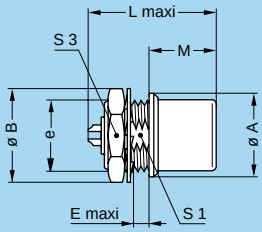

EHP Fixed socket, nut fixing, protruding shell

Reference		Dimensions (mm)								
Model	Series	A	B	e	E	L	L[1)]	M	S1	S3
EHP	0S	10	12.5	M9x0.6	2.5	17.5	18.5	12.5	8.2	11
EHP	1S	14	16.0	M12x1.0	3.5	20.2	21.5	12.0	–	14
EHP	3S	22	25.2	M18x1.0	4.0	29.0	30.0	18.7	–	22

Panel cut-out: **P2** Panel cut-out: **P1** 0S series

Note: [1)] unipole model

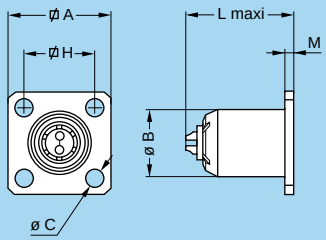

EBD Fixed socket with square flange and screw fixing

Reference		Dimensions (mm)						
Model	Series	A	B	C	H	L	L[1)]	M
EBD	2S	22	15	3.2	15.5	24.5	26	2

Panel cut-out: **P6**

Note: [1)] unipole model

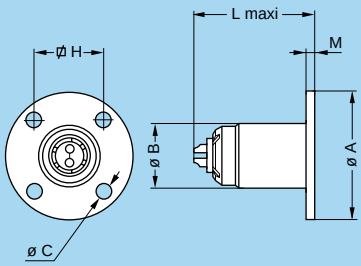

EBS Fixed socket with round flange and screw fixing

Reference		Dimensions (mm)						
Model	Series	A	B	C	H	L	L[1)]	M
EBS	1S	22	11	2.5	12.4	20.2	21.5	1.5

Panel cut-out: **P7**

Note: [1)] unipole model

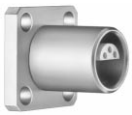

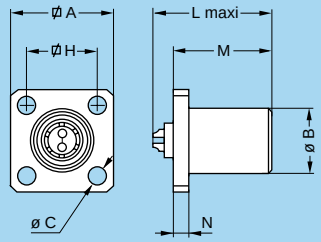

EBC Fixed socket with square flange, protruding shell and screw fixing

Reference		Dimensions (mm)							
Model	Series	A	B	C	H	L	L[1)]	M	N
EBC	1S	18	11.5	3.2	12.7	20.2	21.5	16.5	2.8
EBC	2S	22	15.0	3.2	15.5	24.5	26.0	18.5	4.4
EBC	3S	25	18.0	3.2	18.0	29.0	30.0	23.5	3.0
EBC	5S	45	40.0	4.3	36.8	45.0	53.5	15.0	4.0

Panel cut-out: **P6**

Note: 1) unipole model

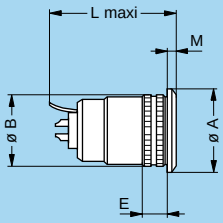

ERT Fixed socket, force fit, with earthing tag

Reference		Dimensions (mm)					
Model	Series	A	B	E	L	L[1)]	M
ERT	1S	14	11.98	3.5	20.2	21.5	1.5

Panel cut-out: **P5**

Note: 1) unipole model

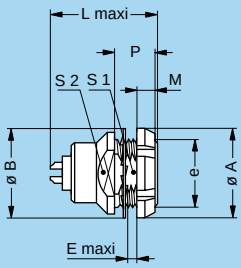

EEP Fixed socket, nut fixing (back panel mounting)

Reference		Dimensions (mm)									
Model	Series	A	B	e	E	L	L[1)]	M	P	S1	S2
EEP	2S	20	19.5	M15x1.0	3.5	24.5	26	3.5	9	13.5	15

Panel cut-out: **P1**

Note: 1) unipole model

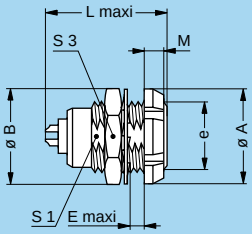

ERD Fixed socket with two nuts (back panel mounting)

Reference		Dimensions (mm)								
Model	Series	A	B	e	E	L	L[1)]	M	S1	S3
ERD	0S	12	12.5	M9x0.6	5.5	17.5	18.5	2.5	8.2	11
ERD	1S	16	16.0	M12x1.0	6.0	20.2	21.5	3.5	10.5	14
ERD	2S	20	19.5	M15x1.0	6.5	24.5	26.0	3.5	13.5	17
ERD	3S	24	25.2	M18x1.0	9.0	29.0	30.0	4.5	16.5	22
ERD	4S	30	32.0	M25x1.0	10.0	34.0	36.0	4.5	23.5	30

Panel cut-out: **P1**

Note: 1) unipole model.
The 3S and 4S series are delivered with a conical nut.

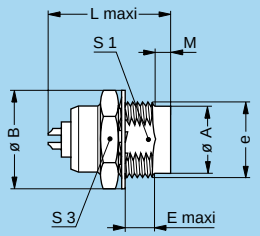

ERY Fixed socket, protruding shell, screw fixing on the panel (back panel mounting)

Reference		Dimensions (mm)								
Model	Series	A	B	e	E	L	L[1)]	M	S1	S3
ERY	2S	13.5	19.5	M15x1.0	6	24.5	26	3.1	13.5	17

Panel cut-out: **P1**

Note: [1)] unipole model

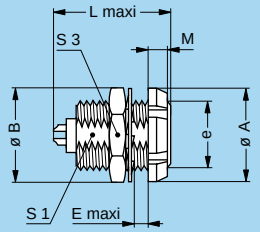

ECP Fixed socket with two nuts, long threaded shell (back panel mounting)

Reference		Dimensions (mm)								
Model	Series	A	B	e	E	L	L[1)]	M	S1	S3
ECP	0S	12	12.5	M9x0.6	8.5	17.5	18.5	2.5	8.2	11
ECP	1S	16	16.0	M12x1.0	10.0	20.2	21.5	3.5	10.5	14
ECP	2S	20	19.5	M15x1.0	11.0	24.5	26.0	3.5	13.5	17
ECP	3S	24	25.2	M18x1.0	14.0	29.0	30.0	4.5	16.5	22

Panel cut-out: **P1**

Note: [1)] unipole model.
The 3S series is delivered with a conical nut.

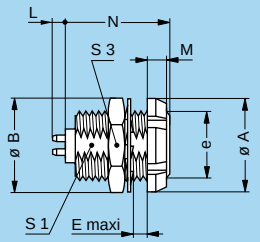

ECP Fixed socket with two nuts, long threaded shell, with straight contact for printed circuit (back panel mounting)

Reference		Dimensions (mm)							
Model	Series	A	B	e	E	M	N	S1	S3
ECP	0S	12	12.5	M9x0.6	8.5	2.5	15.0	8.2	11
ECP	1S	16	16.0	M12x1.0	10.0	3.5	17.5	10.5	14
ECP	2S	20	19.5	M15x1.0	11.0	3.5	20.0	13.5	17
ECP	3S	24	25.2	M18x1.0	14.0	4.5	24.0	16.5	22

Panel cut-out: **P1** PCB drilling pattern: **P21**

Note: this contact type is available for all E●● socket models.
See page 195 for table of available types.
Length «L» depends on the number of contacts, see table on page 195.
The 3S series is delivered with a conical nut.

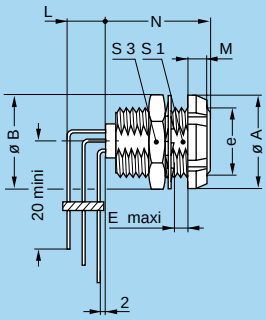

ECP Fixed socket with two nuts, long threaded shell, with elbow (90°) contacts for printed circuit (back panel mounting)

Reference		Dimensions (mm)							
Model	Series	A	B	e	E	M	N	S1	S3
ECP	0S	12	12.5	M9x0.6	8.5	2.5	15.0	8.2	11
ECP	1S	16	16.0	M12x1.0	10.0	3.5	17.5	10.5	14
ECP	2S	20	19.5	M15x1.0	11.0	3.5	20.0	13.5	17
ECP	3S	24	25.2	M18x1.0	14.0	4.5	24.0	16.5	22

Panel cut-out: **P1** PCB drilling pattern: **P24**

Note: this contact type is available for all back panel mounting socket types.
See page 196 for available types.
Length «L» depends on the number of contacts, see PCB drilling pattern on page 196.
The 3S series is delivered with a conical nut.

Elbow (90°) sockets for printed circuit

These socket models are fixed onto the printed circuit either by soldering the corner pins or with 4 screws (M1.6) replacing the pins.
EXP sockets are 2 nut fixing and are recommended in cases where a flexible printed circuit is used.

Technical Characteristics

Types

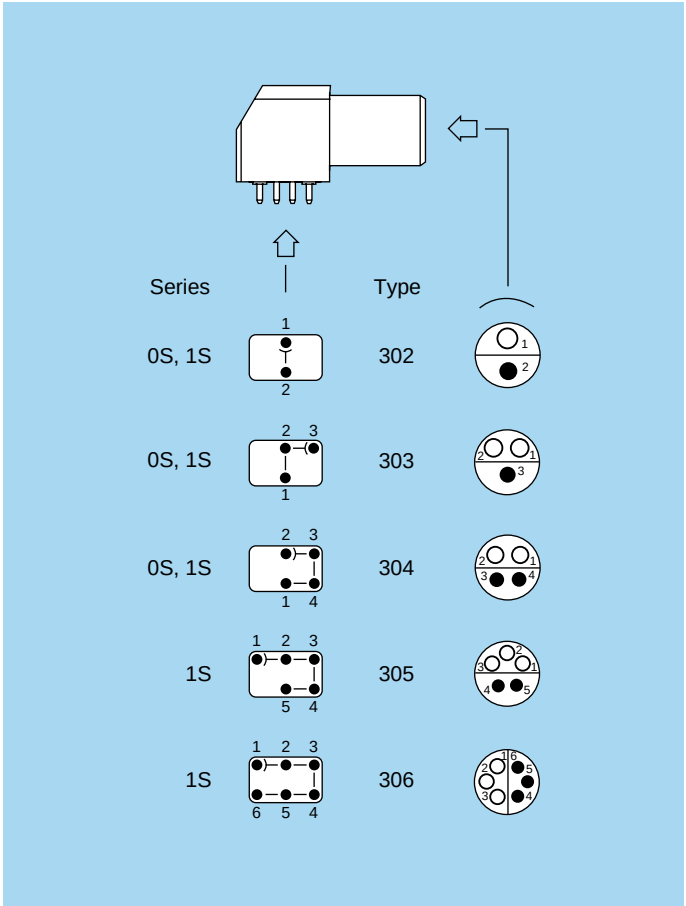

Materials and Treatment

Component	Material	Surface Treat. (µm)		
		Cu	Ni	Au
Housing	PPS [1]	–		
	Brass	0.5	3	–
Metallic parts	Brass	0.5	3	–
Earthing crown	Bronze	0.5	3	–
Insulator	PEEK	–		
Female contact	Bronze	0.5	3	1.5

Note: [1] not used for all sizes.
The surface treatment standards are as follows:
– Nickel FS QQ-N-290A
– Gold: ISO 4523

Electrical

Model	Series	Types	Test voltage (kV rms)[1]	Rated current (A)
EPL	0S	302-303-304	1.20	4.5
EXP	0S			
EPL	1S			
EXP	1S			
EPL	1S	305-306	0.70	4.5
EXP	1S			

Note:
[1] see calculation method, caution and suggested standard on page 204.

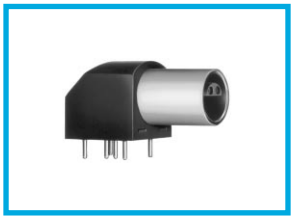

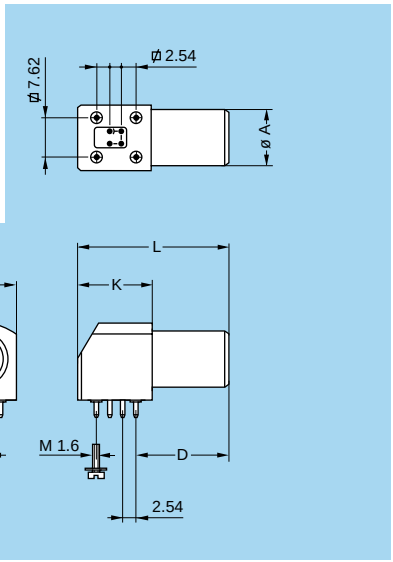

EPL Elbow (90°) socket for printed circuit (solder or screw fixing)

Part Number	Dimensions (mm)						
	A	D	H	I	K	L	N
EPL.0S.302.HLN	9	14.5	6.9	12.7	13.2	25	11.6
EPL.0S.303.HLN							
EPL.0S.304.HLN							
EPL.1S.302.HLN	11	16.5	7.7	14.0	13.2	27	12.6
EPL.1S.303.HLN							
EPL.1S.304.HLN							
EPL.1S.305.HLN							
EPL.1S.306.HLN							

Note: to replace the 4 ground pins by 4 screws (M1.6) add an «S» to the end of the part number. (e.g.: EPL.1S.303.HLNS)

PCB drilling pattern: **P22**

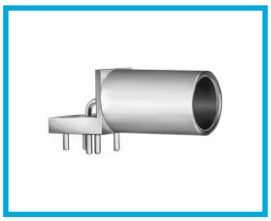

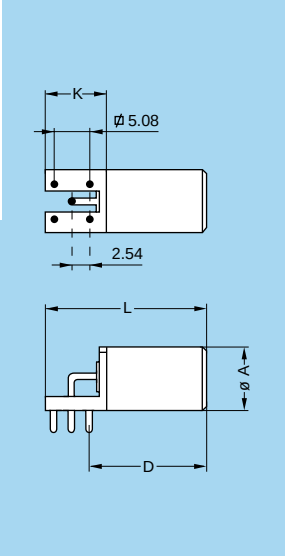

EPL Elbow (90°) socket for printed circuit

Part Number	Dimensions (mm)						
	A	D	H	I	K	L	N
EPL.0S.116.DTL	8.8	16	12	9	7.7	22.7	9

Note: available only in unipole version.

PCB drilling pattern: **P23**

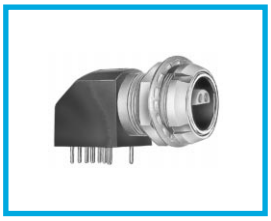

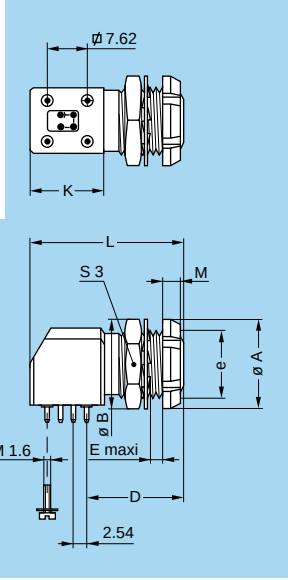

EXP Elbow (90°) socket for printed circuit with two nuts (solder or screw fixing)

Part Number	Dimensions (mm)											
	A	B	D	e	E	H	I	K	L	M	N	S3
EXP.0S.302.HLN	12	12.5	14.5	M9x0.6	6.0	6.9	12.7	13.2	25	2.5	11.6	11
EXP.0S.303.HLN												
EXP.0S.304.HLN												
EXP.1S.302.HLN	14	15.0	16.5	M11x0.5	7.5	7.7	14.0	13.2	27	3.5	12.6	13
EXP.1S.303.HLN												
EXP.1S.304.HLN												
EXP.1S.305.HLN												
EXP.1S.306.HLN												

Note: to replace the 4 ground pins by 4 screws (M1.6) add an «S» to the end of the part number. (e.g.: EXP.1S.303.HLNS).

Panel cut-out: **P2** 0S series

Panel cut-out: **P10** 1S series

PCB drilling pattern: **P22**

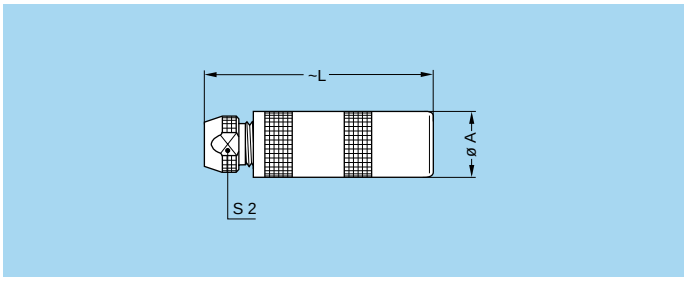

PCA Free socket, cable collet

Reference		Dimensions (mm)		
Model	Series	A	L	S2
PCA	00	6.5	25.0	4.5
PCA	0S	8.9	33.5	6.5
PCA	1S	11.9	40.5	8.5
PCA	2S	14.8	50.0	11.0
PCA	3S	17.8	59.0	14.0
PCA	4S	24.8	75.0	19.0
PCA	5S	34.7	99.0	29.0
PCA	6S	46.0	102.0	38.0

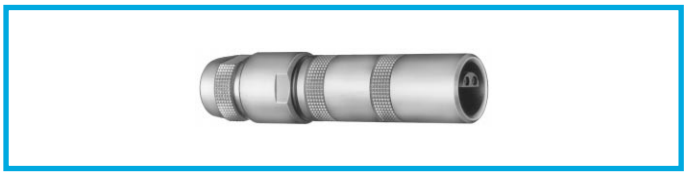

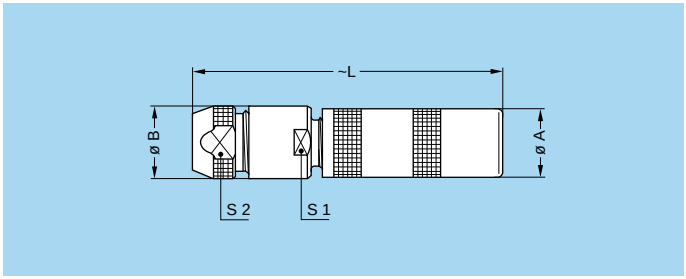

PCA Free socket with oversize cable collet

Reference		Dimensions (mm)				
Model	Series	A	B	L	S1	S2
PCA	00	6.5	8.0	33.0	7.0	6.5
PCA	0S	8.9	10.0	44.5	9.0	8.5
PCA	1S	11.9	13.0	55.0	12.0	11.0
PCA	2S	14.8	18.0	65.0	14.0	14.0
PCA	3S	17.8	21.0	83.0	19.0	19.0
PCA	4S	24.8	31.8	105.0	28.5	29.0

Note: the fitting of oversize collets onto this model allows it to be fitted to the cables that can be accommodated by the next housing size up.

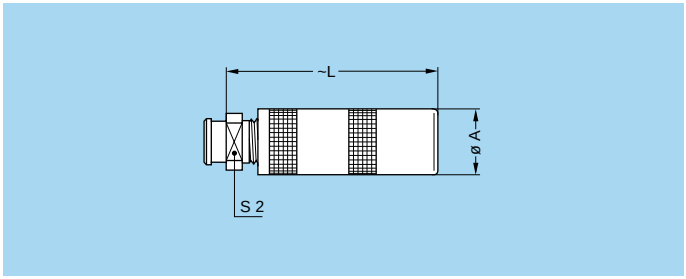

PCA Free socket, cable collet and nut for fitting a bend relief

Reference		Dimensions (mm)		
Model	Series	A	L	S2
PCA	00	6.5	25.0	6
PCA	0S	8.9	33.5	7
PCA	1S	11.9	40.5	9
PCA	2S	14.8	50.0	12
PCA	3S	17.8	59.0	14
PCA	4S	24.8	75.0	20

Note: the bend relief must be ordered separately (see page 175).

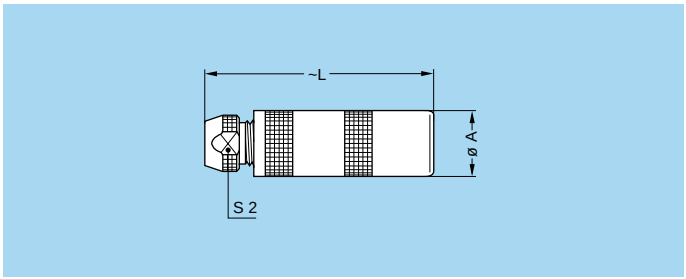

PCP Free socket, cable collet and inner anti-rotating device

Reference		Dimensions (mm)		
Model	Series	A	L	S2
PCP	0S	8.9	33.5	6.5
PCP	1S	11.9	40.5	8.5
PCP	2S	14.8	50.0	11.0
PCP	3S	17.8	59.0	14.0
PCP	4S	24.8	75.0	19.0

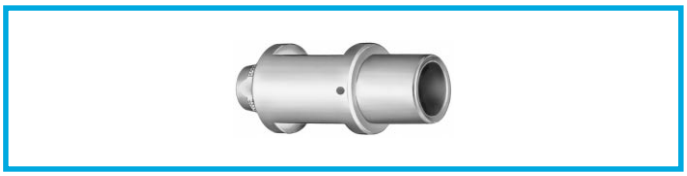

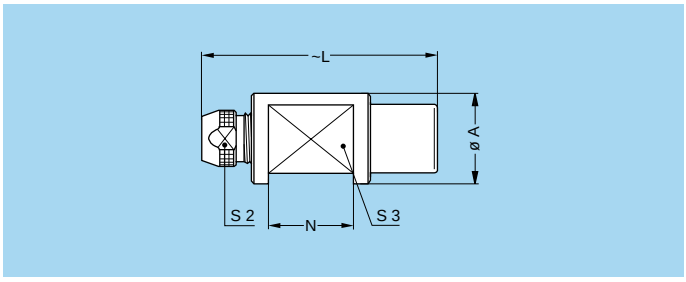

PZP Free socket for remote handling with cable collet and inner anti-rotating device

Reference		Dimensions (mm)				
Model	Series	A	L	N	S2	S3
PZP	1S	16	40.5	15	8.5	12
PZP	2S	24	50.0	21	11.0	18
PZP	3S	24	59.0	24	14.0	18

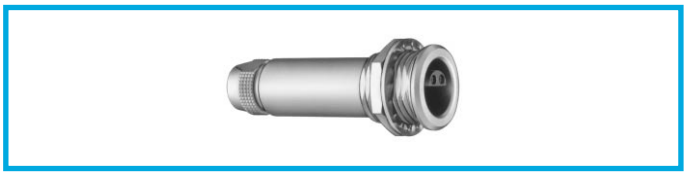

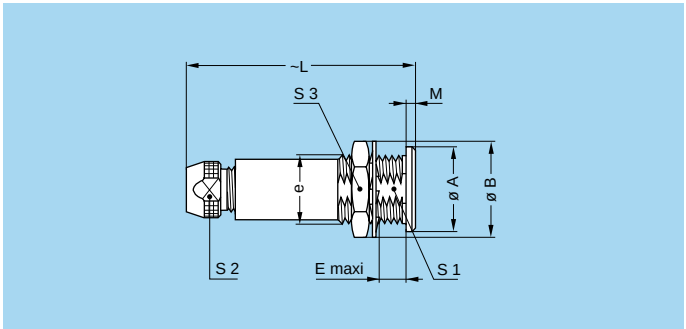

PSA Fixed socket, nut fixing, cable collet

Reference		Dimensions (mm)								
Model	Series	A	B	e	E	L	M	S1	S2	S3
PSA	00	8	10.3	M7x0.5	5.5	25.0	1.0	6.3	4.5	9
PSA	0S	10	12.5	M9x0.6	7.0	33.5	1.2	8.2	6.5	11
PSA	1S	14	16.0	M12x1.0	7.5	40.5	1.5	10.5	8.5	14
PSA	2S	18	19.5	M15x1.0	8.5	50.0	1.8	13.5	11.0	17
PSA	3S	22	25.2	M18x1.0	11.5	59.0	2.0	16.5	14.0	22
PSA	4S	28	32.0	M25x1.0	12.0	75.0	2.5	23.5	19.0	30
PSA	5S	40	40.0	M35x1.0	15.5	99.0	3.0	33.5	29.0	–
PSA	6S	54	54.0	M48x1.5	16.0	102.0	3.5	45.5	38.0	–

Panel cut-out: **P1**

Note: the 5S series is delivered with a tapered washer and a round nut. The 6S series is delivered without a locking washer and with a round nut.

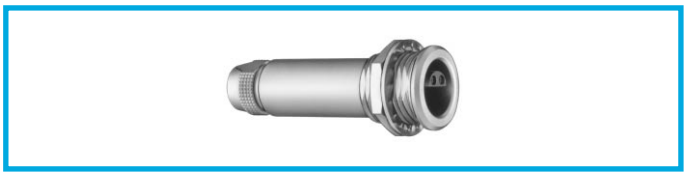

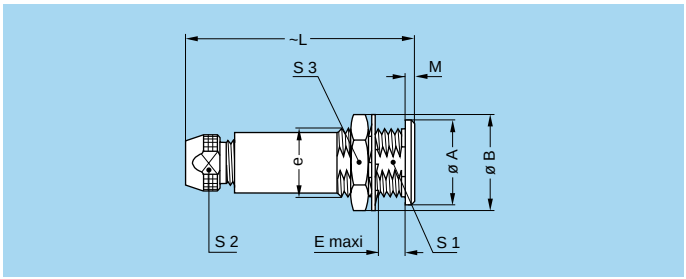

PSP Fixed socket, nut fixing, cable collet and inner anti-rotating device

Reference		Dimensions (mm)								
Model	Series	A	B	e	E	L	M	S1	S2	S3
PSP	0S	10	12.5	M9x0.6	7.0	33.5	1.2	8.2	6.5	11
PSP	1S	14	16.0	M12x1.0	7.5	40.5	1.5	10.5	8.5	14
PSP	2S	18	19.5	M15x1.0	8.5	50.0	1.8	13.5	11.0	17
PSP	3S	22	25.2	M18x1.0	11.5	59.0	2.0	16.5	14.0	22
PSP	4S	28	32.0	M25x1.0	12.0	75.0	2.5	23.5	19.0	30

Panel cut-out: **P1**

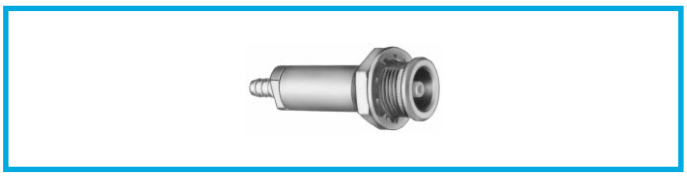

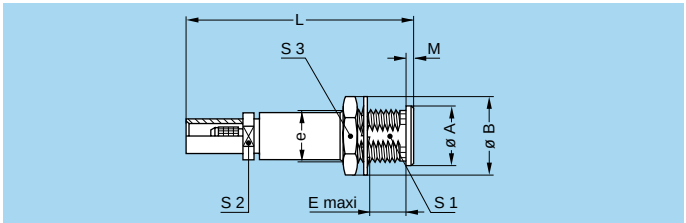

PSS Free socket, nut fixing for cable crimping

Reference		Dimensions (mm)								
Model	Series	A	B	e	E	L	M	S1	S2	S3
PSS	00	8	10.3	M7x0.5	5.5	30	1	6.3	5.5	9

Panel cut-out: **P1**

Models with microswitch

Some sockets are available fitted with a microswitch. The microswitch is independent from the electrical contacts of the socket. The introduction of the plug into the socket activates the microswitch (the drawings below are of corresponds to the sockets without the plug).

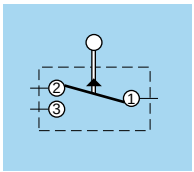

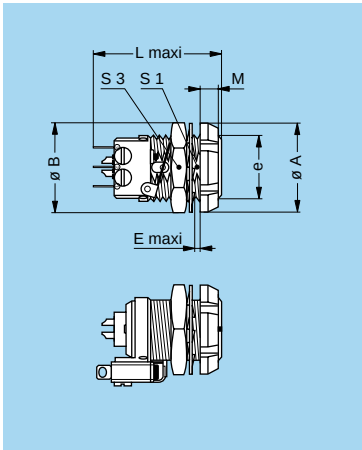

EMD Fixed socket with two nuts and microswitch
(back panel mounting)

Reference		Dimensions (mm)							
Model	Series	A	B	e	E	L	M	S1	S3
EMD	2S	20	19.5	M15x1.0	2.2	26.7	3.5	13.5	17

Panel cut-out: **P1**

Note: only exists in 10-contact version (type 310).
For the microswitch: maximum operating voltage: 250Veff/Vdc
rated current: 7A/0.25A

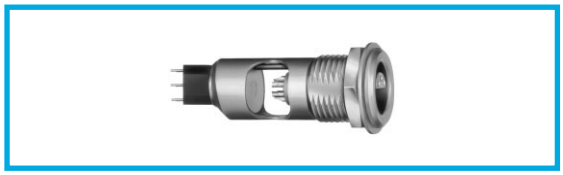

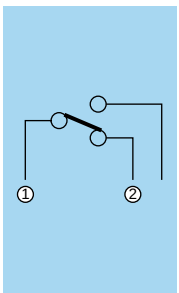

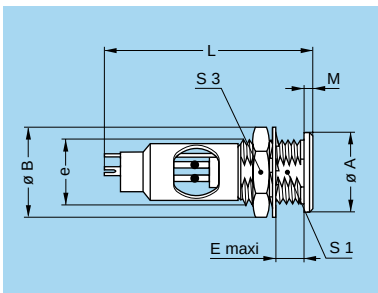

ERM Fixed socket, nut fixing with microswitch

Reference		Dimensions (mm)							
Model	Series	A	B	e	E	L	M	S1	S3
ERM	1S	14	16	M12x1.0	7.5	38	1.5	10.5	14

Panel cut-out: **P1**

Note: only exists in 2 or 5-contact versions (type 302, 305).
For the microswitch: maximum operating voltage: 270Veff/Vdc
rated current: 8.5A/0.5A

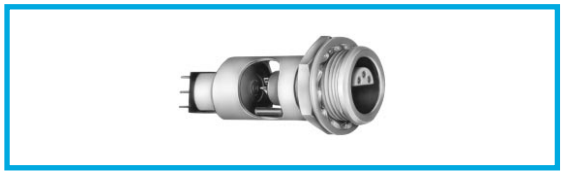

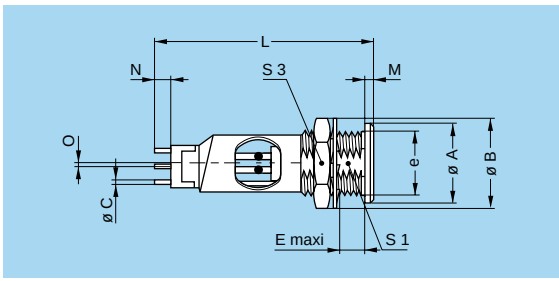

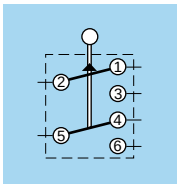

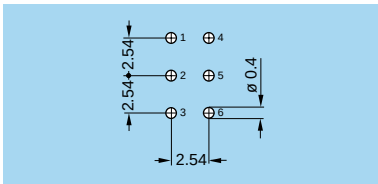

ERZ Fixed socket, nut fixing with double microswitch and print contacts

Reference		Dimensions (mm)										
Model	Series	A	B	C	e	E	L	M	N	O	S1	S3
ERZ	1S	14	16	0.4	M12x1.0	7.5	39	1.5	2.7	0.9	10.5	14

Panel cut-out: **P1**

Note: only exists in 3 or 6-contact versions (type 303, 306).
For the microswitch: maximum operating voltage: 28 Veff
rated current: 0.1 A

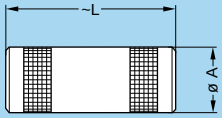

RMA Free coupler

Reference		Dim. (mm)	
Model	Series	A	L
RMA	00	6.4	22.0
RMA	0S	8.9	25.0
RMA	1S	11.9	28.5
RMA	2S	14.8	31.5
RMA	3S	17.8	38.5
RMA	4S	24.8	46.5
RMA	5S	34.7	60.5

Note: see page 112 for the available plug and contact configurations and in order to ensure correct contact alignment.

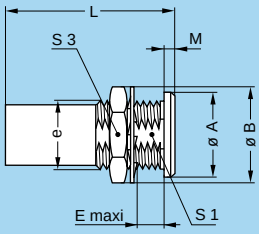

Note: see page 112 for the available plug and contact configurations and in order to ensure correct contact alignment.

RAD Fixed coupler, nut fixing

Reference		Dimensions (mm)							
Model	Series	A	B	e	E	L	M	S1	S2
RAD	00	8	10.3	M7x0.5	5.5	22.0	1.0	6.3	9
RAD	0S	10	12.5	M9x0.6	7.0	25.0	1.2	8.2	11
RAD	1S	14	16.0	M12x1.0	7.5	28.5	1.5	10.5	14
RAD	2S	18	19.5	M15x1.0	8.5	31.5	1.8	13.5	17
RAD	3S	22	25.2	M18x1.0	11.5	38.5	2.0	16.5	22
RAD	4S	28	32.0	M25x1.0	12.0	46.5	2.5	–	30
RAD	5S	40	40.0	M35x1.0	15.5	60.5	3.0	–	–

Panel cut-out: **P1**

Panel cut-out: **P2** 4S and 5S series

Note: the 5S series is delivered with a tapered washer and a round nut.

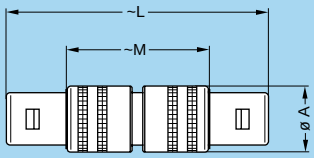

FEF Straight coupler with two plugs and front seal

Reference		Dimensions (mm)		
Model	Series	A	L	M
FEF	5S	39	130	80

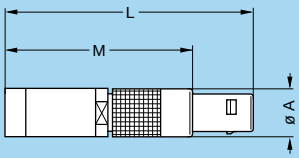

FRT Straight plug with resistor

Reference		Dimensions (mm)			Resistor
Model	Series	A	L	M	
FRT	00	6.4	33	25	50 Ω 1/8 W

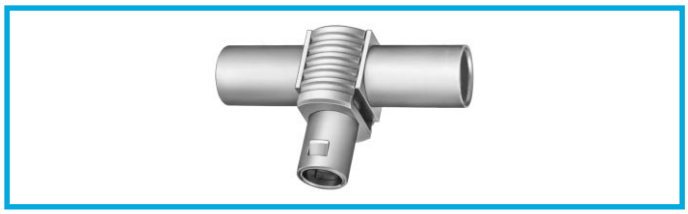

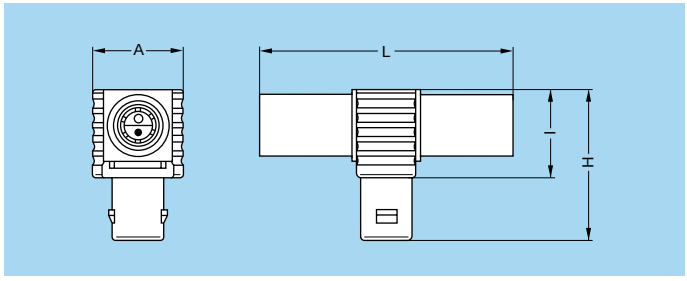

FTA T-plug with two in line sockets

Reference		Dimensions (mm)			
Model	Series	A	H	I	L
FTA	00	9	17.5	9.5	30
FTA	0S	13	23.0	13.0	38
FTA	1S	16	26.5	16.5	45
FTA	3S	21	38.5	23.5	64

Note: multipole version available only with 2 contacts (type 302).

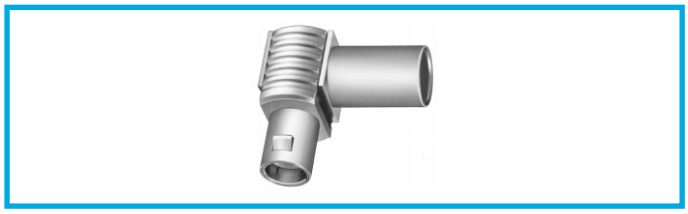

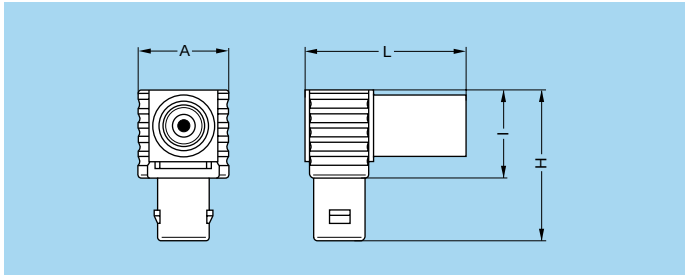

FTR Elbow (90°) plug with socket

Reference		Dimensions (mm)			
Model	Series	A	H	I	L
FTR	00	9	17.5	9.5	18.5
FTR	3S	21	38.5	23.5	41.5
FTR	4S	28	49.0	31.0	54.0

Note: available only in unipole version.

Plastic housing models

FFA, FFP, FFL and ERN plug and socket models are also available with the outer shell and the collet nut made from various insulating materials.
These connectors are particularly recommended for all applications requiring maximum electrical insulation when mated, such as medical applications. The design, including a latch sleeve and a metal earthing crown, guarantees EMC screening efficiency to meet most requirements.

Technical Characteristics

Mechanical and Climatical

Characteristics	Value				Standard
	PEEK	POM	PSU	PPSU	
Colour	natural (beige)	black	white or grey	cream	–
Endurance	> 5000 cycles	> 5000 cycles	> 5000 cycles	> 5000 cycles	IEC 60512-5 test 9a
Humidity	up to 95% at 60° C				–
Temperature range	- 50° C/+250° C	- 50° C/+115° C	- 50° C/+150° C	- 50° C/+180° C	–
Sterilization resistance 1)	> 200 cycles	none	~20 cycles	> 100 cycles	IEC 60601-1 § 44.7
Resistance to organic solvents	very good	very good	limited	good	–

Note:
1) Steam sterilization

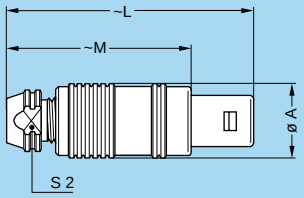

FFA **Straight plug, cable collet, PEEK or POM outer shell**

FFP **Straight plug, cable collet, PEEK or POM outer shell and inner anti-rotating device**

Reference		Dimensions (mm)			
Model	Series	A	L	M	S2
FFA	00	7.0	33.5	25.5	6.0
FFP	0S	9.5	34.5	24.5	8.0
FFP	1S	12.0	42.5	31.5	10.0
FFP	2S	15.0	52.0	40.0	12.0
FFP	3S	18.0	61.0	46.0	14.0

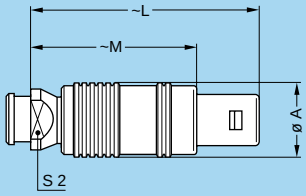

FFP **Straight plug, cable collet, PEEK or POM outer shell, inner anti-rotating device and nut for fitting a bend relief**

Reference		Dimensions (mm)			
Model	Series	A	L	M	S2
FFP	0S	9.5	33.5	23.5	7.0
FFP	1S	12.0	41.5	30.5	10.0
FFP	2S	15.0	51.0	39.0	12.0
FFP	3S	18.0	61.0	46.0	14.0

Note: the bend relief must be ordered separately (see page 175).

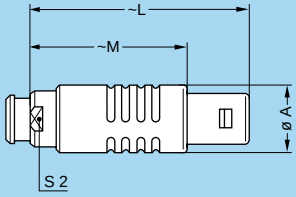

FFL **Straight plug, cable collet, with PSU and PPSU outer shell, inner anti-rotating device and nut for fitting a bend relief**

Reference		Dimensions (mm)			
Model	Series	A	L	M	S2
FFL	2S	16.5	51.5	39.5	13

Note: the bend relief must be ordered separately (see page 175).
This model is fitted with a «D or M» type collet system (see page 206).
It is also adapted for crimp contacts.

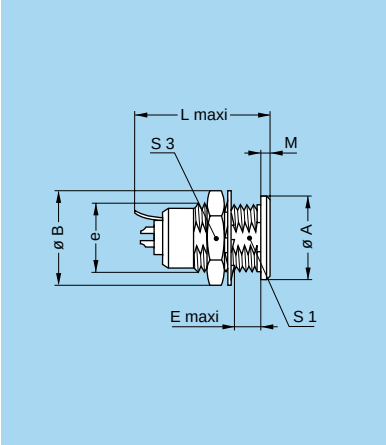

ERN Fixed socket, nut fixing, with earthing tag, PEEK or POM outer shell

Reference		Dimensions (mm)								
Model	Series	A	B	e	E	L	L[1]	M	S1	S3
ERN	00	9	10.3	M7x0.5	5.5	–	15.1	1.0	6.3	9
ERN	0S	11	12.5	M9x0.6	7.0	19.3	19.3	1.2	8.2	11
ERN	1S	14	16.0	M12x1.0	7.5	23.0	23.0	1.5	10.5	14
ERN	2S	18	19.5	M15x1.0	8.5	26.3	26.3	2.0	13.5	17
ERN	3S	22	25.2	M18x1.0	11.5	29.8	30.0	2.0	16.5	22

Panel cut-out: **P1**

Note: [1] unipole model

Watertight or vacuumtight models

HGP, HGW, EWB, HCP, SWH socket or coupler models allow the device on which they are fitted to reach a protection index of IP68 as per IEC 60529.
They are fully compatible with plugs of the same series and are widely used for portable radios, military, laboratory equipment, aviation, etc.
These models are identified by a letter «P» at the end of the reference.
Most of these models are also available in a vacuumtight version. Such models are identified by an additional letter «V» at the end of the part number (certificate on request).
Epoxy resin is used to seal these models.
Please refer to page 8 to locate the chapter on selecting watertight connectors.

Part number example:
Watertight socket: HGP.1S.304.CLLP
Vacuumtight socket: HGP.1S.304.CLLPV

Technical Characteristics

Mechanical and Climatical

Characteristics		Value	Standard
Endurance		> 5000 cycles	IEC 60512-5 test 9a
Humidity		up to 95% at 60° C	
Temperature range		- 20° C/+80° C	
Salt spray corrosion test		> 144h	IEC 60512-6 test 11f
Protection index (mated)		IP 68	IEC 60529
Climatical category		20/80/21	IEC 60068-1
Leakage rate (He)[1]		$< 10^{-6}$ mbar.l.s^{-1}	IEC 60512-7 test 14b
Maximum operating pressure[2]	0S	60 bars	IEC 60512-7 test 14d
	1S	60 bars	
	2S	40 bars	
	3S	30 bars	
	4S	15 bars	
	5S	5 bars	
	6S	5 bars	

Note:
[1] only for vacuumtight models.
[2] this value corresponds to the maximum allowed pressure difference for the assembled socket.

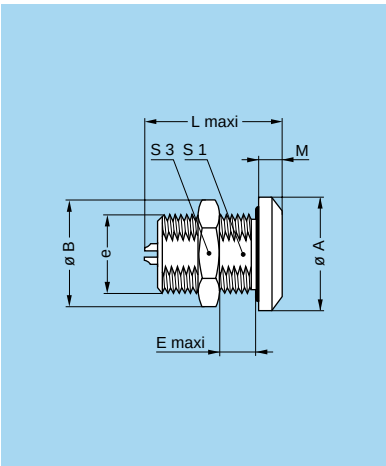

HGP Fixed socket, nut fixing, watertight or vacuumtight

Reference		Dimensions (mm)								
Model	Series	A	B	e	E	L	L[1]	M	S1	S3
HGP	0S	18	16.0	M12x1.0	11.5	22.0	20.5	4.0	10.5	14
HGP	1S	20	19.5	M14x1.0	15.5	25.5	25.5	4.0	12.5	17
HGP	2S	20	21.8	M16x1.0	17.0	28.0	28.0	4.0	14.5	19
HGP	3S	28	27.5	M20x1.0	19.0	35.5	34.5	6.0	18.5	24
HGP	4S	34	32.0	M25x1.0	22.5	41.0	42.0	6.5	23.5	30
HGP	5S	45	40.0	M35x1.0	28.0	54.5	78.5	7.5	33.5	–
HGP	6S	58	54.0	M48x1.5	20.0	57.0	–	6.0	45.5	–

Panel cut-out: **P3**

Note: [1] unipole model

Note: the 5S and 6S series are delivered with a round nut.

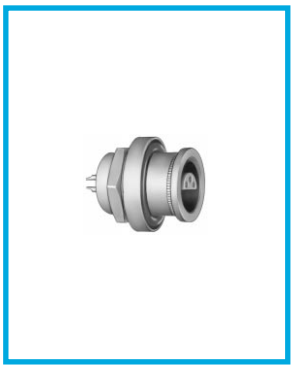

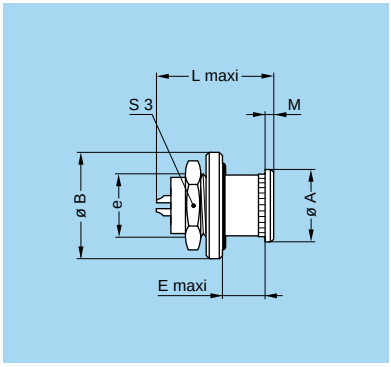

HGW Fixed socket, nut fixing, with back washer, watertight or vacuumtight

Reference		Dimensions (mm)						
Model	Series	A	B	e	E	L	M	S3
HGW	0S	10	15	M9x0.6	2	17.5	1.2	11
HGW	1S	14	18	M12x1.0	4	20.2	1.5	14

Panel cut-out: **P11**

Note: vacuumtight version is only available in the 0S series.

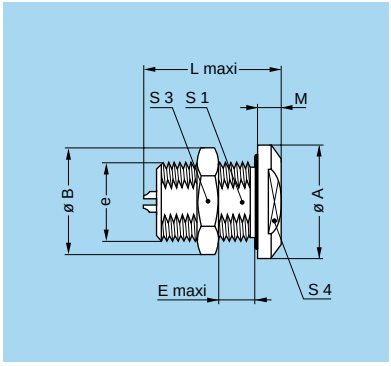

EWB Fixed socket, nut fixing, with two flats on the flange, watertight or vacuumtight

Reference		Dimensions (mm)									
Model	Series	A	B	e	E	L	L[1)]	M	S1	S3	S4
EWB	0S	18	16.0	M12x1.0	11.5	22.0	–	4.0	10.5	14	14
EWB	1S	20	19.5	M14x1.0	17.0	25.5	25.5	4.0	12.5	17	16
EWB	2S	20	21.8	M16x1.0	19.0	28.0	26.5	4.0	14.5	19	16
EWB	4S	34	32.0	M25x1.0	22.5	41.0	–	6.5	23.5	30	27

Panel cut-out: **P3**

Note: [1)] unipole model

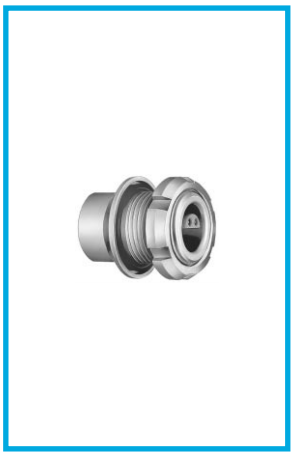

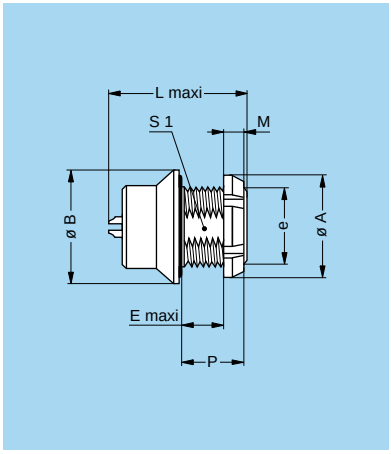

HCP Fixed socket, nut fixing, watertight or vacuumtight (back panel mounting)

Reference		Dimensions (mm)							
Model	Series	A	B	e	E	L	M	P	S1
HCP	1S	18	20	M14x1.0	8.6	25.5	3.5	12.0	–
HCP	2S	20	20	M16x1.0	12.5	29.0	3.5	16.5	14.5
HCP	4S	27	34	M25x1.0	15.5	41.0	4.5	20.0	23.5

Panel cut-out: **P3**

Note: the 4S series is delivered with a conical nut.

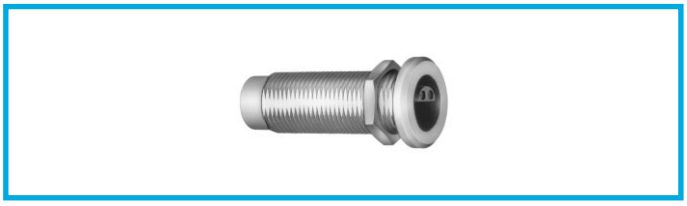

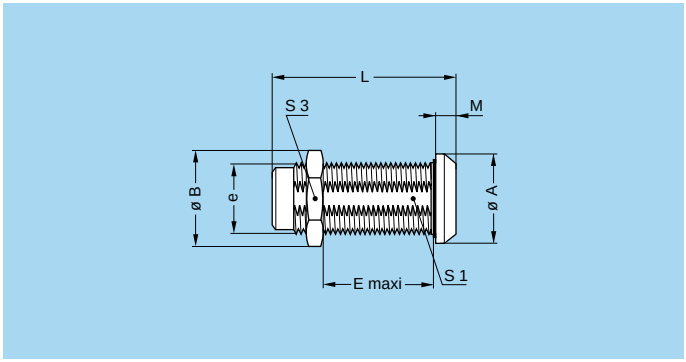

SWH Fixed coupler, nut fixing, watertight or vacuumtight

Reference		Dimensions (mm)							
Model	Series	A	B	e	E	L	M	S1	S3
SWH	0S	14	13.8	M10x0.75	17	34	2.0	9.0	12
SWH	1S	17	16.0	M12x1.00	28	39	2.5	10.5	14
SWH	2S	20	21.8	M16x1.00	25	44	4.0	15.0	19
SWH	3S	25	27.0	M20x1.00	30	53	4.0	18.5	24
SWH	4S	34	32.0	M25x1.00	50	65	4.0	23.5	30
SWH	5S	45	40.0	M35x1.00	58	80	5.0	33.5	–
SWH	6S	58	54.0	M48x1.50	55	81	6.0	45.5	–

Panel cut-out: **P4**

Note: see page 112 for the available plug and contact configurations and in order to ensure correct contact alignment.
The 5S and 6S series are delivered with a round nut.

E Series

E series connectors have been specifically designed for outdoor applications.
They include an inner sleeve and two seals to prevent penetration of solids or liquids into the housing formed by the plug, free socket, fixed socket or coupler. All models of these series are watertight when mated and give a protection index of IP 68 as per IEC 60529 standard (in mated condition) when correctly assembled to an appropriate cable (IP 66 otherwise).
– security of the Push-Pull latching system
– watertight connection (IP 68/IP 66)
– unipole types transmitting current up to 230 A and multipole types with up to 106 contacts
– solder or print contacts (straight or elbow)
– polarization by stepped insert (half-moon) fitted with male and female contacts
– wide range of models satisfying most applications
– 360° screening for full EMC shielding
– rugged housing for extreme working condition.

Interconnections

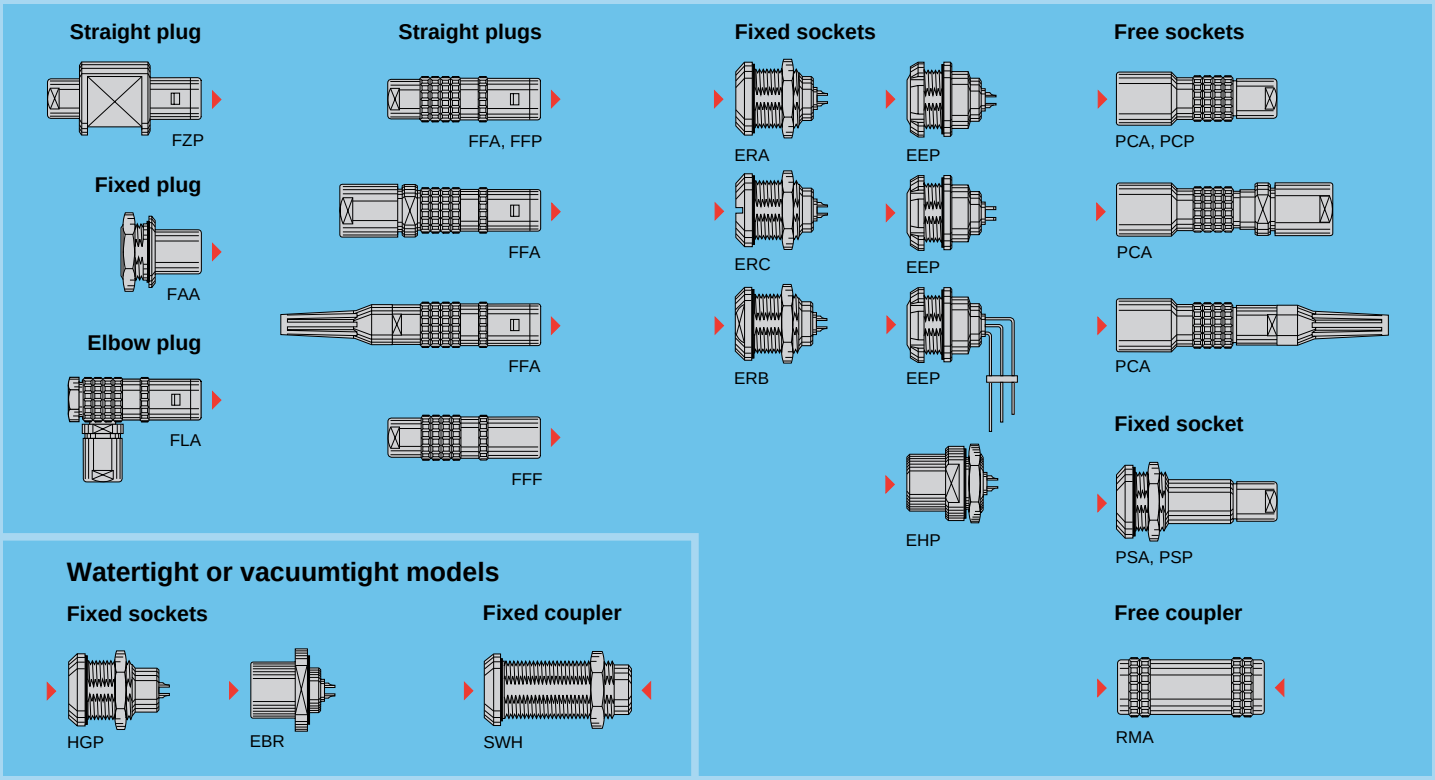

Model Description

EBR Fixed socket with round flange, watertight, protruding shell and screw fixing
EEP Fixed socket, nut fixing (back panel mounting)
EEP Fixed socket, nut fixing, with elbow (90°) contacts for printed circuit (back panel mounting)
EEP Fixed socket, nut fixing, with straight contacts for printed circuit (back panel mounting)
EHP Fixed socket, nut fixing, protruding shell
ERA Fixed socket, nut fixing
ERB Fixed socket, nut fixing with two flats in the flange
ERC Fixed socket, nut fixing with slot in the flange
FAA Fixed plug non-latching, nut fixing
FFA Straight plug, cable collet
FFA Straight plug with oversize cable collet
FFA Straight plug, cable collet and nut for fitting a bend relief
FFF Straight plug non-latching, cable collet
FFP Straight plug, cable collet and inner anti-rotating device
FLA Elbow (90°) plug, cable collet
FZP Straight plug for remote handling, cable collet and inner anti-rotating device
HGP Fixed socket, nut fixing, watertight or vacuumtight
PCA Free socket, cable collet
PCA Free socket with oversize cable collet
PCA Free socket, cable collet and nut for fitting a bend relief
PCP Free socket, cable collet and inner anti-rotating device
PSA Fixed socket, nut fixing, cable collet
PSP Fixed socket, nut fixing, cable and inner anti-rotating device
RMA Free coupler
SWH Fixed coupler, nut fixing, watertight or vacuumtight

Part Section Showing Internal Components

Fixed socket

1. outer shell
2. earthing crown
3. retaining ring
4. hexagonal nut
5. insulator
6. male contact
7. female contact
8. O-ring

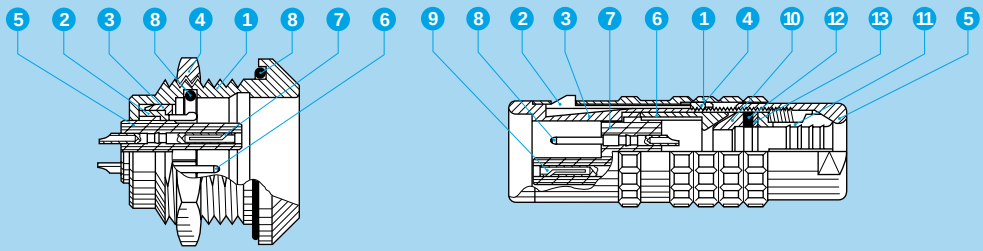

Straight plug

1. outer shell
2. latch sleeve
3. inner shell
4. retaining ring
5. collet nut
6. centre-piece
7. insulator
8. male contact
9. female contact
10. earthing cone
11. collet
12. gasket
13. washer

Technical Characteristics

Mechanical and Climatical

Characteristics	Value	Standard
Endurance	> 5000 cycles	IEC 60512-5 test 9a
Humidity	up to 95% at 60° C	
Temperature range[1) 2)]	- 50° C, +200° C	
Resistance to vibrations	10-2000 Hz, 15 g	IEC 60512-4 test 6d
Shock resistance	100 g, 6 ms	IEC 60512-4 test 6c
Salt spray corrosion test	> 144h	IEC 60512-6 test 11f
Protection index (mated)	IP 68/IP 66	IEC 60529
Climatical category[1)]	50/175/21	IEC 60068-1

Electrical

Characteristics		Value	Standard
Shielding efficiency	at 10 MHz	> 95 dB	IEC 60169-1-3
	at 1 GHz	> 80 dB	IEC 60169-1-3

Note: the various tests have been carried out with FFA and ERA connector pairs, with chrome-plated brass shell, PEEK insulator and silicone O-ring. Detailed electrical characteristics, as well as materials and treatment are presented in the chapter Technical Characteristics on page 197.
1) for watertight or vacuumtight models see page 100.
2) minimum operating temperature is -20°C for sockets fitted with an FPM (Viton) O-ring.

Available Models (series and types)

Model	Unipole						Multipole						
	0E	1E	2E	3E	4E	5E	0E	1E	2E	3E	4E	5E	6E
EBR			●						●				
EEP	●	●	●	●			●	●	●	●			
EEP [1)]									●				
EGG [5)]													●
EHP	●	●	●				●	●	●				
ERA	●	●	●	●	●	●	●	●	●	●	●	●	
ERB	●	●	●	●			●	●	●	●			
ERC	●			●	●		●			●	●		
FAA	●	●	●	●			●	●	●	●			
FFA	●	●	●	●	●	●	●	●	●	●	●	●	
FFA [2)]		●	●	●	●			●	●	●	●		
FFA [3)]	●	●	●	●	●		●	●	●	●	●		
FFF	●	●					●	●					
FFP				●	●					●	●		

Model	Unipole						Multipole						
	0E	1E	2E	3E	4E	5E	0E	1E	2E	3E	4E	5E	6E
FGG [5)]													●
FLA							●	●	●	●	●		
FZP		●	●	●	●	●		●	●	●	●	●	
HGP [4)]	●	●		●	●	●	●	●	●	●	●	●	●
PCA	●	●	●	●	●	●	●	●	●	●	●	●	
PCA [2)]		●	●	●	●			●	●	●	●		
PCA [3)]	●	●	●	●	●		●	●	●	●	●		
PCP				●	●					●	●		
PHG [5)]													●
PKG [5)]													●
PSA	●	●	●	●	●	●	●	●	●	●	●	●	
PSP				●	●	●				●	●	●	
RMA	●	●	●	●	●	●	●	●	●	●	●	●	
SWH [4)]	●	●	●	●	●	●	●	●	●	●	●	●	●

Note:
RMA and SWH models are not available in all types.
Please consult pages corresponding to the models.
1) with elbow (90°) print contacts
2) with oversize cable collet
3) with cable collet and nut for fitting a bend relief
4) with key (6E series)
5) with key (G)
● = available models by series and types

Part Number Example

Straight plug with cable collet

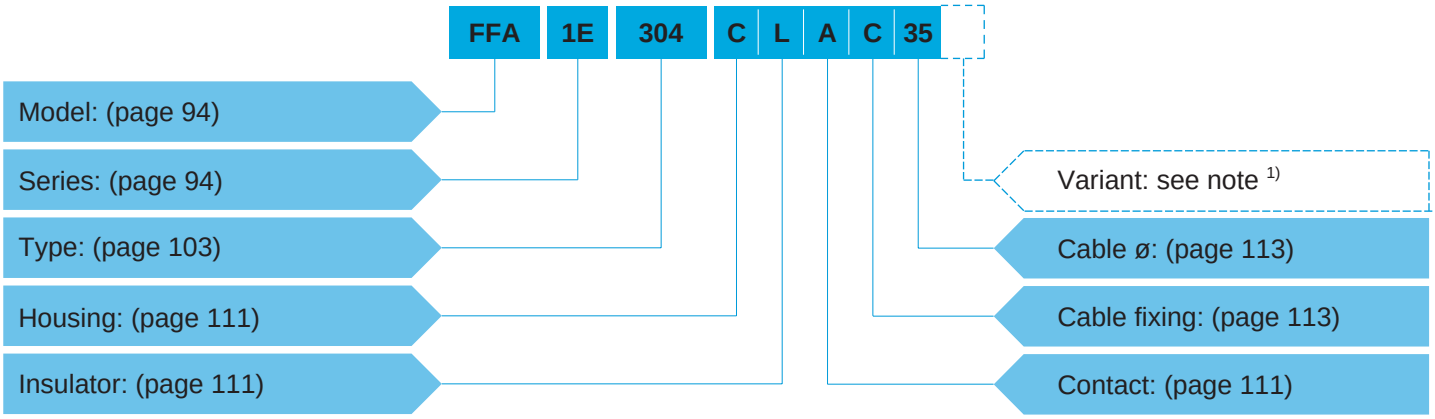

FFA.1E.304.CLAC35 = straight plug with cable collet, 1E series, multipole type with 4 contacts, chrome-plated brass shell and PEEK insulator, male solder contacts, C type collet for a 3.5 mm diameter cable.

Fixed socket

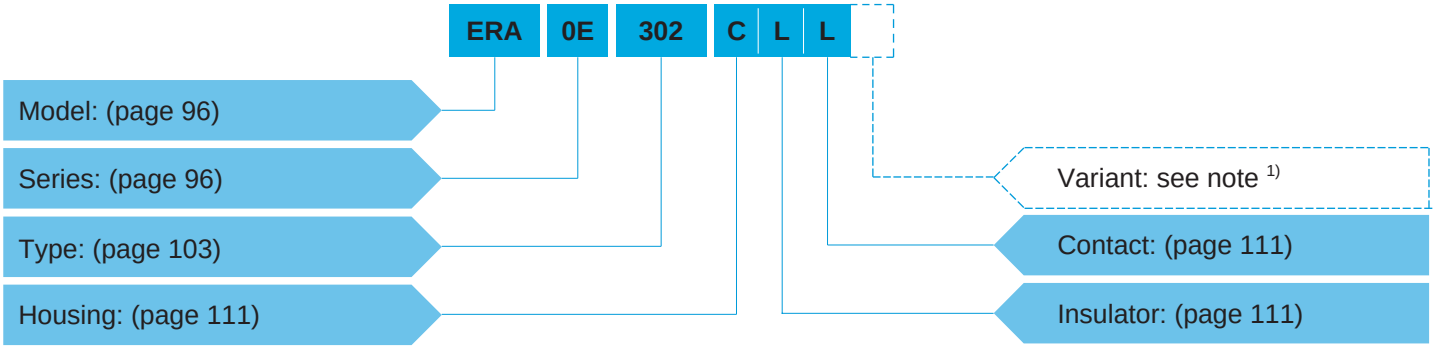

ERA.0E.302.CLL = fixed socket, nut fixing, 0E series, multipole type with 2 contacts, chrome-plated outer shell, PEEK insulator, female solder contacts.

Straight coupler

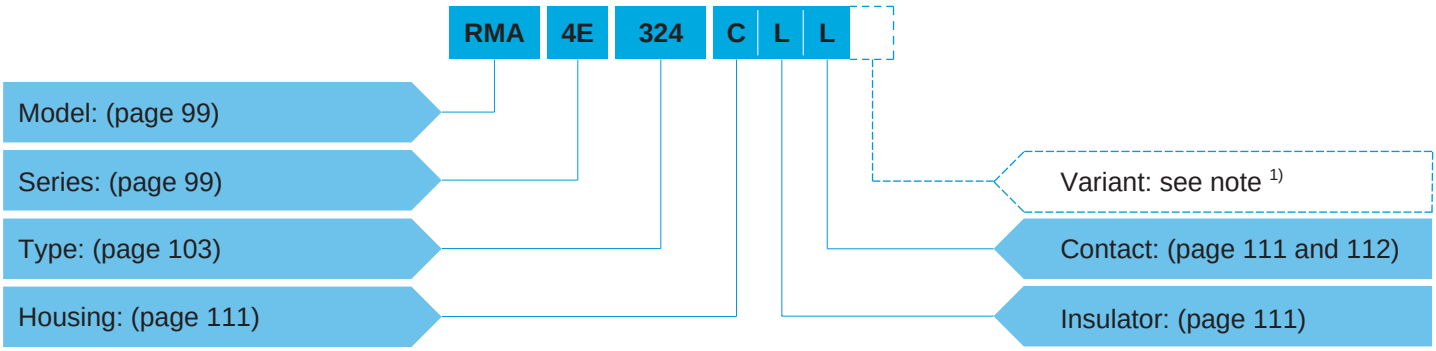

RMA.4E.324.CLL = straight coupler, 4E series, multipole type with 24 contacts, chrome-plated brass outer shell, PEEK insulator, 12 female and 12 male contacts each end.

Note: 1) the «Variant» position of the part number is used to specify either the presence of a nut for fitting a bend relief, or the anodized colour of the aluminium housings.
For models with collet nut for fitting a bend relief, a «Z» should be indicated and a bend relief can be ordered separately as indicated in the «Accessories» section. An order for a connector with bend relief should thus include two part numbers.
For the various housings available in colours, the corresponding letter in the part number for the colour is indicated on page 124.
For the watertight models of socket, the letter «P» is used; for the vacuumtight models of socket the letters «PV» shall be indicated.
For the plug and socket that should be fitted with an FPM (Viton) O-ring the letter «H» shall be indicated.

Models - Series

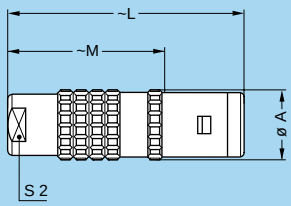

FFA Straight plug, cable collet

Reference		Dimensions (mm)			
Model	Series	A	L	M	S2
FFA	0E	11	34	23.0	8
FFA	1E	13	42	28.0	9
FFA	2E	16	52	36.0	12
FFA	3E	19	61	41.0	15
FFA	4E	25	71	50.5	19
FFA	5E	38	92	67.0	32
FGG[1)]	6E	47	118	89.0	38

Note: 1) with key (G)

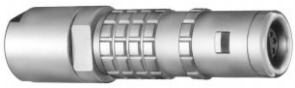

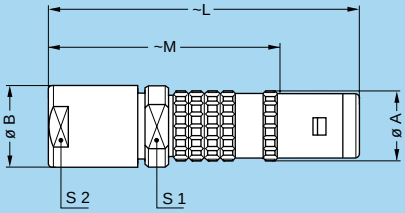

FFA Straight plug with oversize cable collet

Reference		Dimensions (mm)					
Model	Series	A	B	L	M	S1	S2
FFA	1E	13	14.5	55	41	12	12
FFA	2E	16	17.0	65	49	15	15
FFA	3E	19	22.0	80	60	19	19
FFA	4E	25	36.0	105	84	30	32

Note: the fitting of oversize collets onto this model allows them to be fitted to the cables that can be accommodated by the next housing size up.

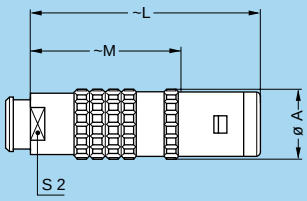

FFA Straight plug, cable collet and nut for fitting a bend relief

Reference		Dimensions (mm)			
Model	Series	A	L	M	S2
FFA	0E	11	34	23.0	7
FFA	1E	13	42	28.0	9
FFA	2E	16	52	36.0	12
FFA	3E	19	60	40.0	15
FFA	4E	25	71	50.5	19

Note: the bend relief must be ordered separately (see page 175).

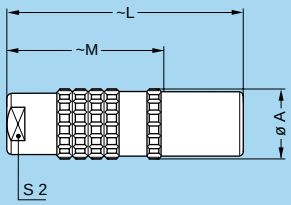

FFF Straight plug non-latching, cable collet

Reference		Dimensions (mm)			
Model	Series	A	L	M	S2
FFF	0E	11	34	23	8
FFF	1E	13	42	28	9

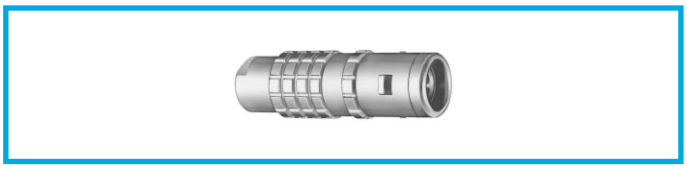

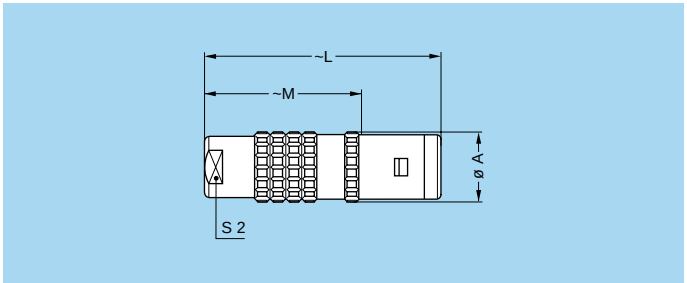

FFP Straight plug, cable collet and inner anti-rotating device

Reference		Dimensions (mm)			
Model	Series	A	L	M	S2
FFP	3E	19	61	41.0	15
FFP	4E	25	71	50.5	19

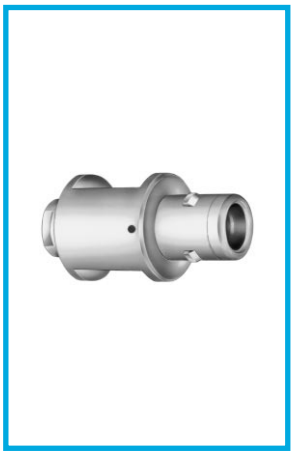

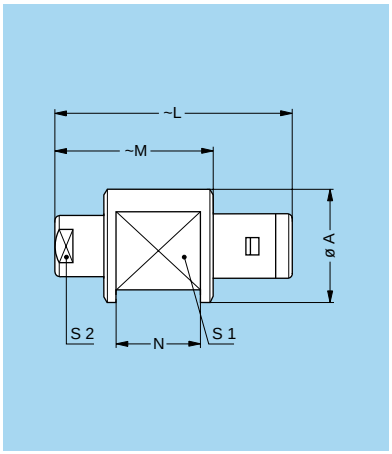

FZP Straight plug for remote handling, cable collet and inner anti-rotating device

Reference		Dimensions (mm)					
Model	Series	A	L	M	N	S1	S2
FZP	1E	20	42	28.0	15.0	15	9
FZP	2E	22	52	36.0	16.0	16	12
FZP	3E	23	61	41.0	20.0	19	15
FZP	4E	32	71	50.5	29.0	25	19
FZP	5E	44	92	67.0	39.5	36	32

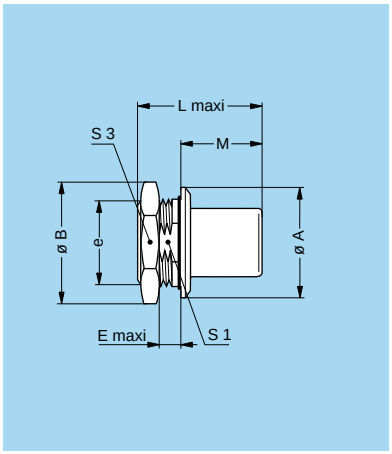

FAA Fixed plug non-latching, nut fixing

Reference		Dimensions (mm)								
Model	Series	A	B	e	E	L	L[1)]	M	S1	S3
FAA	0E	18	19.5	M14x1.0	3.5	19.5	19.5	13.0	12.5	17
FAA	1E	20	21.5	M16x1.0	3.5	23.0	23.0	16.0	14.5	19
FAA	2E	25	27.5	M20x1.0	4.0	27.0	27.0	18.0	18.5	24
FAA	3E	31	34.5	M24x1.0	4.5	32.5	32.5	22.5	22.5	30

Panel cut-out: **P1**

Note: [1)] unipole model

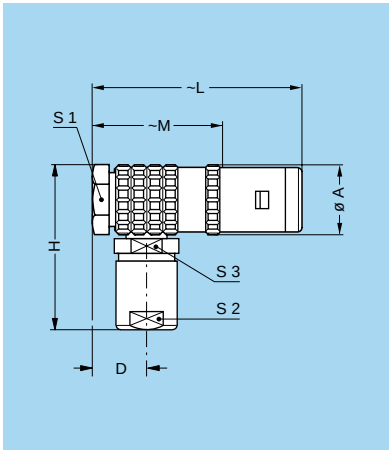

FLA Elbow (90°) plug, cable collet

Reference		Dimensions (mm)							
Model	Series	A	D	H	L	M	S1	S2	S3
FLA	0E	11.5	7.6	27	36	25.0	10	8	8
FLA	1E	14.0	8.8	33	43	29.0	12	9	10
FLA	2E	17.5	10.5	40	51	35.0	15	12	13
FLA	3E	21.0	11.5	47	60	40.0	18	15	15
FLA	4E	27.5	15.5	57	72	51.5	24	19	20

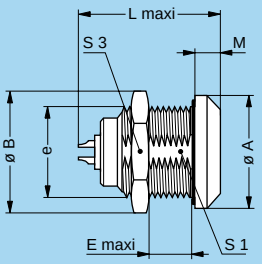

ERA Fixed socket, nut fixing

Reference		Dimensions (mm)								
Model	Series	A	B	e	E	L	L[1)]	M	S1	S3
ERA	0E	18	19.5	M14x1.0	7.0	19.5	20.5	4.0	12.5	17
ERA	1E	20	21.5	M16x1.0	9.0	24.0	25.3	4.5	14.5	19
ERA	2E	25	27.5	M20x1.0	9.0	28.5	30.0	5.0	18.5	24
ERA	3E	31	34.5	M24x1.0	11.0	34.0	35.0	6.0	22.5	30
ERA	4E	37	41.5	M30x1.0	9.0	36.0	38.0	6.5	28.5	36
ERA	5E	55	54.0	M45x1.5	10.0	44.5	78.0	9.0	42.5	–
EGG[2)]	6E	65	65.0	M55x2.0	10.5	48.5	–	10.0	52.0	–

Panel cut-out: **P1**

Note: [1)] unipole model

Note: [2)] with key (G). The 5E and 6E series are delivered with a round nut.

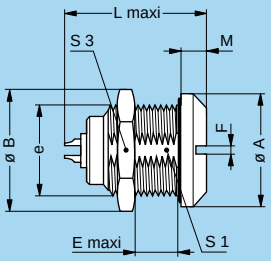

ERC Fixed socket, nut fixing with slot in the flange

Reference		Dimensions (mm)									
Model	Series	A	B	e	E	F	L	L[1)]	M	S1	S3
ERC	0E	18	19.5	M14x1.0	7	1.5	19.5	20.5	4.0	12.5	17
ERC	3E	31	34.5	M24x1.0	11	3.0	34.0	35.0	6.0	22.5	30
ERC	4E	37	41.5	M30x1.0	9	3.0	36.0	38.0	6.5	28.5	36

Panel cut-out: **P1**

Note: [1)] unipole model

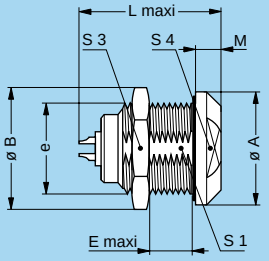

ERB Fixed socket, nut fixing with two flats in the flange

Reference		Dimensions (mm)									
Model	Series	A	B	e	E	L	L[1)]	M	S1	S3	S4
ERB	0E	18	19.5	M14x1.0	7	19.5	20.5	4.0	12.5	17	14
ERB	1E	20	21.5	M16x1.0	9	24.0	25.3	4.5	14.5	19	17
ERB	2E	25	27.5	M20x1.0	9	28.5	30.0	5.0	18.5	24	20
ERB	3E	31	34.5	M24x1.0	11	34.0	35.0	6.0	22.5	30	24

Panel cut-out: **P1**

Note: [1)] unipole model

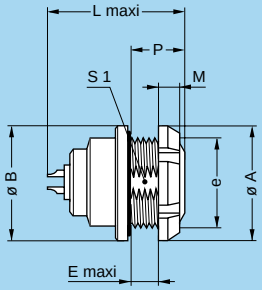

EEP Fixed socket, nut fixing (back panel mounting)

Reference		Dimensions (mm)								
Model	Series	A	B	e	E	L	L[1)]	M	P	S1
EEP	0E	18	18	M14x1.0	3.4	19.5	20.5	3.5	7	12.5
EEP	1E	20	20	M16x1.0	6.2	24.0	25.3	3.5	10	14.5
EEP	2E	25	25	M20x1.0	5.0	28.5	30.0	3.5	10	18.5
EEP	3E	30	31	M24x1.0	7.0	34.0	35.0	4.5	12	22.5

Panel cut-out: **P1**

Note: [1)] unipole model

Note: the 3E series is delivered with a conical nut.

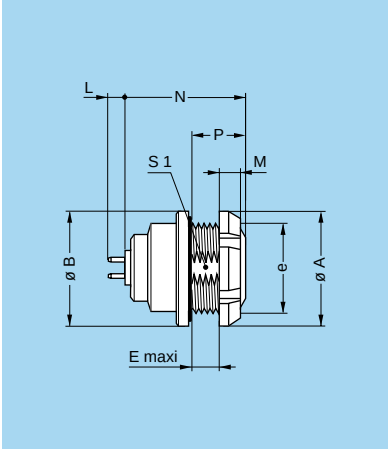

EEP Fixed socket, nut fixing, with straight contact for printed circuit (back panel mounting)

Reference		Dimensions (mm)							
Model	Series	A	B	e	E	M	N	P	S1
EEP	0E	18	18	M14x1.0	3.4	3.5	18.4	7	12.5
EEP	1E	20	20	M16x1.0	6.2	3.5	23.5	10	14.5
EEP	2E	25	25	M20x1.0	5.0	3.5	25.5	10	18.5
EEP	3E	30	31	M24x1.0	7.0	4.5	30.5	12	22.5

Panel cut-out: **P1** PCB drilling pattern: **P21**

Note: this contact type is available for all E●● socket models.
See page 195 for table of available types.
Length «L» depends on the number of contacts, see PCB drilling pattern on page 195. The 3E series is delivered with a conical nut.

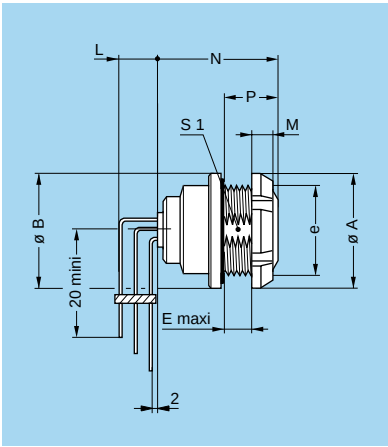

EEP Fixed socket, nut fixing, with elbow (90°) contacts for printed circuit (back panel mounting)

Reference		Dimensions (mm)							
Model	Series	A	B	e	E	M	N	P	S1
EEP	2E	25	25	M20x1.0	5	3.5	24.5	10	18.5

Panel cut-out: **P1** PCB drilling pattern: **P24**

Note: this contact type is available for all back panel mounting socket types. See page 196 for available types.
Length «L» depends on the number of contacts, see PCB drilling pattern on page 196.

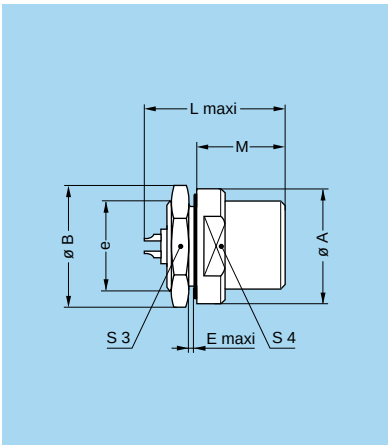

EHP Fixed socket, nut fixing, protruding shell

Reference		Dimensions (mm)								
Model	Series	A	B	e	E	L	L[1)]	M	S3	S4
EHP	0E	18	19.5	M14x1.0	1.5	19.5	20.5	10.5	17	15
EHP	1E	20	21.5	M16x1.0	1.5	24.0	25.3	15.5	19	17
EHP	2E	25	27.5	M20x1.0	2.0	28.5	30.0	17.0	24	20

Panel cut-out: **P1**

Note: [1)] unipole model

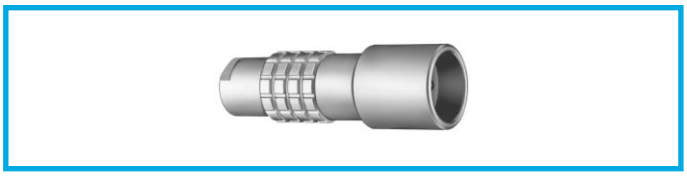

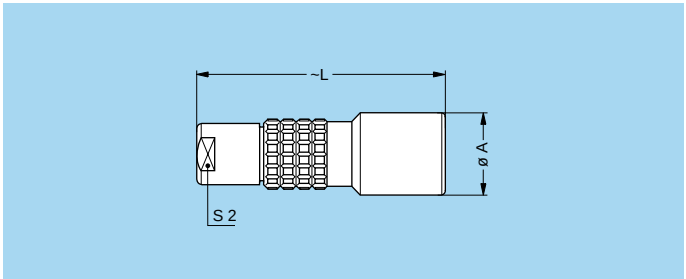

PCA Free socket, cable collet

Reference		Dimensions (mm)		
Model	Series	A	L	S2
PCA	0E	13	34.0	8
PCA	1E	15	45.0	9
PCA	2E	19	54.0	12
PCA	3E	23	65.0	15
PCA	4E	29	75.5	19
PCA	5E	42	95.0	32
PHG[1)]	6E	52	125.0	38

Note: [1)] with key (G)

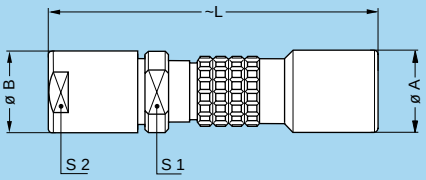

PCA Free socket with oversize cable collet

Reference		Dimensions (mm)				
Model	Series	A	B	L	S1	S2
PCA	1E	15	14.5	58.0	12	12
PCA	2E	19	17.0	67.0	15	15
PCA	3E	23	22.0	84.0	19	19
PCA	4E	29	36.0	109.0	30	32

Note: the fitting of oversize collets onto this model allows them to be fitted to the cables that can be accommodated by the next housing size up.

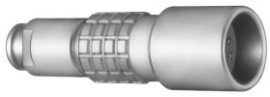

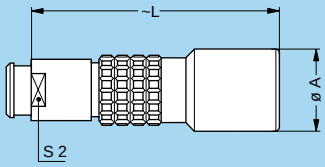

PCA Free socket, cable collet and nut for fitting a bend relief

Reference		Dimensions (mm)		
Model	Series	A	L	S2
PCA	0E	13	34.0	7
PCA	1E	15	45.0	9
PCA	2E	19	54.0	12
PCA	3E	23	64.0	15
PCA	4E	29	75.5	19

Note: the bend relief must be ordered separately (see page 175).

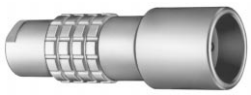

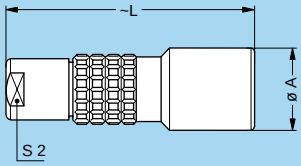

PCP Free socket, cable collet and inner anti-rotating device

Reference		Dimensions (mm)		
Model	Series	A	L	S2
PCP	3E	23	65.0	15
PCP	4E	29	75.5	19

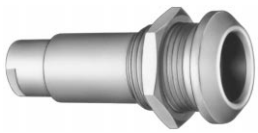

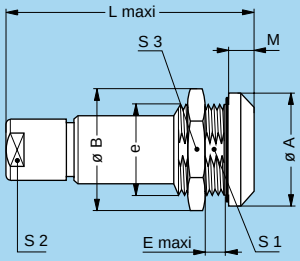

PSA Fixed socket, nut fixing, cable collet

Reference		Dimensions (mm)								
Model	Series	A	B	e	E	L	M	S1	S2	S3
PSA	0E	18	19.5	M14x1.0	7.0	34.0	4.0	12.5	8	17
PSA	1E	20	21.5	M16x1.0	9.0	45.0	4.5	14.5	9	19
PSA	2E	25	27.5	M20x1.0	9.0	54.0	5.0	18.5	12	24
PSA	3E	31	34.5	M24x1.0	11.0	65.0	6.0	22.5	15	30
PSA	4E	37	41.5	M30x1.5	9.0	75.5	6.5	28.5	19	36
PSA	5E	51	54.0	M45x1.5	10.0	95.0	9.0	–	32	54
PKG[1)]	6E	65	65.0	M55x2.0	10.5	125.0	10.0	–	38	–

Panel cut-out: **P1**

Note: [1)] with key (G).
The 5E and 6E series are delivered with a round nut.

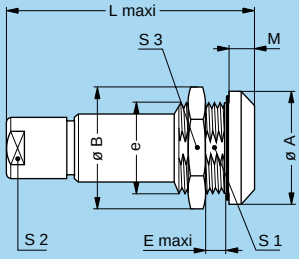

PSP Fixed socket, nut fixing, cable collet and inner anti-rotating device

Reference		Dimensions (mm)								
Model	Series	A	B	e	E	L	M	S1	S2	S3
PSP	3E	31	34.5	M24x1.0	11.0	65.0	6.0	22.5	15	30
PSP	4E	37	41.5	M30x1.5	9.0	75.5	6.5	28.5	19	36
PSP	5E	51	54.0	M45x1.5	10.0	95.0	9.0	–	32	54

Panel cut-out: **P1**

Note: the 5E and 6E series are delivered with a round nut.

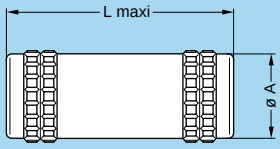

RMA Free coupler

Reference		Dim. (mm)	
Model	Series	A	L
RMA	0E	14	30
RMA	1E	16	40
RMA	2E	20	44
RMA	3E	25	54
RMA	4E	30	57
RMA	5E	44	67

Note: see page 112 for the available plug and contact configurations and in order to ensure correct contact alignment.

Watertight or vacuumtight models

HGP, EBR and SWH socket or coupler models allow the device on which they are fitted to reach a protection index of IP 68 as per IEC 60529.
They are fully compatible with plugs of the same series and are widely used for portable radios, military, laboratory equipment, aviation, etc.
These models are identified by a letter «P» at the end of the reference.
Most of these models are also available in a vacuumtight version. Such models are identified by an additional letter «V» at the end of the part number (certificate on request).
Epoxy resin is used to seal these models.
Please refer to page 8 to locate the chapter on selecting watertight connectors.

Part number example:
Watertight socket: HGP.1E.304.CLLP
Vacuumtight socket: HGP.1E.304.CLLPV

Technical Characteristics

Mechanical and Climatical

Characteristics		Value	Standard
Endurance		> 5000 cycles	IEC 60512-5 test 9a
Humidity		up to 95% at 60° C	
Temperature range		- 20° C/+80° C	
Salt spray corrosion test		> 144h	IEC 60512-6 test 11f
Protection index (mated)		IP 68	IEC 60529
Climatical category		20/80/21	IEC 60068-1
Leakage rate (He)[1]		$< 10^{-6}$ mbar.l.s^{-1}	IEC 60512-7 test 14b
Maximum operating pressure[2]	0E	60 bars	IEC 60512-7 test 14d
	1E	60 bars	
	2E	40 bars	
	3E	30 bars	
	4E	15 bars	
	5E	5 bars	
	6E	5 bars	

Note:
1) only for vacuumtight models.
2) this value corresponds to the maximum allowed pressure difference for the assembled socket.

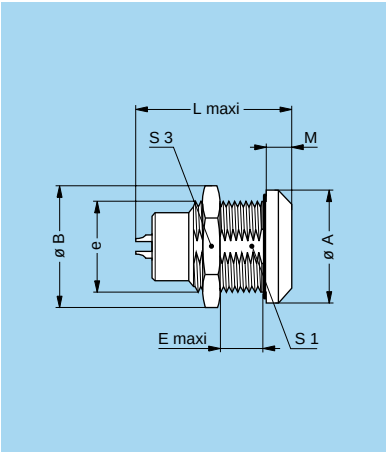

HGP Fixed socket, nut fixing, watertight or vacuumtight

Reference		Dimensions (mm)								
Model	Series	A	B	e	E	L	L[1]	M	S1	S3
HGP	0E	18	19.5	M14x1.0	7.0	23.5	22.0	4.0	12.5	17
HGP	1E	20	21.5	M16x1.0	9.0	28.0	28.0	4.5	14.5	19
HGP	2E	25	27.5	M20x1.0	10.5	32.5	28.0	5.0	18.5	24
HGP	3E	31	34.5	M24x1.0	15.5	39.5	38.5	6.0	22.5	30
HGP	4E	37	41.5	M30x1.0	17.5	43.0	44.0	6.5	28.5	36
HGP	5E	55	54.0	M45x1.5	20.0	52.0	76.0	9.0	42.5	–
HGP[1]	6E	65	65.0	M55x2.0	20.5	52.0	–	10.0	52.0	–

Panel cut-out: **P1**

Note: 1) unipole model

Note: 1) with key (G). The 5E and 6E series are delivered with a round nut.

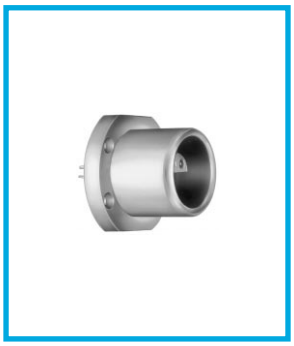

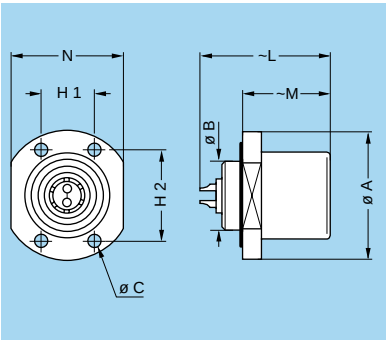

EBR Fixed socket with round flange, watertight, protruding shell and screw fixing

Reference		Dimensions (mm)								
Model	Series	A	B	C	H1	H2	L	L[1]	M	N
EBR	2E	28	19	2.8	11.8	20.4	32.5	28.0	19	15

Panel cut-out: **P6**

Note: 1) unipole model.
This model is only available in a watertight version.

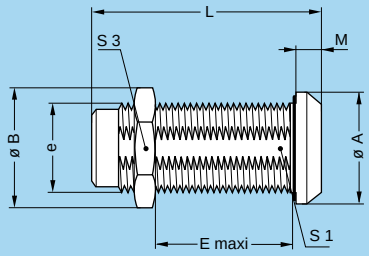

SWH Fixed coupler, nut fixing, watertight or vacuumtight

Reference		Dimensions (mm)							
Model	Series	A	B	e	E	L	M	S1	S3
SWH	0E	18	19.5	M14x1.0	21	36.0	4.0	12.5	17
SWH	1E	20	21.5	M16x1.0	29	47.0	4.5	14.5	19
SWH	2E	25	27.5	M20x1.0	28	52.5	5.0	18.5	24
SWH	3E	31	34.5	M24x1.0	33	64.0	6.0	22.5	30
SWH	4E	37	41.5	M30x1.0	43	70.0	6.5	28.5	36
SWH	5E	55	54.0	M45x1.5	45	81.0	9.0	42.5	–
SWH[1)]	6E	65	65.0	M55x2.0	12	75.0	10.0	–	–

Panel cut-out: **P1**

Note: 1) with key (G). The 5E and 6E series are delivered with a round nut. See page 112 for the available plug and contact configurations and in order to ensure correct contact alignment.

Type (S and E series)

Unipole

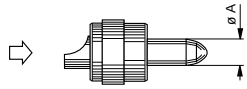

Male solder contacts

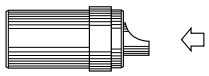

Female solder contacts

	Reference	Series: Standard	Series: Watertight	ø A (mm)	Contact type: Solder	Contact type: Crimp	Test voltage (kV rms)[1]	Test voltage (kV dc)[1]	Rated current (A)[1]
00	113	00	–	1.3	●[2]	●	0.8	1.2	8
0S 0E	116	0S	0E	1.6	●[2]	–	1.5	2.1	12
1S 1E	120	1S	1E	2.0	●[2]	–	1.8	2.7	18
	130	1S	1E	3.0	●	–	1.5	2.1	25
2S 2E	130	2S	2E	3.0	●	–	2.1	3.0	30
	140	2S	2E	4.0	●	–	1.8	2.4	40
3S 3E	140	3S	3E	4.0	●	–	2.4	3.3	43
	160	3S	3E	6.0	●	–	1.8	2.4	65
4S 4E	140	4S	–	4.0	●	–	3.0	4.2	46
	160	4S	4E	6.0	●	–	2.7	3.9	70
5S 5E	112	5S	5E	12.0	●	–	1.5	2.1	230

Note: [1] see calculation method, caution and suggested standard on page 204.
[2] also available with inversed contacts: plug = female, socket = male.

Multipole

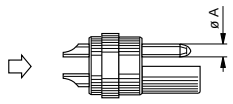

Male solder contacts

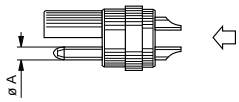

Female solder contacts

	Reference	Series: Standard	Series: Watertight	Number of contacts	ø A (mm)	Contact type: Solder	Contact type: Crimp	Contact type: Print (straight)	Contact type: Print (elbow)	Test voltage (kV rms)[1) 2)]	Test voltage (kV dc)[1) 2)]	Rated current (A)[1)]
0S 0E	302	0S	0E	2	0.9	●	●	●	●	1.5	2.1	10[3)]
	303	0S	0E	3	0.7	●	○	●	●	1.0	1.5	7[3)]
	304	0S	0E	4	0.7	●	○	●	●	1.0	1.5	7[3)]
1S 1E	302	1S	1E	2	1.3	●	●	●	●	1.2	1.8	15[3)]
	303	1S	1E	3	0.9	●	○	●	●	1.2	1.8	10[3)]
	304	1S	1E	4	0.9	●	●	●	●	1.2	1.8	10[3)]
	305	1S	1E	2 3	0.9 0.7	●	○	●	●	1.5 1.5	2.1 2.1	10[3)] 7[3)]
	306	1S	1E	6	0.7	●	○	●	●	1.5	2.1	7[3)]
2S 2E	302	2S	2E	2	1.6	●	○	○	○	1.8	2.4	20[4)]
	303	2S	2E	3	1.3	●	○	●	○	1.5	2.1	15[4)]
	304	2S	2E	4	1.3	●	○	●	●	1.8	2.4	15[4)]
	305	2S	2E	5	1.3	●	○	●	●	1.5	2.1	13[4)]
	306	2S	2E	6	1.3	●	●[5)]	●	●	1.5	2.1	12
	307	2S	2E	3 4	1.3 0.9	●	○	●	●	0.8 0.8	1.2 1.2	12[3)] 9[3)]
	308	2S	2E	8	0.9	●	○	●	●	0.8	1.2	9[3)]
	310	2S	2E	10	0.9	●	○	●	●	0.8	1.2	7[3)]
3S 3E	302	3S	3E	2	2.0	●	○	○	–	3.0	4.2	23
	303	3S	3E	3	2.0	●	○	○	–	1.5	2.1	20
	304	3S	3E	4	2.0	●	○	○	–	1.5	2.1	18
	305	3S	3E	2 3	2.0 1.3	●	○	○	–	1.5 1.5	2.1 2.1	18 14
	306	3S	3E	6	1.3	●	○	●	–	2.1	3.0	14
	307	3S	3E	7	1.3	●	○	●	–	1.0	1.5	12

● First choice alternative ○ Special order alternative

Note:
1) **see calculation method, caution and suggested standard on page 204.**
2) lowest measured value; contact to contact or contact to shell.
3) rated current = 6A for socket with elbow (90°) contacts for printed circuit.
4) rated current = 12A for socket with elbow (90°) contacts for printed circuit.
5) only for FFL model.

Multipole

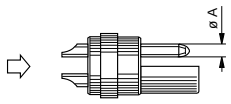

Male solder contacts

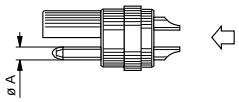

Female solder contacts

	Reference	Series: Standard	Series: Watertight	Number of contacts	ø A (mm)	Contact type: Solder	Contact type: Crimp	Contact type: Print (straight)	Contact type: Print (elbow)	Test voltage (kV rms)[1) 2)]	Test voltage (kV dc)[1) 2)]	Rated current (A)[1)]
3S 3E	308	3S	3E	8	1.3	●	○	●	○	1.0	1.5	10
	310	3S	3E	10	1.3	●	○	●	●	1.0	1.5	9
	312	3S	3E	12	0.9	●	○	●	●	1.5	2.1	8
	313	3S	3E	13	0.9	●	○	●	○	1.5	2.1	8
	314	3S	3E	14	0.9	●	○	●	●	1.5	2.1	7
	316	3S	3E	16	0.9	●	○	●	●	1.0	1.5	7
	318	3S	3E	18	0.9	●	○	●	○	1.0	1.5	6
4S 4E	302	4S	4E	2	4.0	●	–	○	–	2.1	3.0	35
	303	4S	4E	3	3.0	●	–	○	–	2.1	3.0	25
	304	4S	4E	4	3.0	●	–	○	–	2.1	3.0	22
	305	4S	4E	2 3	3.0 2.0	●	–	○	–	2.1 2.1	3.0 3.0	22 16
	306	4S	4E	6	2.0	●	●	○	–	2.1	3.0	16
	307	4S	4E	3 4	2.0 1.3	●	–	○	–	2.1 2.1	3.0 3.0	16 13
	308	4S	4E	8	1.3	●	–	○	–	2.7	3.9	13
	309	4S	4E	9	1.3	●	–	○	–	2.1	3.0	12
	310	4S	4E	10	1.3	●	–	○	–	2.1	3.0	11
	312	4S	4E	12	1.3	●	–	○	–	2.1	3.0	9
	313	4S	–	13	1.3	●	–	○	–	2.1	3.0	9

Note: 1) see calculation method, caution and suggested standard on page 204.
2) lowest measured value; contact to contact or contact to shell.

● First choice alternative ○ Special order alternative

Multipole

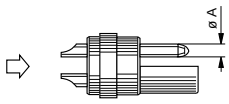

Male solder contacts

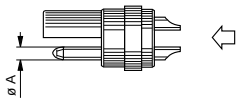

Female solder contacts

4S 4E

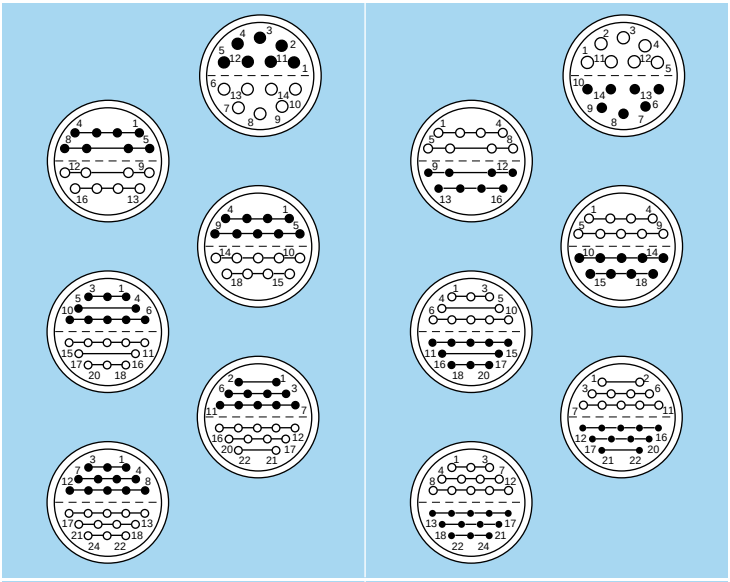

Reference	Series: Standard	Series: Watertight	Number of contacts	ø A (mm)	Contact type: Solder	Contact type: Print (straight)	Contact type: Print (elbow)	Test voltage (kV rms)[1) 2)]	Test voltage (kV dc)[1) 2)]	Rated current (A)[1)]
314	4S	4E	14	1.3	●	○	–	2.1	3.0	9
316	4S	4E	16	0.9	●	○	–	2.1	3.0	7
318	4S	4E	18	0.9	●	○	–	2.1	3.0	7
320	4S	4E	20	0.9	●	○	–	2.1	3.0	7
322	4S	4E	22	0.9	●	○	–	2.1	3.0	7
324	4S	4E	24	0.9	●	○	–	2.1	3.0	7

5S 5E

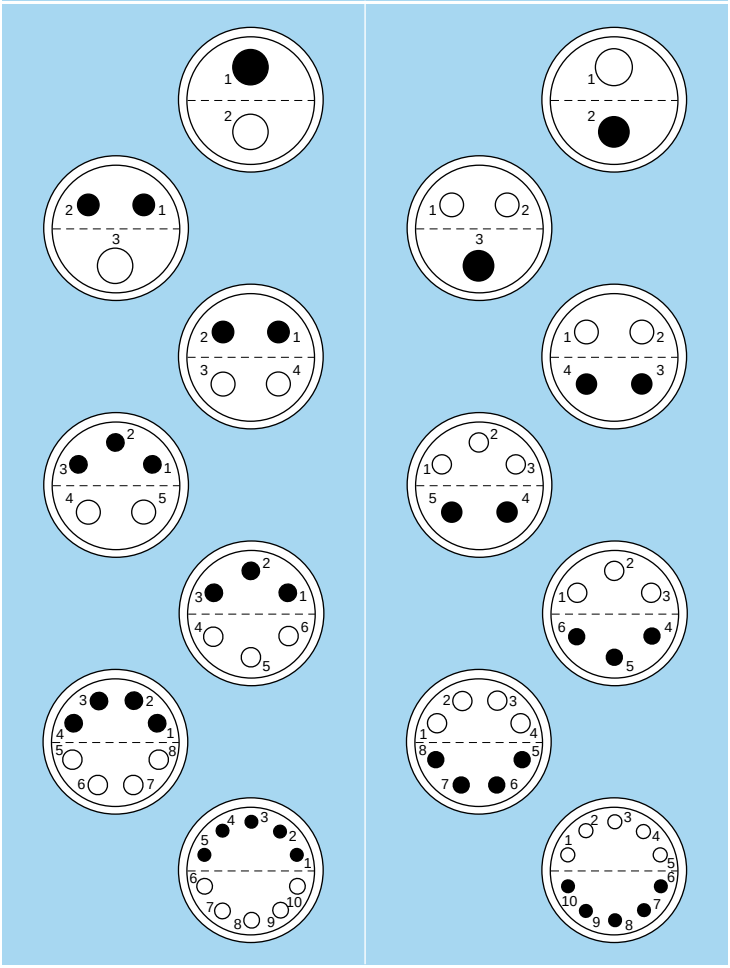

Reference	Series: Standard	Series: Watertight	Number of contacts	ø A (mm)	Contact type: Solder	Contact type: Print (straight)	Contact type: Print (elbow)	Test voltage (kV rms)[1) 2)]	Test voltage (kV dc)[1) 2)]	Rated current (A)[1)]
302	5S	5E	2	6.0	●	–	–	3.7	5.2	50
303	5S	5E	1 2	6.0 4.0	●	–	–	3.7 3.7	5.2 5.2	50 35
304	5S	5E	4	4.0	●	–	–	3.7	5.2	35
305	5S	5E	2 3	4.0 3.0	●	–	–	3.0 3.0	4.2 4.2	35 25
306	5S	5E	6	3.0	●	–	–	3.0	4.2	25
308	5S	5E	8	3.0	●	–	–	2.1	3.0	22
310	5S	5E	10	2.0	●	–	–	2.1	3.0	18

Note: 1) see calculation method, caution and suggested standard on page 204.
2) lowest measured value; contact to contact or contact to shell.

Multipole

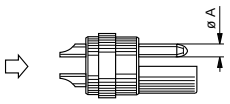

Male solder contacts

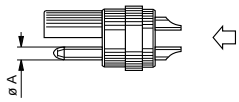

Female solder contacts

5S
5E

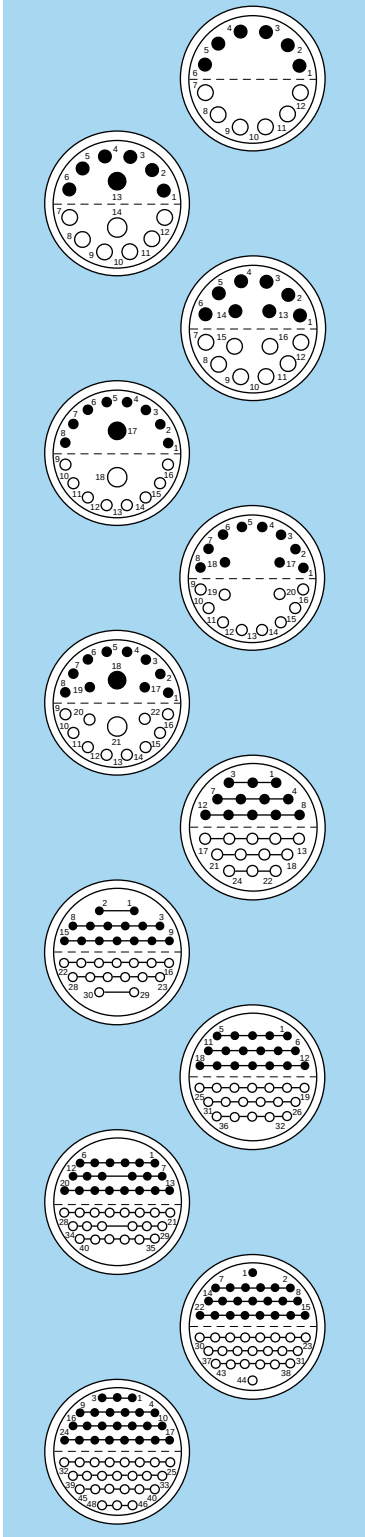

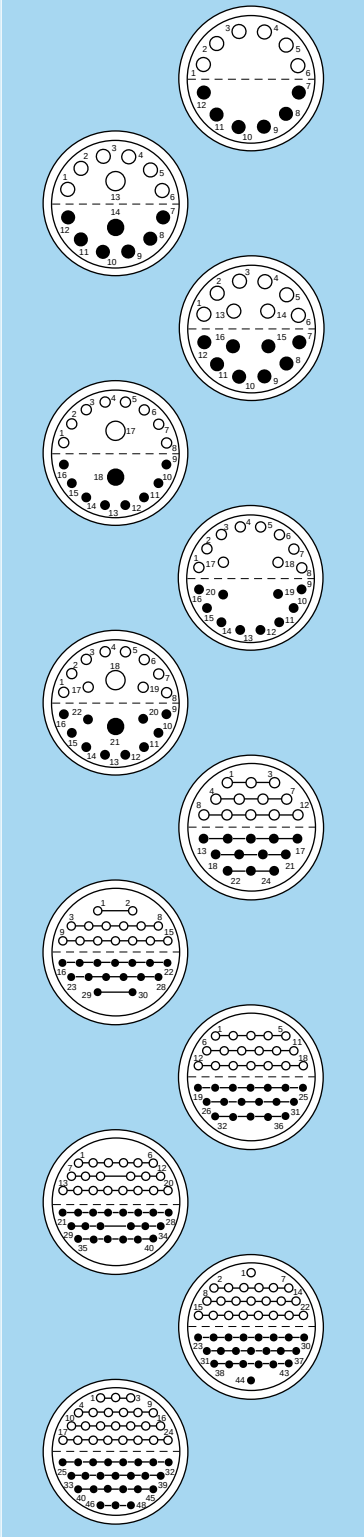

Reference	Series: Standard	Series: Watertight	Number of contacts	ø A (mm)	Contact type: Solder	Contact type: Print (straight)	Contact type: Print (elbow)	Test voltage (kV rms)[1) 2)]	Test voltage (kV dc)[1) 2)]	Rated current (A)[1)]
312	5S	5E	12	2.0	●	–	–	2.1	3.0	18
314	5S	5E	2 12	3.0 2.0	●	–	–	1.8 1.8	2.4 2.4	20 15
316	5S	5E	16	2.0	●	–	–	1.8	2.4	15
318	5S	5E	2 16	3.0 1.6	●	–	–	1.8 1.8	2.4 2.4	18 11
320	5S	5E	20	1.6	●	–	–	1.8	2.4	11
322	5S	5E	2 20	3.0 1.6	●	–	–	1.8 1.8	2.4 2.4	16 9
324	5S	5E	24	1.6	●	–	–	2.7	3.9	9
330	5S	5E	30	1.3	●	–	–	1.8	2.4	8
336	5S	5E	36	1.3	●	–	–	1.8	2.4	7
340	5S	5E	40	1.3	●	–	–	1.2	1.8	7
344	5S	5E	44	1.3	●	–	–	1.2	1.8	6
348	5S	5E	48	1.3	●	–	–	1.2	1.8	6

Note: 1) see calculation method, caution and suggested standard on page 204.
2) lowest measured value; contact to contact or contact to shell.

Multipole

6S
6E

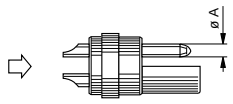

Male solder contacts

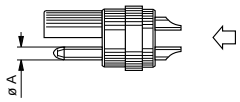

Female solder contacts

Reference	Series: Standard	Series: Watertight	Number of contacts	ø A (mm)	Solder contacts	Test voltage (kV rms)[1) 2)]	Test voltage (kV dc)[1) 2)]	Rated current (A)[1)]
303	–	6E	3	6.0	●	3.0	4.2	50
304	6S	6E	4	8.0	●	3.0	4.2	60
312	6S –	– 6E	12 12	4.0 5.0	●	2.1	3.0	22
316	–	6E	16	3.0	●	1.5	2.1	14
318	6S	–	18	4.0	●	1.2	1.8	16
320	6S	–	20	3.0	●	1.5	2.1	14
320	–	6E	20	3.0	●	1.5	2.1	14

Note: 1) see calculation method, caution and suggested standard on page 204.
2) lowest measured value; contact to contact or contact to shell.

Multipole

6S
6E

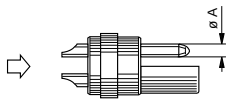

Male solder contacts

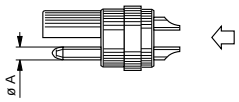

Female solder contacts

Reference	Series: Standard	Series: Watertight	Number of contacts	ø A (mm)	Solder contacts	Test voltage (kV rms)[1) 2)]	Test voltage (kV dc)[1) 2)]	Rated current (A)[1)]
324	6S	–	24	3.0	●	1.2	1.8	12
324	–	6E	24	3.0	●	1.2	1.8	12
330	6S	6E	30	2.0	●	2.1	3.0	10
332	–	6E	32	2.0	●	1.5	2.1	10
336	6S	–	36	2.0	●	1.5	2.1	8
336	–	6E	30 6	1.3 5.0	●	1.5 1.5	2.1 2.1	4 22
340	–	6E	40	2.0	●	1.5	2.1	8

Note: 1) see calculation method, caution and suggested standard on page 204.
2) lowest measured value; contact to contact or contact to shell.

Multipole

6S
6E

Male solder contacts	Female solder contacts	Reference	Series: Standard	Series: Watertight	Number of contacts	ø A (mm)	Solder contacts	Test voltage (kV rms)[1) 2)]	Test voltage (kV dc)[1) 2)]	Rated current (A)[1)]
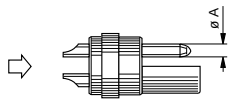	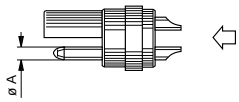	348	6S	6E	48	2.0	●	1.5	2.1	7
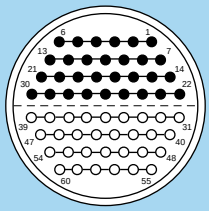	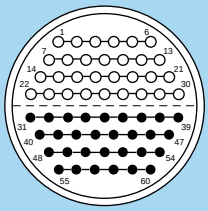	360	6S	6E	60	1.6	●	1.5	2.1	5
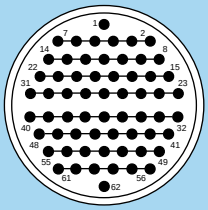	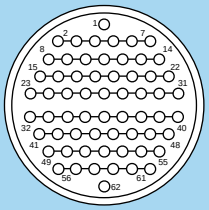	362	–	6E	62	1.6	●	1.5	2.1	5
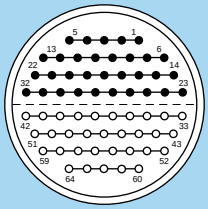	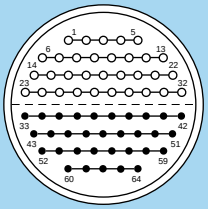	364	6S	6E	64	1.3	●	1.2	1.8	4
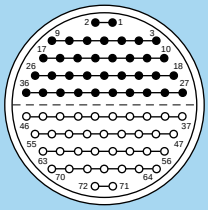	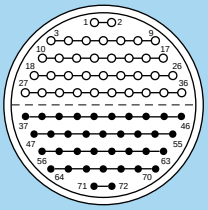	372	6S	6E	72	1.3	●	1.2	1.8	4
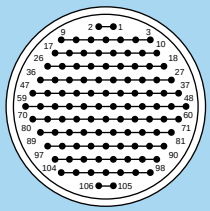	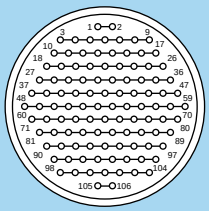	106	–	6E	106	0.9	●	0.8	1.2	2
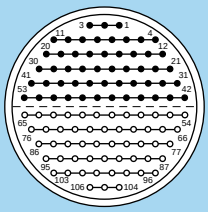	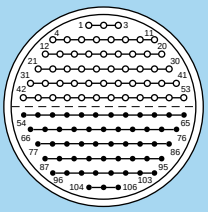	106	6S	–	106	0.9	●	0.8	1.2	2

Note: 1) see calculation method, caution and suggested standard on page 204.
2) lowest measured value; contact to contact or contact to shell.

Housings (S and E series)

Ref.	Material	Surface treatment		Note
		Outer shell and collet nut	Latch sleeve and earthing crown	
C	Brass[1]	chrome	nickel	●
D	Brass	gold-plated	nickel	○
N	Brass	nickel	nickel	○
K	Brass	black chrome	nickel	●
S	Stainless steel	without treatment	nickel-plated brass	○
T	Stainless steel	without treatment	stainless steel	○
U	Stainless steel[2]	without treatment	stainless steel	○
L	Aluminium alloy[3]	anodized	nickel-plated brass	○
B	POM black[4]	without treatment	nickel-plated brass	●
H	PPS/brass[5]	without treat./nickel	nickel	●
G	PEEK[4]	without treatment	nickel-plated brass	●
P	PSU[6]	without treatment	nickel-plated brass	●
R	PPSU[7]	without treatment	nickel-plated brass	●

Note:
1) in the E series the latch sleeve is chrome-plated.
2) the other metallic components are in stainless steel.
3) the «variant» position of the reference is used to specify the anodized colour.
4) only available for FFP, ERN and PCP models of the S series.
5) for S series EPL and EXP elbow (90°) sockets for printed circuit.
6) available only for the FFL model of the S series. See colours in «variant» position.
7) available only for the FFL model of the S series.
Detailed characteristics of these materials are presented on page 198.

● First choice alternative ○ Special order alternative

Insulators (S and E series)

Ref.	Material or form	Note
L	PEEK	●
T	PTFE [1]	●
T	FEP [2]	○

Ref.	Material or form	Note
V	PI [2]	○
N	PA6.6 [3]	●

Note:
1) only for unipole types.
2) only for multipole types.
3) material for 5S/5E and 6S/6E series multipole inserts.
Detailed characteristics of these materials are presented on page 201.

● First choice alternative ○ Special order alternative

Contacts (S and E series)

Contacts for plugs, free or fixed sockets

Ref.	Contact type
A	Male solder
C	Male crimp [1] [4]
L	Female solder
M	Female crimp [2] [4]
N	Female print (straight)
V	Female print (elbow)

Multipole connectors are fitted with hermaphroditic inserts including male and female contacts.
However, by convention, the letter indicating the contact type in the part number composition will be the male contact (reference A) for plugs and female contact (reference L) for sockets.
In case of an odd number of contacts, the letter of reference corresponds to the one with the larger number of contacts. For example, a 309 type connector with contact (reference A) will include 5 male and 4 female contacts.

Contacts for couplers and plug with socket

Ref.	Contact type	unipole	multipole
A	Male - Female	○	–
L	Female - Male	○	●
M	Female - Female	●	○
F	Female - Female - Male [3]	●	●

For RAD and SWH fixed couplers, the first contact type mentioned is always the one at the flange end. Contact configuration and sockets to be used for a connection are explained on the following page.

Note:
1) for the FFS model of the 00 series and FFA or FFL models of the S series.
2) for the PSS model of the 00 series and PCA or PSA models of the S series.
3) for the FTA model of the S series.
4) for conductor range that can fit with crimp contacts consult page 9.

Connectors can be configured « inverted» i.e. plugs equiped with female contacts (reference L), sockets with male contacts (reference A). This solution is particularly useful when plugs are mated to a coupler and it is essential to respect contact alignment (see next page).

Contact configuration for RMA, RAD and SWH fixed couplers

A Male - Female

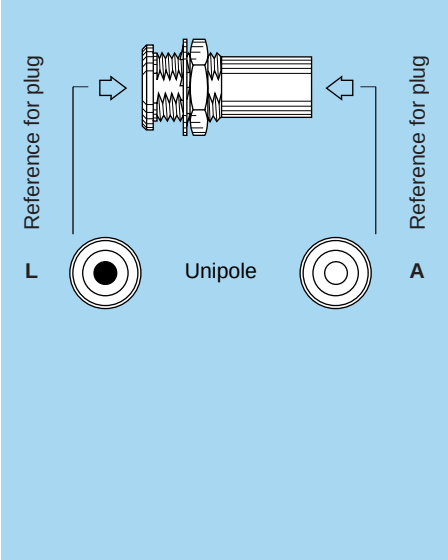

L Female - Male

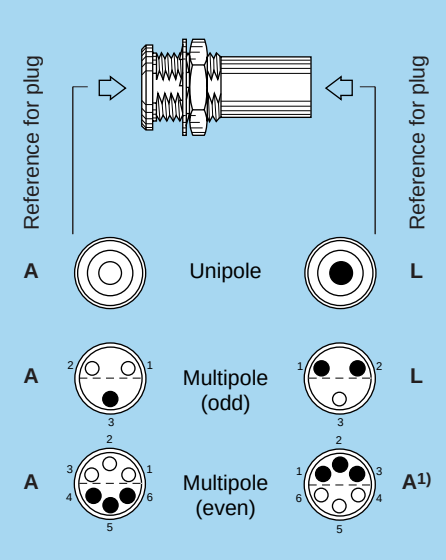

M Female - Female

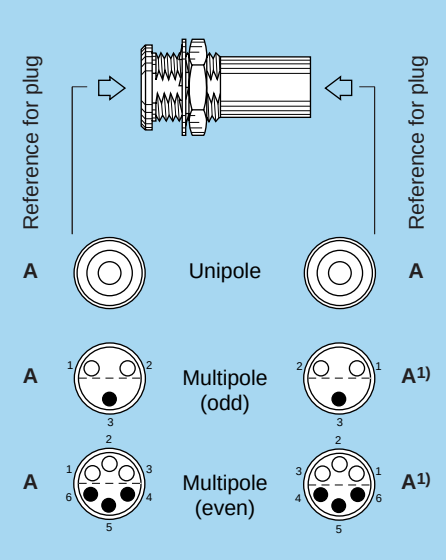

Use of plugs for mating with RAD, RMA and SWH couplers

Unipole type:

Reference M for coupling two identical plugs fitted with male contact (contact reference A).
Reference L for coupling a plug fitted with male contacts (contact reference A) at the flange end for RAD and SWH and an inverted plug fitted with female contacts (contact reference L) at the other end.
Reference A for the inverted version of code L.

Multipole type:

Reference L for coupling a standard plug (contact reference A) at the flange end for RAD and SWH and an inverted plug (contact reference as indicated in the above table) at the other end.
Reference M for coupling two standard plugs (contact type A).
Only available for RAD and RMA models.

Note: 1) this connector combination does not allow for contact numbering. One of the plugs has to be cable mounted in a way to ensure correct signal continuity.

Collets (S and E series)

C, K and L type collets

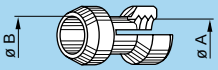

C or K type collets

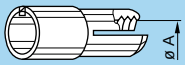

L type collets

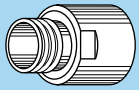

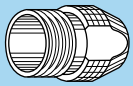

	Reference		Collet		Cable ø		Part number of the collet [1]	Part number of the oversize collet and of the split centre-pieces [3]	Part number of the collet nut [3] [5]
	Type	ø	ø A	ø B	max.	min.			
00	C	15	1.5	–	1.4	1.1	FFA.00.715.CN	–	FFA.00.130.LC
	C	17	1.7	1.5	1.6	1.3	FFA.00.717.CN	–	FFA.00.130.LC
	C	22	2.2	–	2.1	1.7	FFA.00.722.CN	–	FFA.00.130.LC
	C	27	2.7	–	2.6	2.2	FFA.00.727.CN	–	FFA.00.130.LC
	C	29	2.9	2.4	2.8	2.4	FFA.00.729.CN	–	FFA.00.130.LC
	C	31	3.1	2.7	3.0	2.6	FFA.00.731.CN	–	FFA.00.130.LC
	K	37	3.7	–	3.6	3.0	FFA.0S.737.CN	FFA.00.137.LCN	FFA.0S.130.LC
	K	42	4.2	3.7	4.1	3.3	FFA.0S.742.CN	FFA.00.137.LCN	FFA.0S.130.LC
	C	16	1.6	–	1.5	1.2	FFC.00.716.CN [2]	–	FFA.00.130.LC
	C	19	1.9	1.6	1.8	1.5	FFC.00.719.CN [2]	–	FFA.00.130.LC
	C	22	2.2	1.6	2.1	1.7	FFC.00.722.CN [2]	–	FFA.00.130.LC
	C	27	2.7	2.4	2.6	2.2	FFC.00.727.CN [2]	–	FFA.00.130.LC
	C	29	2.9	2.4	2.8	2.4	FFC.00.729.CN [2]	–	FFA.00.130.LC
	C	31	3.1	2.4	3.0	2.6	FFC.00.731.CN [2]	–	FFA.00.130.LC
	L	17	1.7	–	1.6	1.3	FFA.00.717.LN	–	FFA.00.130.LC
	L	22	2.2	–	2.1	1.7	FFA.00.722.LN	–	FFA.00.130.LC
	L	27	2.7	–	2.6	2.2	FFA.00.727.LN	–	FFA.00.130.LC
	L	29	2.9	–	2.8	2.4	FFA.00.729.LN	–	FFA.00.130.LC
	L	31	3.1	–	3.0	2.6	FFA.00.731.LN	–	FFA.00.130.LC
0S	C	17	1.7	–	1.6	1.3	FFA.0S.717.CN	–	FFA.0S.130.LC
	C	22	2.2	–	2.1	1.7	FFA.0S.722.CN	–	FFA.0S.130.LC
	C	27	2.7	–	2.6	2.2	FFA.0S.727.CN	–	FFA.0S.130.LC
	C	32	3.2	–	3.1	2.7	FFA.0S.732.CN	–	FFA.0S.130.LC
	C	37	3.7	–	3.6	3.0	FFA.0S.737.CN	–	FFA.0S.130.LC
	C	42	4.2	3.7	4.1	3.3	FFA.0S.742.CN	–	FFA.0S.130.LC
	C	44	4.4	3.7	4.3	3.5	FFA.0S.744.CN	–	FFA.0S.132.LC
	K	47	4.7	–	4.6	3.8	FFA.1S.747.CN	FFA.0S.137.LCN	FFA.1S.130.LC
	K	52	5.2	–	5.1	4.3	FFA.1S.752.CN	FFA.0S.137.LCN	FFA.1S.130.LC
	K	57	5.7	–	5.6	4.8	FFA.1S.757.CN	FFA.0S.137.LCN	FFA.1S.130.LC
	K	62	6.2	5.2	6.1	5.3	FFA.1S.762.CN	FFA.0S.137.LCN	FFA.1S.130.LC
	K	66	6.6	5.4	6.5	5.9	FFA.1S.766.CN	FFA.0S.137.LCN	FFA.1S.131.LC
	K	68	6.8	–	6.7	6.0	FFA.1S.768.CN	FFA.0S.137.LCN	FFA.1S.131.LC
	C	17	1.7	–	1.6	1.3	FLA.0S.717.CN [4]	–	FFA.0S.130.LC
	C	22	2.2	–	2.1	1.7	FLA.0S.722.CN [4]	–	FFA.0S.130.LC
	C	27	2.7	–	2.6	2.2	FLA.0S.727.CN [4]	–	FFA.0S.130.LC
	C	32	3.2	–	3.1	2.7	FLA.0S.732.CN [4]	–	FFA.0S.130.LC
	C	37	3.7	–	3.6	3.0	FLA.0S.737.CN [4]	–	FFA.0S.130.LC
	C	42	4.2	3.7	4.1	3.3	FLA.0S.742.CN [4]	–	FFA.0S.130.LC
	C	44	4.4	3.7	4.3	3.5	FLA.0S.744.CN [4]	–	FFA.0S.132.LC
	L	17	1.7	–	1.6	1.3	FFA.0S.717.LN	–	FFA.0S.130.LC
	L	22	2.2	–	2.1	1.7	FFA.0S.722.LN	–	FFA.0S.130.LC
	L	27	2.7	–	2.6	2.2	FFA.0S.727.LN	–	FFA.0S.130.LC
	L	32	3.2	–	3.1	2.7	FFA.0S.732.LN	–	FFA.0S.130.LC
	L	37	3.7	–	3.6	3.0	FFA.0S.737.LN	–	FFA.0S.130.LC
	L	42	4.2	–	4.1	3.3	FFA.0S.742.LN	–	FFA.0S.130.LC
	L	44	4.4	–	4.3	3.5	FFA.0S.744.LN	–	FFA.0S.132.LC

Note: see following page for text of notes [1] through [5].
All dimensions are in millimetres.

C, K and L type collets

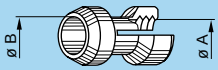

C or K type collet

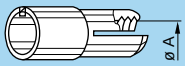

L type collet

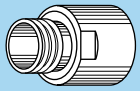

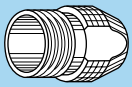

1S

Reference		Collet		Cable ø		Part number of the collet [1]	Part number of the oversize collet and of the split centre-pieces [3]	Part number of the collet nut [3] [5]
Type	ø	ø A	ø B	max.	min.			
C	17	1.7	–	1.6	1.3	FFA.1S.717.CN	–	FFA.1S.130.LC
C	22	2.2	–	2.1	1.7	FFA.1S.722.CN	–	FFA.1S.130.LC
C	27	2.7	–	2.6	2.2	FFA.1S.727.CN	–	FFA.1S.130.LC
C	32	3.2	–	3.1	2.6	FFA.1S.732.CN	–	FFA.1S.130.LC
C	37	3.7	–	3.6	2.7	FFA.1S.737.CN	–	FFA.1S.130.LC
C	42	4.2	–	4.1	3.3	FFA.1S.742.CN	–	FFA.1S.130.LC
C	47	4.7	–	4.6	3.8	FFA.1S.747.CN	–	FFA.1S.130.LC
C	52	5.2	–	5.1	4.3	FFA.1S.752.CN	–	FFA.1S.130.LC
C	57	5.7	–	5.6	4.8	FFA.1S.757.CN	–	FFA.1S.130.LC
C	62	6.2	5.2	6.1	5.3	FFA.1S.762.CN	–	FFA.1S.130.LC
C	66	6.6	5.4	6.5	5.9	FFA.1S.766.CN	–	FFA.1S.131.LC
C	68	6.8	–	6.7	6.0	FFA.1S.768.CN	–	FFA.1S.131.LC
K	72	7.2	6.7	7.0	6.1	FFA.2S.772.CN	FFA.1S.137.LCN	FFA.2S.130.LC
K	77	7.7	6.7	7.5	7.1	FFA.2S.777.CN	FFA.1S.137.LCN	FFA.2S.130.LC
K	82	8.2	6.7	8.0	7.6	FFA.2S.782.CN	FFA.1S.137.LCN	FFA.2S.130.LC
K	87	8.7	6.7	8.5	8.1	FFA.2S.787.CN	FFA.1S.137.LCN	FFA.2S.130.LC
C	17	1.7	–	1.6	1.3	FLA.1S.717.CN [4]	–	FFA.1S.130.LC
C	22	2.2	–	2.1	1.7	FLA.1S.722.CN [4]	–	FFA.1S.130.LC
C	27	2.7	–	2.6	2.2	FLA.1S.727.CN [4]	–	FFA.1S.130.LC
C	32	3.2	–	3.1	2.6	FLA.1S.732.CN [4]	–	FFA.1S.130.LC
C	37	3.7	–	3.6	2.7	FLA.1S.737.CN [4]	–	FFA.1S.130.LC
C	42	4.2	–	4.1	3.3	FLA.1S.742.CN [4]	–	FFA.1S.130.LC
C	47	4.7	–	4.6	3.8	FLA.1S.747.CN [4]	–	FFA.1S.130.LC
C	52	5.2	–	5.1	4.3	FLA.1S.752.CN [4]	–	FFA.1S.130.LC
C	57	5.7	–	5.6	4.8	FLA.1S.757.CN [4]	–	FFA.1S.130.LC
C	62	6.2	5.2	6.1	5.3	FLA.1S.762.CN [4]	–	FFA.1S.130.LC
C	66	6.6	5.4	6.5	5.9	FLA.1S.766.CN [4]	–	FFA.1S.131.LC
C	68	6.8	5.5	6.7	6.0	FLA.1S.768.CN [4]	–	FFA.1S.131.LC
L	17	1.7	–	1.6	1.3	FFA.1S.717.LN	–	FFA.1S.130.LC
L	22	2.2	–	2.1	1.7	FFA.1S.722.LN	–	FFA.1S.130.LC
L	27	2.7	–	2.6	2.2	FFA.1S.727.LN	–	FFA.1S.130.LC
L	32	3.2	–	3.1	2.6	FFA.1S.732.LN	–	FFA.1S.130.LC
L	37	3.7	–	3.6	2.7	FFA.1S.737.LN	–	FFA.1S.130.LC
L	42	4.2	–	4.1	3.3	FFA.1S.742.LN	–	FFA.1S.130.LC
L	47	4.7	–	4.6	3.8	FFA.1S.747.LN	–	FFA.1S.130.LC
L	50	5.0	–	4.9	4.7	FFA.1S.750.LN	–	FFA.1S.130.LC
L	52	5.2	–	5.1	4.3	FFA.1S.752.LN	–	FFA.1S.130.LC
L	57	5.7	–	5.6	4.8	FFA.1S.757.LN	–	FFA.1S.130.LC
L	62	6.2	–	6.1	5.3	FFA.1S.762.LN	–	FFA.1S.130.LC
L	66	6.6	–	6.5	5.9	FFA.1S.766.LN	–	FFA.1S.131.LC

Note:
1) for ordering collets separately.
2) these collets can only be used with the FLA model.
3) for ordering a K type collet separately, the oversize collet and the corresponding collet nut should also be ordered.
4) these collets should be used with FLA, FFP and PCP models.
5) for models with bend relief, the FFM.●●.130.LC collet nut should be ordered (see page 120).
All dimensions are in millimetres.

C, K and L type collets

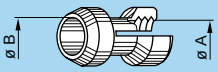

C or K type collet

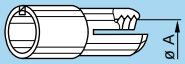

L type collet

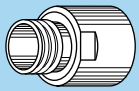

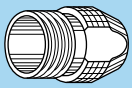

2S

Reference		Collet		Cable ø		Part number of the collet [1]	Part number of the oversize collet and of the split centre-pieces [3]	Part number of the collet nut [3] [5]
Type	ø	ø A	ø B	max.	min.			
C	17	1.7	–	1.6	1.3	FFA.2S.717.CN	–	FFA.2S.130.LC
C	27	2.7	–	2.5	1.7	FFA.2S.727.CN	–	FFA.2S.130.LC
C	32	3.2	–	3.0	2.5	FFA.2S.732.CN	–	FFA.2S.130.LC
C	42	4.2	–	4.0	3.1	FFA.2S.742.CN	–	FFA.2S.130.LC
C	52	5.2	–	5.0	4.1	FFA.2S.752.CN	–	FFA.2S.130.LC
C	62	6.2	–	6.0	5.1	FFA.2S.762.CN	–	FFA.2S.130.LC
C	72	7.2	6.7	7.0	6.1	FFA.2S.772.CN	–	FFA.2S.130.LC
C	77	7.7	6.7	7.5	7.1	FFA.2S.777.CN	–	FFA.2S.130.LC
C	82	8.2	6.7	8.0	7.6	FFA.2S.782.CN	–	FFA.2S.130.LC
C	87	8.7	6.7	8.5	8.1	FFA.2S.787.CN	–	FFA.2S.130.LC
K	92	9.2	8.7	9.0	8.1	FFA.3S.792.CN	FFA.2S.137.LCN	FFA.3S.130.LC
K	97	9.7	8.7	9.5	9.1	FFA.3S.797.CN	FFA.2S.137.LCN	FFA.3S.130.LC
K	10	10.2	8.7	10.0	9.6	FFA.3S.710.CN	FFA.2S.137.LCN	FFA.3S.130.LC
K	11	10.7	9.0	10.5	10.1	FFA.3S.711.CN	FFA.2S.137.LCN	FFA.3S.130.LC
C	17	1.7	–	1.6	1.3	FLA.2S.717.CN [4]	–	FFA.2S.130.LC
C	27	2.7	–	2.5	1.7	FLA.2S.727.CN [4]	–	FFA.2S.130.LC
C	32	3.2	–	3.0	2.5	FLA.2S.732.CN [4]	–	FFA.2S.130.LC
C	42	4.2	–	4.0	3.1	FLA.2S.742.CN [4]	–	FFA.2S.130.LC
C	52	5.2	–	5.0	4.1	FLA.2S.752.CN [4]	–	FFA.2S.130.LC
C	62	6.2	–	6.0	5.1	FLA.2S.762.CN [4]	–	FFA.2S.130.LC
C	72	7.2	6.7	7.0	6.1	FLA.2S.772.CN [4]	–	FFA.2S.130.LC
C	77	7.7	6.7	7.5	7.1	FLA.2S.777.CN [4]	–	FFA.2S.130.LC
C	82	8.2	6.7	8.0	7.6	FLA.2S.782.CN [4]	–	FFA.2S.130.LC
C	87	8.7	6.7	8.5	8.1	FLA.2S.787.CN [4]	–	FFA.2S.130.LC
L	27	2.7	–	2.5	1.7	FFA.2S.727.LN	–	FFA.2S.130.LC
L	32	3.2	–	3.0	2.5	FFA.2S.732.LN	–	FFA.2S.130.LC
L	42	4.2	–	4.0	3.1	FFA.2S.742.LN	–	FFA.2S.130.LC
L	52	5.2	–	5.0	4.1	FFA.2S.752.LN	–	FFA.2S.130.LC
L	62	6.2	–	6.0	5.1	FFA.2S.762.LN	–	FFA.2S.130.LC
L	72	7.2	–	7.0	6.1	FFA.2S.772.LN	–	FFA.2S.130.LC
L	77	7.9	–	7.5	7.1	FFA.2S.777.LN	–	FFA.2S.130.LC
L	82	8.2	–	8.0	7.6	FFA.2S.782.LN	–	FFA.2S.130.LC
L	87	8.7	–	8.5	8.1	FFA.2S.787.LN	–	FFA.2S.130.LC

Note:
[1] for ordering collets separately.
[3] for ordering a K type collet separately, the oversize collet and the corresponding collet nut should also be ordered.
[4] these collets should be used with FLA, FFP and PCP models.
[5] for models with bend relief, the FFM.●●.130.LC collet nut should be ordered (see page 120).
All dimensions are in millimetres.

C, K and L type collets

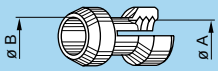

C or K type collet

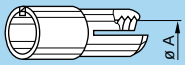

L type collet

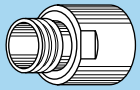

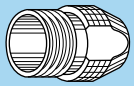

3S

Reference		Collet		Cable ø		Part number of the collet [1]	Part number of the oversize collet and of the split centre-pieces [3]	Part number of the collet nut [3] [5]
Type	ø	ø A	ø B	max.	min.			
C	32	3.2	–	3.0	2.5	FFA.3S.732.CN	–	FFA.3S.130.LC
C	42	4.2	–	4.0	3.1	FFA.3S.742.CN	–	FFA.3S.130.LC
C	52	5.2	–	5.0	4.1	FFA.3S.752.CN	–	FFA.3S.130.LC
C	62	6.2	–	6.0	5.1	FFA.3S.762.CN	–	FFA.3S.130.LC
C	72	7.2	–	7.0	6.1	FFA.3S.772.CN	–	FFA.3S.130.LC
C	82	8.2	–	8.0	7.1	FFA.3S.782.CN	–	FFA.3S.130.LC
C	92	9.2	8.7	9.0	8.1	FFA.3S.792.CN	–	FFA.3S.130.LC
C	97	9.7	8.7	9.5	9.1	FFA.3S.797.CN	–	FFA.3S.130.LC
C	10	10.2	8.7	10.0	9.6	FFA.3S.710.CN	–	FFA.3S.130.LC
C	11	10.7	9.0	10.5	10.1	FFA.3S.711.CN	–	FFA.3S.130.LC
K	12	12.2	–	12.0	11.1	FFA.4S.712.CN	FFA.3S.137.LCN	FFA.4S.130.LC
K	13	13.2	12.2	13.0	12.1	FFA.4S.713.CN	FFA.3S.137.LCN	FFA.4S.130.LC
C	32	3.2	–	3.0	2.5	FLA.3S.732.CN [4]	–	FFA.3S.130.LC
C	42	4.2	–	4.0	3.1	FLA.3S.742.CN [4]	–	FFA.3S.130.LC
C	52	5.2	–	5.0	4.1	FLA.3S.752.CN [4]	–	FFA.3S.130.LC
C	62	6.2	–	6.0	5.1	FLA.3S.762.CN [4]	–	FFA.3S.130.LC
C	72	7.2	–	7.0	6.1	FLA.3S.772.CN [4]	–	FFA.3S.130.LC
C	82	8.2	–	8.0	7.1	FLA.3S.782.CN [4]	–	FFA.3S.130.LC
C	92	9.2	8.7	9.0	8.1	FLA.3S.792.CN [4]	–	FFA.3S.130.LC
C	97	9.7	8.7	9.5	9.1	FLA.3S.797.CN [4]	–	FFA.3S.130.LC
C	10	10.7	8.7	10.5	9.8	FLA.3S.710.CN [4]	–	FFA.3S.130.LC
C	11	10.7	9.0	10.5	10.1	FLA.3S.711.CN [4]	–	FFA.3S.130.LC
L	42	4.2	–	4.0	3.1	FFA.3S.742.LN	–	FFA.3S.130.LC
L	52	5.2	–	5.0	4.1	FFA.3S.752.LN	–	FFA.3S.130.LC
L	62	6.2	–	6.0	5.1	FFA.3S.762.LN	–	FFA.3S.130.LC
L	72	7.2	–	7.0	6.1	FFA.3S.772.LN	–	FFA.3S.130.LC
L	82	8.2	–	8.0	7.1	FFA.3S.782.LN	–	FFA.3S.130.LC
L	92	9.2	–	9.0	8.1	FFA.3S.792.LN	–	FFA.3S.130.LC
L	97	9.7	–	9.5	9.1	FFA.3S.797.LN	–	FFA.3S.130.LC
L	10	10.2	–	10.0	9.6	FFA.3S.710.LN	–	FFA.3S.130.LC
L	11	10.7	–	10.5	10.1	FFA.3S.711.LN	–	FFA.3S.130.LC

Note:
[1] for ordering collets separately.
[3] for ordering a K type collet separately, the oversize collet and the corresponding collet nut should also be ordered.
[4] these collets should be used with FLA, FFP and PCP models.
[5] for models with bend relief, the FFM.●●.130.LC collet nut should be ordered (see page 120).
All dimensions are in millimetres.

C, K and L type collets

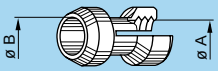

C or K type collet

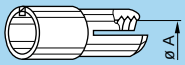

L type collet

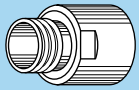

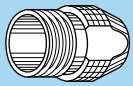

4S

Reference		Collet		Cable ø		Part number of the collet [1]	Part number of the oversize collet and of the split centre-pieces [3]	Part number of the collet nut [3] [5]
Type	ø	ø A	ø B	max.	min.			
C	52	5.2	–	5.0	4.1	FFA.4S.752.CN	–	FFA.4S.130.LC
C	62	6.2	–	6.0	5.1	FFA.4S.762.CN	–	FFA.4S.130.LC
C	72	7.2	–	7.0	6.1	FFA.4S.772.CN	–	FFA.4S.130.LC
C	82	8.2	–	8.0	7.1	FFA.4S.782.CN	–	FFA.4S.130.LC
C	92	9.2	–	9.0	8.1	FFA.4S.792.CN	–	FFA.4S.130.LC
C	10	10.2	–	10.0	9.1	FFA.4S.710.CN	–	FFA.4S.130.LC
C	11	11.2	–	11.0	10.1	FFA.4S.711.CN	–	FFA.4S.130.LC
C	12	12.2	–	12.0	11.1	FFA.4S.712.CN	–	FFA.4S.130.LC
C	13	13.2	12.2	13.0	12.6	FFA.4S.713.CN	–	FFA.4S.130.LC
K	14	14.2	–	14.0	13.1	FFA.5S.714.CN	FFA.4S.137.LCN	FFA.5S.130.LC
K	15	15.2	–	15.0	14.1	FFA.5S.715.CN	FFA.4S.137.LCN	FFA.5S.130.LC
K	16	16.2	–	16.0	15.1	FFA.5S.716.CN	FFA.4S.137.LCN	FFA.5S.130.LC
K	17	17.2	–	17.0	16.1	FFA.5S.717.CN	FFA.4S.137.LCN	FFA.5S.130.LC
K	18	18.2	–	18.0	17.1	FFA.5S.718.CN	FFA.4S.137.LCN	FFA.5S.130.LC
K	19	19.2	–	19.0	18.1	FFA.5S.719.CN	FFA.4S.137.LCN	FFA.5S.130.LC
K	20	20.2	19.7	20.0	19.1	FFA.5S.720.CN	FFA.4S.137.LCN	FFA.5S.130.LC
K	21	21.2	19.7	21.0	20.1	FFA.5S.721.CN	FFA.4S.137.LCN	FFA.5S.130.LC
K	22	22.2	19.7	22.0	21.1	FFA.5S.722.CN	FFA.4S.137.LCN	FFA.5S.130.LC
C	52	5.2	–	5.0	4.1	FLA.4S.752.CN [4]	–	FFA.4S.130.LC
C	62	6.2	–	6.0	5.1	FLA.4S.762.CN [4]	–	FFA.4S.130.LC
C	72	7.2	–	7.0	6.1	FLA.4S.772.CN [4]	–	FFA.4S.130.LC
C	82	8.2	–	8.0	7.1	FLA.4S.782.CN [4]	–	FFA.4S.130.LC
C	92	9.2	–	9.0	8.1	FLA.4S.792.CN [4]	–	FFA.4S.130.LC
C	10	10.2	–	10.0	9.1	FLA.4S.710.CN [4]	–	FFA.4S.130.LC
C	11	11.2	–	11.0	10.1	FLA.4S.711.CN [4]	–	FFA.4S.130.LC
C	12	12.2	–	12.0	11.1	FLA.4S.712.CN [4]	–	FFA.4S.130.LC
C	13	13.2	12.2	13.0	12.6	FLA.4S.713.CN [4]	–	FFA.4S.130.LC
L	52	5.2	–	5.0	4.1	FFA.4S.752.LN	–	FFA.4S.130.LC
L	62	6.2	–	6.0	5.1	FFA.4S.762.LN	–	FFA.4S.130.LC
L	72	7.2	–	7.0	6.1	FFA.4S.772.LN	–	FFA.4S.130.LC
L	82	8.2	–	8.0	7.1	FFA.4S.782.LN	–	FFA.4S.130.LC
L	92	9.2	–	9.0	8.1	FFA.4S.792.LN	–	FFA.4S.130.LC
L	10	10.2	–	10.0	9.1	FFA.4S.710.LN	–	FFA.4S.130.LC
L	11	11.2	–	11.0	10.1	FFA.4S.711.LN	–	FFA.4S.130.LC
L	12	12.2	–	12.0	11.1	FFA.4S.712.LN	–	FFA.4S.130.LC
L	13	13.2	–	13.0	12.6	FFA.4S.713.LN	–	FFA.4S.130.LC

Note:
[1] for ordering collets separately.
[3] for ordering a K type collet separately, the oversize collet and the corresponding collet nut should also be ordered.
[4] these collets should be used with FLA, FFP and PCP models.
[5] for models with bend relief, the FFM.●●.130.LC collet nut should be ordered (see page 120).
All dimensions are in millimetres.

These notes also apply to the following page.

C, K and L type collets

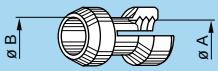

C or K type collet

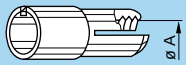

L type collet

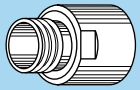

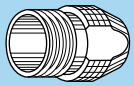

5S

Reference		Collet		Cable ø		Part number of the collet [1]	Part number of the oversize collet and of the split centre-pieces [3]	Part number of the collet nut [3]
Type	ø	ø A	ø B	max.	min.			
C	72	7.2	–	7.0	6.1	FFA.5S.772.CN	–	FFA.5S.130.LC
C	82	8.2	–	8.0	7.1	FFA.5S.782.CN	–	FFA.5S.130.LC
C	92	9.2	–	9.0	8.1	FFA.5S.792.CN	–	FFA.5S.130.LC
C	10	10.2	–	10.0	9.1	FFA.5S.710.CN	–	FFA.5S.130.LC
C	11	11.2	–	11.0	10.1	FFA.5S.711.CN	–	FFA.5S.130.LC
C	12	12.2	–	12.0	11.1	FFA.5S.712.CN	–	FFA.5S.130.LC
C	13	13.2	–	13.0	12.1	FFA.5S.713.CN	–	FFA.5S.130.LC
C	14	14.2	–	14.0	13.1	FFA.5S.714.CN	–	FFA.5S.130.LC
C	15	15.2	–	15.0	14.1	FFA.5S.715.CN	–	FFA.5S.130.LC
C	16	16.2	–	16.0	15.1	FFA.5S.716.CN	–	FFA.5S.130.LC
C	17	17.2	–	17.0	16.1	FFA.5S.717.CN	–	FFA.5S.130.LC
C	18	18.2	–	18.0	17.1	FFA.5S.718.CN	–	FFA.5S.130.LC
C	19	19.2	–	19.0	18.1	FFA.5S.719.CN	–	FFA.5S.130.LC
C	20	20.2	19.7	20.0	19.1	FFA.5S.720.CN	–	FFA.5S.130.LC
C	21	21.2	19.7	21.0	20.1	FFA.5S.721.CN	–	FFA.5S.130.LC
C	22	22.2	19.7	22.0	21.1	FFA.5S.722.CN	–	FFA.5S.130.LC
K	23	23.2	–	23.0	22.1	FFA.6S.723.CN	FFA.5S.137.LCN	FFA.6S.130.LC
K	24	24.2	–	24.0	23.1	FFA.6S.724.CN	FFA.5S.137.LCN	FFA.6S.130.LC
K	25	25.2	–	25.0	24.1	FFA.6S.725.CN	FFA.5S.137.LCN	FFA.6S.130.LC
K	26	26.2	–	26.0	25.1	FFA.6S.726.CN	FFA.5S.137.LCN	FFA.6S.130.LC
K	27	27.2	–	27.0	26.1	FFA.6S.727.CN	FFA.5S.137.LCN	FFA.6S.130.LC
K	28	28.2	27.2	28.0	27.1	FFA.6S.728.CN	FFA.5S.137.LCN	FFA.6S.130.LC
K	29	29.2	27.2	29.0	28.1	FFA.6S.729.CN	FFA.5S.137.LCN	FFA.6S.130.LC
K	30	30.2	27.2	30.0	29.1	FFA.6S.730.CN	FFA.5S.137.LCN	FFA.6S.130.LC
C	72	7.2	–	7.0	6.1	FLA.5S.772.CN [2]	–	FFA.5S.130.LC
C	82	8.2	–	8.0	7.1	FLA.5S.782.CN [2]	–	FFA.5S.130.LC
C	92	9.2	–	9.0	8.1	FLA.5S.792.CN [2]	–	FFA.5S.130.LC
C	10	10.2	–	10.0	9.1	FLA.5S.710.CN [2]	–	FFA.5S.130.LC
C	11	11.2	–	11.0	10.1	FLA.5S.711.CN [2]	–	FFA.5S.130.LC
C	12	12.2	–	12.0	11.1	FLA.5S.712.CN [2]	–	FFA.5S.130.LC
C	13	13.2	–	13.0	12.1	FLA.5S.713.CN [2]	–	FFA.5S.130.LC
C	14	14.2	–	14.0	13.1	FLA.5S.714.CN [2]	–	FFA.5S.130.LC
C	15	15.2	–	15.0	14.1	FLA.5S.715.CN [2]	–	FFA.5S.130.LC
C	16	16.2	–	16.0	15.1	FLA.5S.716.CN [2]	–	FFA.5S.130.LC
C	17	17.2	–	17.0	16.1	FLA.5S.717.CN [2]	–	FFA.5S.130.LC
C	18	18.2	–	18.0	17.1	FLA.5S.718.CN [2]	–	FFA.5S.130.LC
C	19	19.2	–	19.0	18.1	FLA.5S.719.CN [2]	–	FFA.5S.130.LC
C	20	20.2	19.7	20.0	19.1	FLA.5S.720.CN [2]	–	FFA.5S.130.LC
C	21	21.2	19.7	21.0	20.1	FLA.5S.721.CN [2]	–	FFA.5S.130.LC
C	22	22.2	19.7	22.0	21.1	FLA.5S.722.CN [2]	–	FFA.5S.130.LC
L	92	9.2	–	9.0	8.1	FFA.5S.792.LN	–	FFA.5S.130.LC
L	10	10.2	–	10.0	9.1	FFA.5S.710.LN	–	FFA.5S.130.LC
L	11	11.2	–	11.0	10.1	FFA.5S.711.LN	–	FFA.5S.130.LC
L	12	12.2	–	12.0	11.1	FFA.5S.712.LN	–	FFA.5S.130.LC
L	13	13.2	–	13.0	12.1	FFA.5S.713.LN	–	FFA.5S.130.LC
L	14	14.2	–	14.0	13.1	FFA.5S.714.LN	–	FFA.5S.130.LC
L	15	15.2	–	15.0	14.1	FFA.5S.715.LN	–	FFA.5S.130.LC
L	16	16.2	–	16.0	15.1	FFA.5S.716.LN	–	FFA.5S.130.LC
L	17	17.2	–	17.0	16.1	FFA.5S.717.LN	–	FFA.5S.130.LC
L	18	18.2	–	18.0	17.1	FFA.5S.718.LN	–	FFA.5S.130.LC
L	19	19.2	–	19.0	18.1	FFA.5S.719.LN	–	FFA.5S.130.LC
L	20	20.2	–	20.0	19.1	FFA.5S.720.LN	–	FFA.5S.130.LC
L	21	21.2	–	21.0	20.1	FFA.5S.721.LN	–	FFA.5S.130.LC

C and L type collets

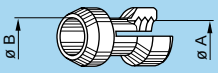

C type collet

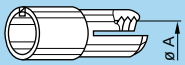

L type collet

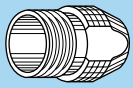

6S

Reference		Collet		Cable ø		Part number of the collet [1]	Part number of the oversize collet and of the split centre-pieces	Part number of the collet nut
Type	ø	ø A	ø B	max.	min.			
C	12	12.2	–	12.0	11.1	FFA.6S.712.CN	–	FFA.6S.130.LC
C	13	13.2	–	13.0	12.1	FFA.6S.713.CN	–	FFA.6S.130.LC
C	14	14.2	–	14.0	13.1	FFA.6S.714.CN	–	FFA.6S.130.LC
C	15	15.2	–	15.0	14.1	FFA.6S.715.CN	–	FFA.6S.130.LC
C	16	16.2	–	16.0	15.1	FFA.6S.716.CN	–	FFA.6S.130.LC
C	17	17.2	–	17.0	16.1	FFA.6S.717.CN	–	FFA.6S.130.LC
C	18	18.2	–	18.0	17.1	FFA.6S.718.CN	–	FFA.6S.130.LC
C	19	19.2	–	19.0	18.1	FFA.6S.719.CN	–	FFA.6S.130.LC
C	20	20.2	–	20.0	19.1	FFA.6S.720.CN	–	FFA.6S.130.LC
C	21	21.2	–	21.0	20.1	FFA.6S.721.CN	–	FFA.6S.130.LC
C	22	22.2	–	22.0	21.1	FFA.6S.722.CN	–	FFA.6S.130.LC
C	23	23.2	–	23.0	22.1	FFA.6S.723.CN	–	FFA.6S.130.LC
C	24	24.2	–	24.0	23.1	FFA.6S.724.CN	–	FFA.6S.130.LC
C	25	25.2	–	25.0	24.1	FFA.6S.725.CN	–	FFA.6S.130.LC
C	26	26.2	–	26.0	25.1	FFA.6S.726.CN	–	FFA.6S.130.LC
C	27	27.2	–	27.0	26.1	FFA.6S.727.CN	–	FFA.6S.130.LC
C	28	28.2	27.2	28.0	27.1	FFA.6S.728.CN	–	FFA.6S.130.LC
C	29	29.2	27.2	29.0	28.1	FFA.6S.729.CN	–	FFA.6S.130.LC
C	30	30.2	27.2	30.0	29.1	FFA.6S.730.CN	–	FFA.6S.130.LC
L	13	12.2	–	12.0	11.1	FFA.6S.712.LN	–	FFA.6S.130.LC
L	14	13.2	–	13.0	12.1	FFA.6S.713.LN	–	FFA.6S.130.LC
L	15	14.2	–	14.0	13.1	FFA.6S.714.LN	–	FFA.6S.130.LC
L	16	15.2	–	15.0	14.1	FFA.6S.715.LN	–	FFA.6S.130.LC
L	17	16.2	–	16.0	15.1	FFA.6S.716.LN	–	FFA.6S.130.LC
L	18	17.2	–	17.0	16.1	FFA.6S.717.LN	–	FFA.6S.130.LC
L	19	18.2	–	18.0	17.1	FFA.6S.718.LN	–	FFA.6S.130.LC
L	20	19.2	–	19.0	18.1	FFA.6S.719.LN	–	FFA.6S.130.LC
L	21	20.2	–	20.0	19.1	FFA.6S.720.LN	–	FFA.6S.130.LC
L	22	21.2	–	21.0	20.1	FFA.6S.721.LN	–	FFA.6S.130.LC
L	23	22.2	–	22.0	21.1	FFA.6S.722.LN	–	FFA.6S.130.LC
L	24	23.2	–	23.0	22.1	FFA.6S.723.LN	–	FFA.6S.130.LC
L	25	24.2	–	24.0	23.1	FFA.6S.724.LN	–	FFA.6S.130.LC
L	26	25.2	–	25.0	24.1	FFA.6S.725.LN	–	FFA.6S.130.LC
L	27	26.2	–	26.0	25.1	FFA.6S.726.LN	–	FFA.6S.130.LC
L	28	27.2	–	27.0	26.1	FFA.6S.727.LN	–	FFA.6S.130.LC
L	29	28.2	–	28.0	27.1	FFA.6S.728.LN	–	FFA.6S.130.LC
L	30	29.2	–	29.0	28.1	FFA.6S.729.LN	–	FFA.6S.130.LC
L	31	30.2	–	30.0	29.1	FFA.6S.730.LN	–	FFA.6S.130.LC

Note:
[1] for ordering collets separately.
All dimensions are in millimetres.

Bend relief nut and bend relief

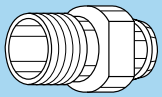

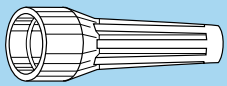

	Reference		Part number of the collet nut	Bend relief to be used [1]
	Type	ø		
00	C	15 to 31	FFM.00.130.LC	GMA.00.0●●.D●
	C	16 to 31	FFM.00.130.LC	GMA.00.0●●.D●
	K	37 to 42	FFM.0S.130.LC	GMA.0B.0●●.D●
	L	17 to 31	FFM.00.130.LC	GMA.00.0●●.D●
0S	C	27 to 42	FFM.0S.130.LC	GMA.0B.0●●.D●
	K	47 to 62	FFM.1S.130.LC	GMA.1B.0●●.D●
	L	27 to 42	FFM.0S.130.LC	GMA.0B.0●●.D●
1S	C	27 to 62	FFM.1S.130.LC	GMA.1B.0●●.D●
	K	72 to 82	FFM.2S.130.LC	GMA.2B.0●●.D●
	L	27 to 62	FFM.1S.130.LC	GMA.1B.0●●.D●
2S	C	42 to 82	FFM.2S.130.LC	GMA.2B.0●●.D●
	K	92 to 10	FFM.3S.130.LC	GMA.3B.0●●.D●
	L	42 to 82	FFM.2S.130.LC	GMA.2B.0●●.D●
3S	C	52 to 10	FFM.3S.130.LC	GMA.3B.0●●.D●
	K	12 to 13	FFM.4S.130.LC	GMA.4B.0●●.D●
	L	52 to 10	FFM.3S.130.LC	GMA.3B.0●●.D●
4S	C	82 to 13	FFM.4S.130.LC	GMA.4B.0●●.D●
	L	82 to 13	FFM.4S.130.LC	GMA.4B.0●●.D●

Note: [1] the bend relief is to be ordered separately (see pages 175 and 176).

C and K type collets

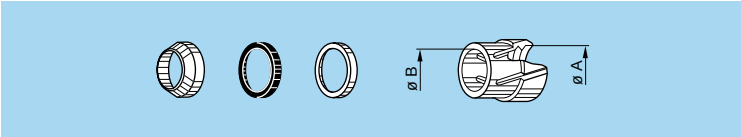

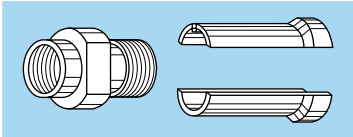

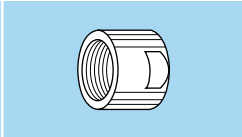

	Reference		Collet		Cable ø		Part number of the collet system [1]	Part number of the oversize collet and of the split centre-pieces [2]	Part number of the collet nut [2]
	Type	ø	ø A	ø B	max.	min.			
0E	C	10	1.6	–	1.2	1.0	FFA.0E.710.CNS	–	FFA.00.130.LC
	C	15	1.6	–	1.5	1.3	FFA.0E.715.CNS	–	FFA.00.130.LC
	C	20	2.1	–	2.0	1.6	FFA.0E.720.CNS	–	FFA.00.130.LC
	C	25	3.1	–	2.5	2.1	FFA.0E.725.CNS	–	FFA.00.130.LC
	C	30	3.1	–	3.0	2.6	FFA.0E.730.CNS	–	FFA.00.130.LC
	C	35	4.2	4.2	3.5	3.1	FFA.0E.735.CNS	–	FFA.00.130.LC
	C	40	4.2	4.2	4.0	3.6	FFA.0E.740.CNS	–	FFA.00.130.LC
	C	45	5.2	5.2	4.5	4.1	FFA.0E.745.CNS	–	FFA.00.130.LC
	C	50	5.2	5.2	5.0	4.6	FFA.0E.750.CNS	–	FFA.00.130.LC
1E	C	15	1.6	–	1.5	1.3	FFA.1E.715.CNS	–	FFA.1E.130.LC
	C	20	2.2	–	2.0	1.6	FFA.1E.720.CNS	–	FFA.1E.130.LC
	C	25	3.2	–	2.5	2.1	FFA.1E.725.CNS	–	FFA.1E.130.LC
	C	30	3.2	–	3.0	2.6	FFA.1E.730.CNS	–	FFA.1E.130.LC
	C	35	4.2	–	3.5	3.1	FFA.1E.735.CNS	–	FFA.1E.130.LC
	C	40	4.2	–	4.0	3.6	FFA.1E.740.CNS	–	FFA.1E.130.LC
	C	45	5.2	–	4.5	4.1	FFA.1E.745.CNS	–	FFA.1E.130.LC
	C	50	5.2	–	5.0	4.6	FFA.1E.750.CNS	–	FFA.1E.130.LC
	C	55	6.2	6.2	5.5	5.1	FFA.1E.755.CNS	–	FFA.1E.130.LC
	C	60	6.2	6.2	6.0	5.6	FFA.1E.760.CNS	–	FFA.1E.130.LC
	C	65	7.2	6.7	6.5	6.1	FFA.1E.765.CNS	–	FFA.1E.130.LC
	K	70	7.2	–	7.0	6.6	FFA.2E.770.CNS	FFA.1E.137.LCN	FFA.2E.130.LC
	K	75	8.2	8.2	7.5	7.1	FFA.2E.775.CNS	FFA.1E.137.LCN	FFA.2E.130.LC
	K	80	8.2	8.2	8.0	7.6	FFA.2E.780.CNS	FFA.1E.137.LCN	FFA.2E.130.LC
	K	85	9.2	8.6	8.5	8.1	FFA.2E.785.CNS	FFA.1E.137.LCN	FFA.2E.130.LC
2E	C	15	2.2	–	1.5	1.3	FFA.2E.715.CNS	–	FFA.2E.130.LC
	C	20	2.2	–	2.0	1.6	FFA.2E.720.CNS	–	FFA.2E.130.LC
	C	25	3.2	–	2.5	2.1	FFA.2E.725.CNS	–	FFA.2E.130.LC
	C	30	3.2	–	3.0	2.6	FFA.2E.730.CNS	–	FFA.2E.130.LC
	C	35	4.2	–	3.5	3.1	FFA.2E.735.CNS	–	FFA.2E.130.LC
	C	40	4.2	–	4.0	3.6	FFA.2E.740.CNS	–	FFA.2E.130.LC
	C	45	5.2	–	4.5	4.1	FFA.2E.745.CNS	–	FFA.2E.130.LC
	C	50	5.2	–	5.0	4.6	FFA.2E.750.CNS	–	FFA.2E.130.LC
	C	55	6.2	–	5.5	5.1	FFA.2E.755.CNS	–	FFA.2E.130.LC
	C	60	6.2	–	6.0	5.6	FFA.2E.760.CNS	–	FFA.2E.130.LC
	C	65	7.2	–	6.5	6.1	FFA.2E.765.CNS	–	FFA.2E.130.LC
	C	70	7.2	–	7.0	6.6	FFA.2E.770.CNS	–	FFA.2E.130.LC
	C	75	8.2	8.2	7.5	7.1	FFA.2E.775.CNS	–	FFA.2E.130.LC
	C	80	8.2	8.2	8.0	7.6	FFA.2E.780.CNS	–	FFA.2E.130.LC
	C	85	9.2	8.6	8.5	8.1	FFA.2E.785.CNS	–	FFA.2E.130.LC
	K	90	9.2	–	9.0	8.6	FFA.3E.790.CNS	FFA.2E.137.LCN	FFA.3E.130.LC
	K	95	10.2	10.2	9.5	9.1	FFA.3E.795.CNS	FFA.2E.137.LCN	FFA.3E.130.LC
	K	10	10.2	10.2	10.0	9.6	FFA.3E.710.CNS	FFA.2E.137.LCN	FFA.3E.130.LC
	K	11	11.2	10.6	11.0	10.1	FFA.3E.711.CNS	FFA.2E.137.LCN	FFA.3E.130.LC

Note:
[1] for ordering the collet system separately.
[2] for ordering a K type collet separately, the oversize collet and the corresponding collet nut should also be ordered.
All dimensions are in millimetres.

C and K type collets

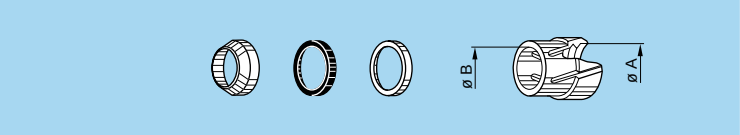

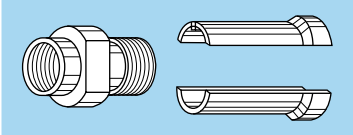
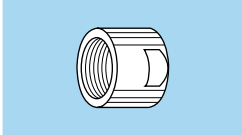

	Reference		Collet		Cable ø		Part number of the collet system [1]	Part number of the oversize collet and of the split centre-pieces [2]	Part number of the collet nut [2]
	Type	ø	ø A	ø B	max.	min.			
3E	C	30	3.2	–	3.0	2.6	FFA.3E.730.CNS	–	FFA.3E.130.LC
	C	35	4.2	–	3.5	3.1	FFA.3E.735.CNS	–	FFA.3E.130.LC
	C	40	4.2	–	4.0	3.6	FFA.3E.740.CNS	–	FFA.3E.130.LC
	C	45	5.2	–	4.5	4.1	FFA.3E.745.CNS	–	FFA.3E.130.LC
	C	50	5.2	–	5.0	4.6	FFA.3E.750.CNS	–	FFA.3E.130.LC
	C	55	6.2	–	5.5	5.1	FFA.3E.755.CNS	–	FFA.3E.130.LC
	C	60	6.2	–	6.0	5.6	FFA.3E.760.CNS	–	FFA.3E.130.LC
	C	65	7.2	–	6.5	6.1	FFA.3E.765.CNS	–	FFA.3E.130.LC
	C	70	7.2	–	7.0	6.6	FFA.3E.770.CNS	–	FFA.3E.130.LC
	C	75	8.2	–	7.5	7.1	FFA.3E.775.CNS	–	FFA.3E.130.LC
	C	80	8.2	–	8.0	7.6	FFA.3E.780.CNS	–	FFA.3E.130.LC
	C	85	9.2	–	8.5	8.1	FFA.3E.785.CNS	–	FFA.3E.130.LC
	C	90	9.2	–	9.0	8.6	FFA.3E.790.CNS	–	FFA.3E.130.LC
	C	95	10.2	10.2	9.5	9.1	FFA.3E.795.CNS	–	FFA.3E.130.LC
	C	10	10.2	10.2	10.0	9.6	FFA.3E.710.CNS	–	FFA.3E.130.LC
	C	11	11.2	11.2	11.0	10.1	FFA.3E.711.CNS	–	FFA.3E.130.LC
	K	11	12.3	–	12.0	10.6	FFA.4E.711.CNS	FFA.3E.137.LCN	FFA.4E.130.LC
	K	12	13.8	13.8	12.8	12.1	FFA.4E.712.CNS	FFA.3E.137.LCN	FFA.4E.130.LC
	K	13	13.8	13.8	13.5	12.9	FFA.4E.713.CNS	FFA.3E.137.LCN	FFA.4E.130.LC
	K	14	15.3	15.3	14.0	13.6	FFA.4E.714.CNS	FFA.3E.137.LCN	FFA.4E.130.LC
	K	15	15.3	15.3	15.0	14.1	FFA.4E.715.CNS	FFA.3E.137.LCN	FFA.4E.130.LC
4E	C	50	6.3	–	5.0	4.6	FFA.4E.750.CNS	–	FFA.4E.130.LC
	C	55	6.3	–	5.5	5.1	FFA.4E.755.CNS	–	FFA.4E.130.LC
	C	60	6.3	–	6.0	5.6	FFA.4E.760.CNS	–	FFA.4E.130.LC
	C	65	7.3	–	6.5	6.1	FFA.4E.765.CNS	–	FFA.4E.130.LC
	C	70	7.3	–	7.0	6.6	FFA.4E.770.CNS	–	FFA.4E.130.LC
	C	75	8.3	–	7.5	7.1	FFA.4E.775.CNS	–	FFA.4E.130.LC
	C	80	8.3	–	8.0	7.6	FFA.4E.780.CNS	–	FFA.4E.130.LC
	C	85	9.3	–	8.5	8.1	FFA.4E.785.CNS	–	FFA.4E.130.LC
	C	90	9.3	–	9.0	8.6	FFA.4E.790.CNS	–	FFA.4E.130.LC
	C	95	10.8	–	9.5	9.1	FFA.4E.795.CNS	–	FFA.4E.130.LC
	C	10	10.8	–	10.5	9.6	FFA.4E.710.CNS	–	FFA.4E.130.LC
	C	11	12.3	–	12.0	10.6	FFA.4E.711.CNS	–	FFA.4E.130.LC
	C	12	13.8	13.8	12.8	12.1	FFA.4E.712.CNS	–	FFA.4E.130.LC
	C	13	13.8	13.8	13.5	12.9	FFA.4E.713.CNS	–	FFA.4E.130.LC
	C	14	15.3	15.3	14.0	13.6	FFA.4E.714.CNS	–	FFA.4E.130.LC
	C	15	15.3	15.3	15.0	14.1	FFA.4E.715.CNS	–	FFA.4E.130.LC
	K	16	17.8	–	16.5	15.6	FFA.4K.716.CNS	FFA.4E.137.LCN [3]	FFA.4K.136.LC
	K	17	17.8	–	17.5	16.6	FFA.4K.717.CNS	FFA.4E.137.LCN	FFA.4K.136.LC
	K	18	19.8	–	18.5	17.6	FFA.4K.718.CNS	FFA.4E.137.LCN	FFA.4K.136.LC
	K	19	19.8	–	19.5	18.6	FFA.4K.719.CNS	FFA.4E.137.LCN	FFA.4K.136.LC
	K	20	21.8	–	20.5	19.6	FFA.4K.720.CNS	FFA.4E.137.LCN	FFA.4K.136.LC
	K	21	21.8	–	21.5	20.6	FFA.4K.721.CNS	FFA.4E.137.LCN	FFA.4K.136.LC
	K	22	23.8	23.8	22.5	21.6	FFA.4K.722.CNS	FFA.4E.137.LCN	FFA.4K.136.LC
	K	23	23.8	23.8	23.5	22.6	FFA.4K.723.CNS	FFA.4E.137.LCN	FFA.4K.136.LC

Note:
[1] for ordering the collet system separately.
[2] for ordering a K type collet separately, the oversize collet and the corresponding collet nut should also be ordered.
[3] in 4E series, the centre-piece is made of one piece.

All dimensions are in millimetres.

C type collets

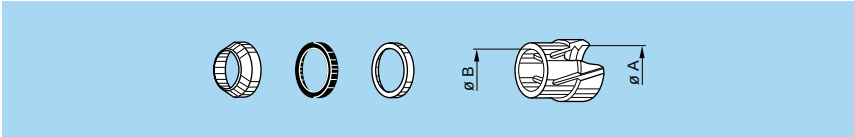

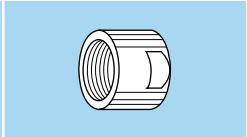

	Reference		Collet		Cable ø		Part number of the collet system [1]	Part number of the collet nut
	Type	ø	ø A	ø B	max.	min.		
5E	C	10	11.8	–	10.5	9.6	FFA.5K.710.CNS	FFA.5K.130.LC
	C	11	11.8	–	11.5	10.6	FFA.5K.711.CNS	FFA.5K.130.LC
	C	12	13.8	–	12.5	11.6	FFA.5K.712.CNS	FFA.5K.130.LC
	C	13	13.8	–	13.5	12.6	FFA.5K.713.CNS	FFA.5K.130.LC
	C	14	15.8	–	14.5	13.6	FFA.5K.714.CNS	FFA.5K.130.LC
	C	15	15.8	–	15.5	14.6	FFA.5K.715.CNS	FFA.5K.130.LC
	C	16	17.8	–	16.5	15.6	FFA.5K.716.CNS	FFA.5K.130.LC
	C	17	17.8	–	17.5	16.6	FFA.5K.717.CNS	FFA.5K.130.LC
	C	18	19.8	–	18.5	17.6	FFA.5K.718.CNS	FFA.5K.130.LC
	C	19	19.8	–	19.5	18.6	FFA.5K.719.CNS	FFA.5K.130.LC
	C	20	21.8	–	20.5	19.6	FFA.5K.720.CNS	FFA.5K.130.LC
	C	21	21.8	–	21.5	20.6	FFA.5K.721.CNS	FFA.5K.130.LC
	C	22	23.8	23.8	22.5	21.6	FFA.5K.722.CNS	FFA.5K.130.LC
	C	23	23.8	23.8	23.5	22.6	FFA.5K.723.CNS	FFA.5K.130.LC
6E	C	14	14.2	–	14.0	13.0	FFA.6E.714.CNS	FGG.6E.130.LC
	C	15	15.2	–	15.0	14.1	FFA.6E.715.CNS	FGG.6E.131.LC
	C	16	15.7	–	15.5	14.6	FFA.6E.716.CNS	PKG.6E.131.LC
	C	17	16.7	–	16.5	15.6	FFA.6E.717.CNS	PKG.6E.132.LC
	C	18	18.2	–	18.0	17.1	FFA.6E.718.CNS	FGG.6E.132.LC
	C	21	23.2	–	21.5	20.6	FFA.6E.721.CNS	FGG.6E.133.LC
	C	22	23.2	–	22.0	21.1	FFA.6E.722.CNS	PKG.6E.133.LC
	C	23	23.2	–	23.0	22.1	FFA.6E.723.CNS	FGG.6E.134.LC
	C	27	27.2	–	27.0	26.1	FFA.6E.727.CNS	FGG.6E.135.LC
	C	30	30.2	–	30.0	29.5	FFA.6E.730.CNS	FGG.6E.136.LC

Note: [1] for ordering the collet system separately.

Bend relief nut and bend relief

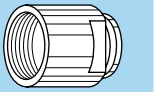

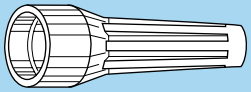

	Reference		Part number of the collet nut	Bend relief to be used [1]
	Type	ø		
0E	C	10 to 50	FFM.0E.130.LC	GMA.0B.●●●.●●
1E	C	15 to 65	FFM.1E.130.LC	GMA.1B.●●●.●●
	K	70 to 85	FFM.2E.130.LC	GMA.2B.●●●.●●
2E	C	15 to 85	FFM.2E.130.LC	GMA.2B.●●●.●●
	K	90 to 11	FFM.3E.130.LC	GMA.3B.●●●.●●
3E	C	30 to 10	FFM.3E.130.LC	GMA.3B.●●●.●●
	K	11 to 15	FFM.4E.130.LC	GMA.4B.●●●.●●
4E	C	50 to 15	FFM.4E.130.LC	GMA.4B.●●●.●●

Note: [1] the bend relief is to be ordered separately (see pages 175 and 176).
All dimensions are in millimetres.

Variant (S and E series)

Anodized colour

The «variant» position of the reference is used to specify the anodized colour according to the table below.

Part number for connector with standard collet nut

Ref.	Anodized colour
A	blue
J	yellow
N	black

Ref.	Anodized colour
R	red
T	natural
V	green

Part number for connector with bend relief backnut

Ref.	Anodized colour
L	black
X	natural

Note: other anodizing colours are available for connectors with bend relief backnut. Please consult us.

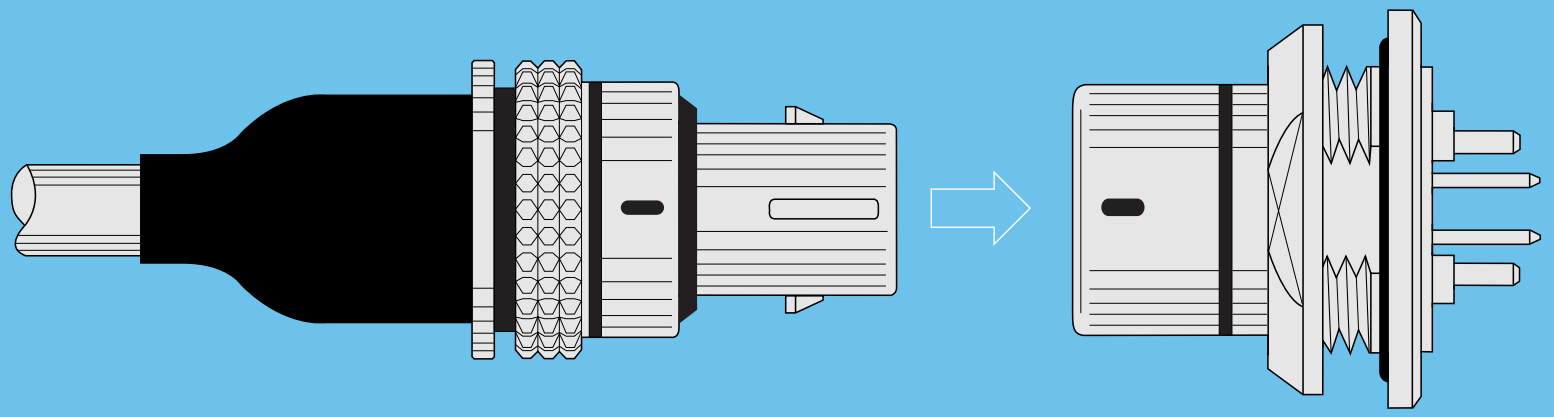

F SERIES (watertight)

F Series

F series connectors have been specially developed to meet the most demanding requirements in terms of dimensions, weight and watertightness.
This series provides customers with many features and benefits including:
– push-pull self-latching system for safe connection
– sealed to IP67 for environmental protection when mated according to IEC 60529
– compact scoop-proof design and use of aluminium alloys
– high shock and vibration resistance
– multipole types with 2 to 66 contacts
– crimp or print contacts
– keys ensuring ease of blind mating
– colour coded key options for system security

Interconnections

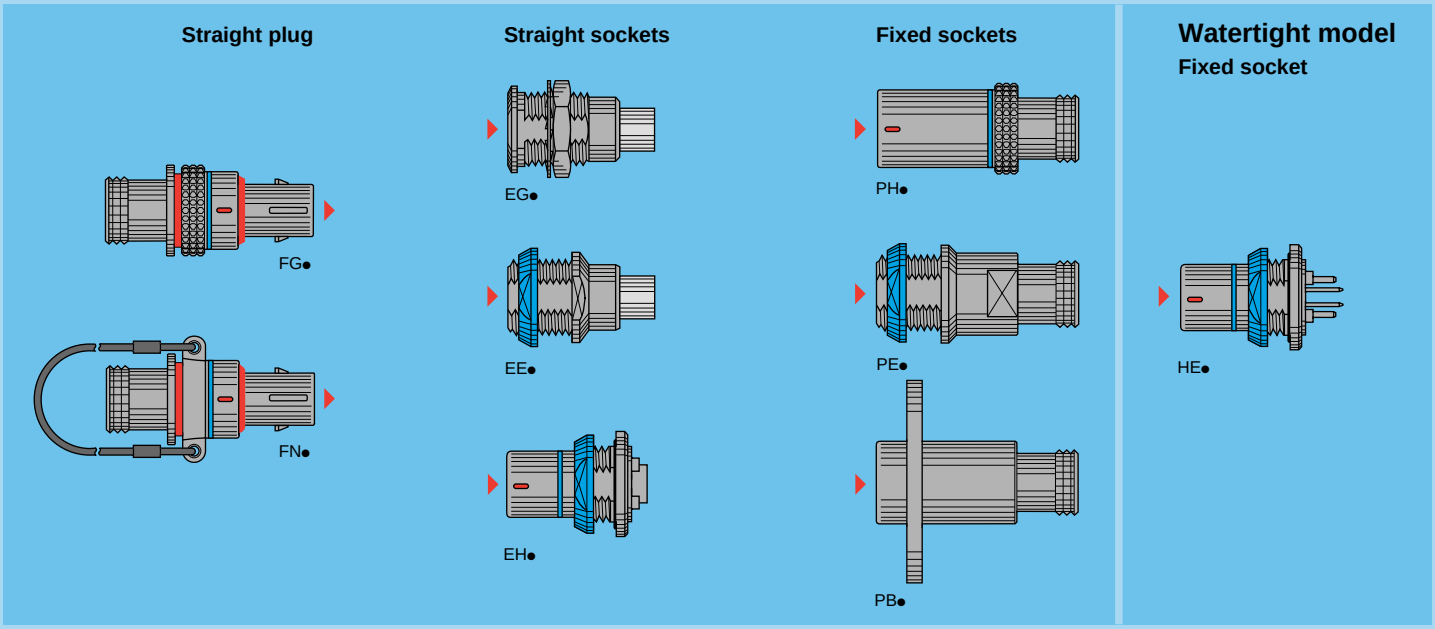

Model Description

EE• Fixed socket, nut fixing, with keys (N, P, S or T), (back panel mounting)
EG• Fixed socket, nut fixing, with keys (N, P, S or T)
EH• Fixed socket, nut fixing, with keys (N, P, S, T, W or X) (back panel mounting) for printed circuits
FG• Straight plug with keys (N, P, S, T, W or X)
FN• Straight plug with keys (N, P or S) and lanyard release
HE• Fixed socket, nut fixing, for printed circuit, with keys (N, P, S, T, W or X), (back panel mounting)
PB• Straight socket with flange with keys (N, P, S, T, W or X), 2 holes fixing
PE• Straight socket, nut fixing, with keys (N, P, S, T, W or X), (back panel mounting)
PH• Straight socket with keys (N, P, S, T, W or X)

Part Section Showing Internal Components

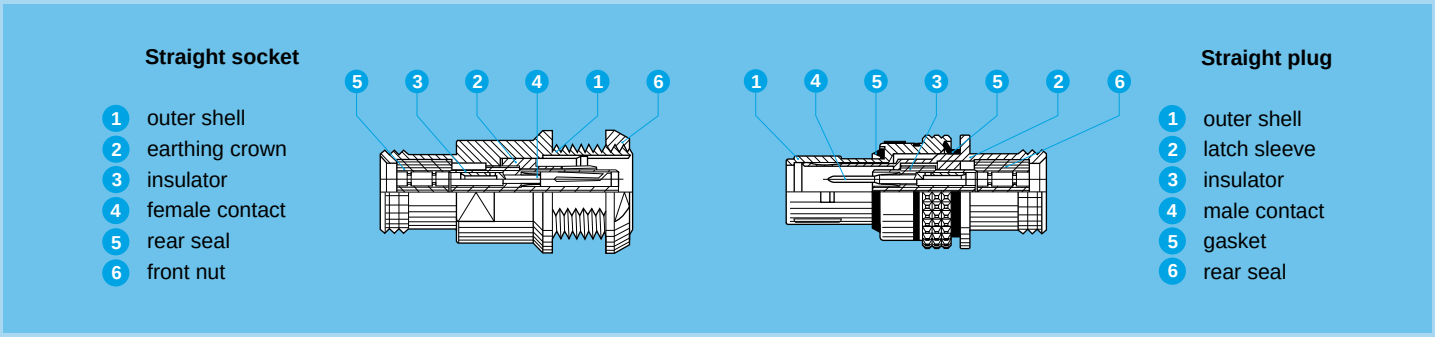

Technical Characteristics

Mechanical and Climatical

Characteristics	Value	Standard
Endurance	> 1000 cycles	IEC 60512-5 test 9a
Humidity	up to 95% to 60° C	
Operating temperature[1)]	-15° C, +200° C	
Vibration resistance	10-2000 Hz, 15 g	IEC 60512-4 test 6d
Shock resistance	100 g, 6 ms	IEC 60512-4 test 6c
Protection index (mated)	IP67	IEC 60529
Climatical category	15/200/21	IEC 60068-1

Note: [1)] for the HEN model, operating temperature ranges from -15°C to +80°C.

Available Models (series and types)

Model	Multipole					
	0F	1F	2F	3F	4F	5F
EEN	●	●	●	●		
EEP	●	●	●	●		
EES	●	●	●	●		
EET				●		
EGN	●	●	●	●		
EGP	●	●	●	●		
EGS	●	●	●	●		
EGT				●		
EHN	●	●	●	●		
EHP	●	●	●	●		
EHS	●	●	●	●		
EHT				●		
EHW					●	●
EHX					●	●
FGN	●	●	●	●		
FGP	●	●	●	●		

Model	Multipole					
	0F	1F	2F	3F	4F	5F
FGS	●	●	●	●		
FGT				●		
FGW					●	●
FGX					●	●
FNN		●				
FNP		●				
FNS		●				
HEN	●	●	●	●		
HEP	●	●	●	●		
HES	●	●	●	●		
HET				●		
HEW					●	●
HEX					●	●
PBN	●	●	●	●		
PBP	●	●	●	●		
PBS	●	●	●	●		

Model	Multipole					
	0F	1F	2F	3F	4F	5F
PBT				●		
PBW					●	●
PBX					●	●
PEN	●	●	●	●		
PEP	●	●	●	●		
PES	●	●	●	●		
PET				●		
PEW					●	●
PEX					●	●
PHN	●	●	●	●		
PHP	●	●	●	●		
PHS	●	●	●	●		
PHT				●		
PHW					●	●
PHX					●	●

Note: ● = available models by series and types

Polarized Keying System

F series connector model part numbers are composed of three letters. The LAST LETTER indicates the keys corresponding to a particular contact type.
For example, straight plugs with N, P or W keys, are fitted with male contacts; whereas with S, T or X keys, plugs are fitted with female contacts.
Sockets with N, P or W keys, are fitted with female contacts; whereas with S, T or X keys, sockets are fitted with male contacts.

Front view of a socket

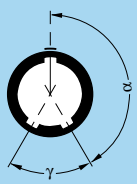

Model	Nb of keys	Series 0F to 2F Angles α	Series 0F to 2F Angles γ	Series 3F Angles α	Series 3F Angles γ	Colour code	Contact type Plug	Contact type Socket	Note
●●N	3	165°	30°	150°	60°	blue	male	female	●
●●P		150°	60°	145°	70°	yellow	male	female	○
●●S		155°	50°	140°	80°	red	female	male	○
●●T		–	–	135°	90°	green	female	male	○

Front view of a socket

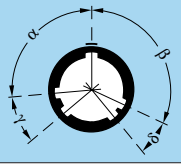

Model	Nb of keys	Series 4F-5F Angles α	Series 4F-5F Angles β	Series 4F-5F Angles γ	Series 4F-5F Angles δ	Colour code	Contact type Plug	Contact type Socket	Note
●●W	5	95°	115°	35°	25°	blue	male	female	●
●● X		100°	125°	40°	20°	red	female	male	○

● First choice alternative ○ Special order alternative

Part Number Example

Straight plug

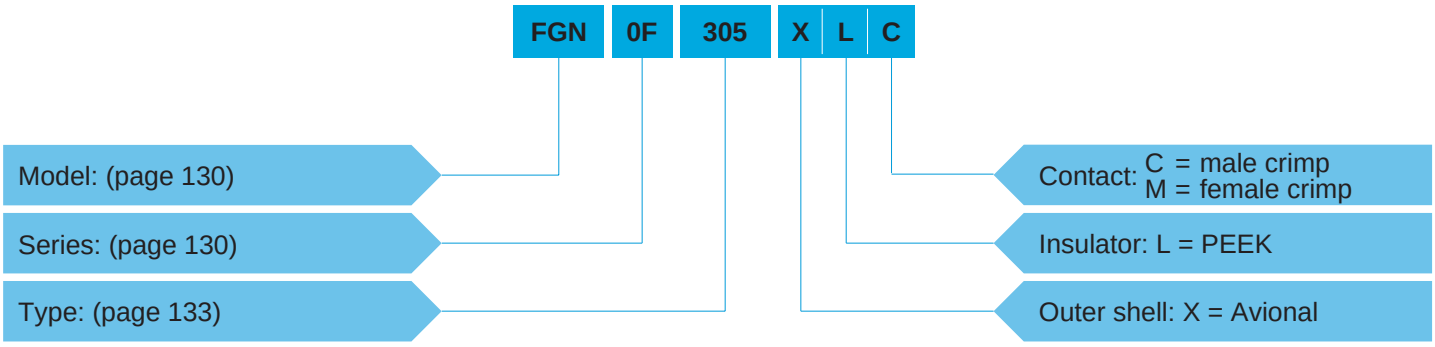

FGN.0F.305.XLC = straight plug with key (code N), 0F series, multipole with 5 contacts, Avional outer shell, PEEK insulator, male crimp contacts.

Straight socket

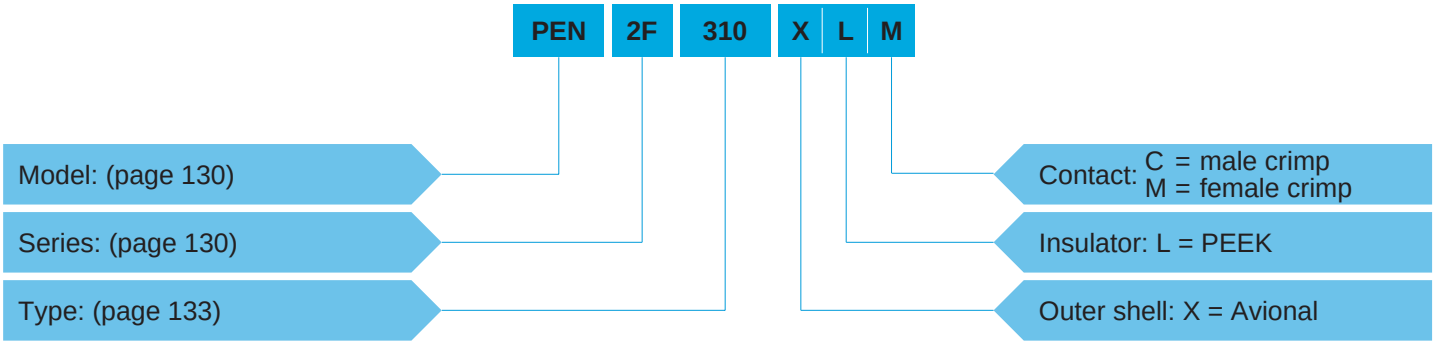

PEN.2F.310.XLM = straight socket with key (code N), (back panel mounting), 2F series, multipole with 10 contacts, Avional outer shell, PEEK insulator, female crimp contacts.

Fixed socket

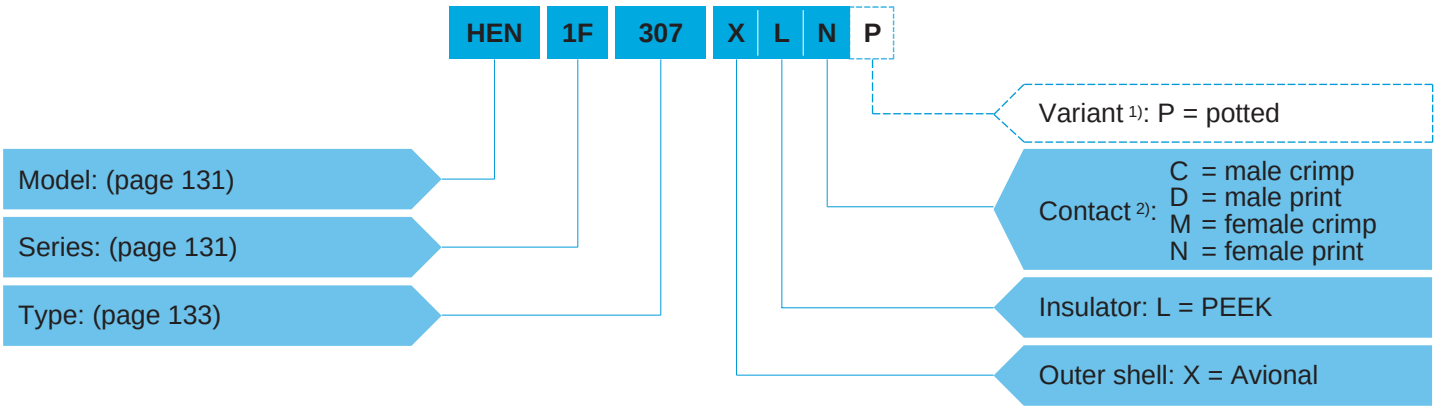

HEN.1F.307.XLNP = fixed socket, nut fixing for printed circuit, key (code N), (back panel mounting), watertight, 1F series, multipole with 7 contacts, Avional outer shell, PEEK insulator, female print contacts.

Note: 1) potting for HE● only.
2) HE● available only in male or female to print.

Models - Series

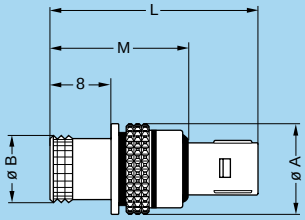

FG● Straight plug with keys (N, P, S, T, W or X)

Reference		Dimensions (mm)			
Model	Series	A	B	L	M
FG●	0F	12	9.0	27.5	18.0
FG●	1F	14	10.7	27.5	18.1
FG●	2F	17	14.0	27.5	18.2
FG●	3F	19	16.0	27.5	18.2
FGW	4F	26	21.2	30.0	20.8
FGX[1)]	4F	26	21.2	30.7	20.8
FGW	5F	35	30.2	30.0	20.8
FGX	5F	35	30.2	30.0	20.8

Note: [1)] the L length of this model is special.

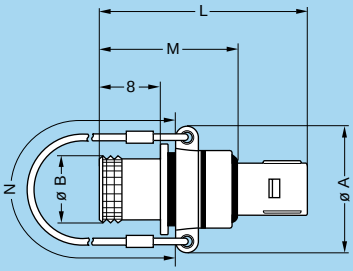

FN● Straight plug with keys (N, P or S) and lanyard release

Reference		Dimensions (mm)				
Model	Series	A	B	L	M	N
FN●	1F	19.3	10.7	27.5	18.1	140

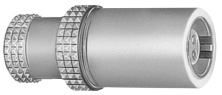

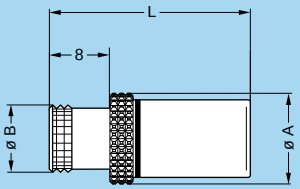

PH● Straight socket with keys (N, P, S, T, W or X)

Reference		Dim. (mm)		
Model	Series	A	B	L
PH●	0F	12	9.0	26.7
PH●	1F	14	10.7	26.7
PH●	2F	17	14.0	26.7
PH●	3F	19	16.0	26.7
PHS[1)]	3F	19	16.0	28.1
PHT[1)]	3F	19	16.0	28.1
PHW	4F	26	21.2	26.7
PHX[1)]	4F	26	21.2	29.0
PHW	5F	35	30.2	36.6
PHX	5F	35	30.2	36.6

Note: [1)] the L length of these models is special.

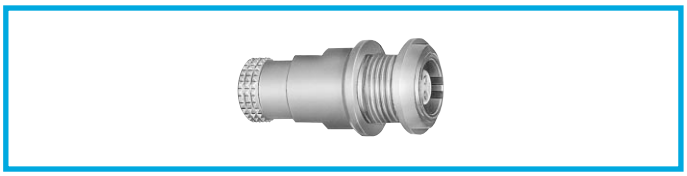

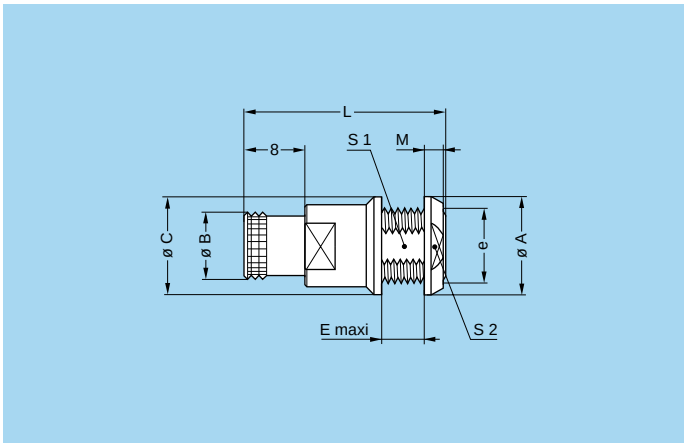

PE● Straight socket, nut fixing, with keys (N, P, S, T, W or X), (back panel mounting)

Reference		Dimensions (mm)								
Model	Series	A	B	C	e	E	L	M	S1	S2
PE●	0F	13	9.0	13	M10x0.75	6.0	26.7	2.5	9.0	11
PE●	1F	17	10.7	17	M13x0.75	6.2	26.7	3.2	11.5	14
PE●	2F	20	14.0	20	M16x1.00	6.4	26.7	4.0	14.5	17
PE●	3F	22	16.0	22	M18x1.00	6.4	26.7	4.0	16.5	19
PES[1)]	3F	22	16.0	22	M18x1.00	6.4	28.1	4.0	16.5	19
PET[1)]	3F	22	16.0	22	M18x1.00	6.4	28.1	4.0	16.5	19
PEW	4F	29	21.2	29	M24x1.00	6.4	26.7	5.0	22.0	25
PEX[1)]	4F	29	21.2	29	M24x1.00	6.4	29.0	5.0	22.0	25
PEW	5F	38	30.2	38	M33x1.00	6.4	36.6	5.0	31.0	34
PEX	5F	38	30.2	38	M33x1.00	6.4	36.6	5.0	31.0	34

Panel cut-out (page 138)

Note: [1)] the L length of these models is special.

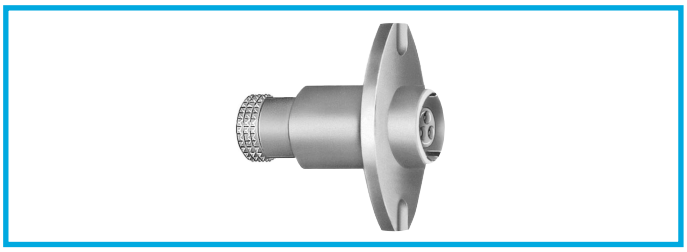

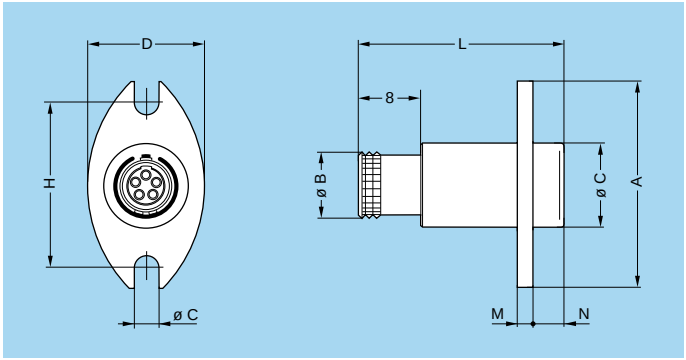

PB● Straight socket with flange with keys (N, P, S, T, W or X), 2 holes fixing

Reference		Dimensions (mm)								
Model	Series	A	B	C	d	D	H	L	M	N
PB●	0F	27	3.2	11	9.0	15	21.4	26.7	2	4
PB●	1F	27	3.2	13	10.7	15	21.4	26.7	2	4
PB●	2F	32	3.2	16	14.0	18	25.9	26.7	2	4
PB●	3F	38	3.2	18	16.0	20	29.0	26.7	2	4
PBS[1)]	3F	38	3.2	18	16.0	20	29.0	28.1	2	4
PBT[1)]	3F	38	3.2	18	16.0	20	29.0	28.1	2	4
PBW	4F	41	3.2	23	21.2	26	32.0	26.7	2	4
PBX[1)]	4F	41	3.2	23	21.2	26	32.0	29.0	2	4
PBW	5F	44	3.2	23	30.2	33	38.2	36.6	2	4
PBX	5F	44	3.2	23	30.2	33	38.2	36.6	2	4

Panel cut-out (page 138)

Note: [1)] the L length of these models is special.

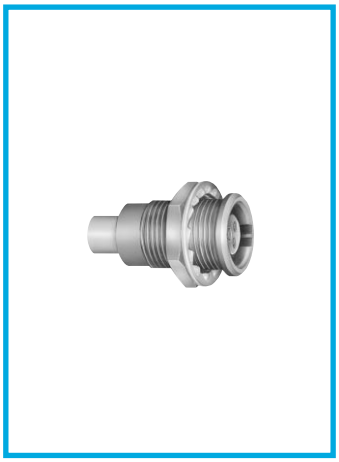

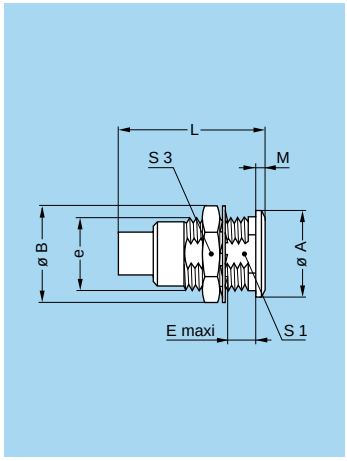

EG● Fixed socket, nut fixing, with keys (N, P, S or T)

Reference		Dimensions (mm)							
Model	Series	A	B	e	E	L	M	S1	S3
EG●	0F	10	12.5	M9x0.6	7	19.0	1.2	8.2	11
EG●	1F	14	16.0	M12x1.0	7	19.0	1.5	10.5	14
EG●	2F	18	19.5	M15x1.0	6	19.0	1.8	13.5	17
EG●	3F	22	25.2	M18x1.0	5	19.0	2.0	16.5	22
EGS[1)]	3F	22	25.2	M18x1.0	5	20.5	2.0	16.5	22
EGT[1)]	3F	22	25.2	M18x1.0	5	20.5	2.0	16.5	22

Panel cut-out (page 138)

Note: [1)] the L length of this model is special.

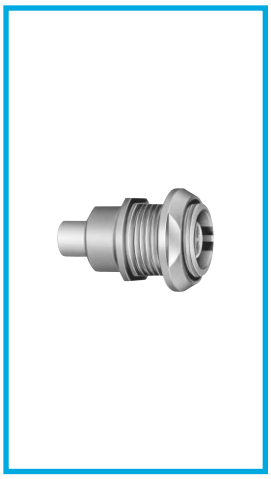

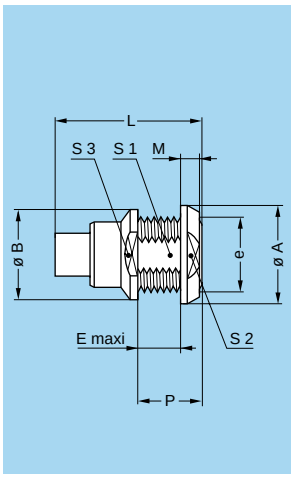

EE● Fixed socket, nut fixing, with keys (N, P, S or T), (back panel mounting)

Reference		Dimensions (mm)									
Model	Series	A	B	e	E	L	M	P	S1	S2	S3
EE●	0F	13	12	M10x0.75	6.0	19.0	2.5	8.5	9.0	11	10.5
EE●	1F	17	15	M13x0.75	6.2	19.0	3.2	9.4	11.5	14	14.0
EE●	2F	20	19	M16x1.00	6.4	19.0	4.0	10.4	14.5	17	16.0
EE●	3F	22	22	M18x1.00	6.4	19.0	4.0	10.4	16.5	19	20.0
EES[1)]	3F	22	22	M18x1.00	6.4	20.5	4.0	10.4	16.5	19	20.0
EET[1)]	3F	22	22	M18x1.00	6.4	20.5	4.0	10.4	16.5	19	20.0

Panel cut-out (page 138)

Note: [1)] the L length of this model is special.

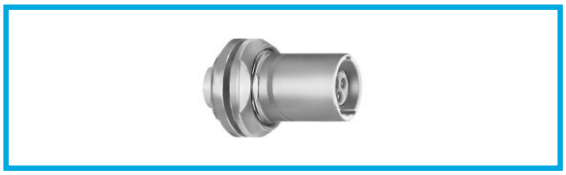

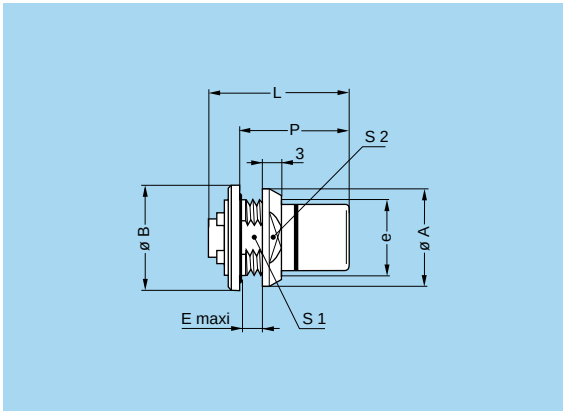

EH● Fixed socket, nut fixing, with keys (N, P, S, T, W or X), (back panel mounting) (printed circuit mounting possible)

Reference		Dimensions (mm)									
Model	Series	A	B	e	E	H	L[2)]	M	P	S1	S2
EH●	0F	13	14	M10x0.75	3.0	5.08	21.6	2.5	14.5	9.0	11
EH●	1F	17	17	M13x0.75	3.0	7.62	21.6	3.2	14.5	11.5	14
EH●	2F	20	20	M16x1.00	3.0	8.89	21.6	4.0	14.5	14.5	17
EH●	3F	22	23	M18x1.00	3.0	11.43	21.6	4.0	14.5	16.5	19
EHS[1)]	3F	22	23	M18x1.00	3.0	11.43	22.1	4.0	16.0	16.5	19
EHT[1)]	3F	22	23	M18x1.00	3.0	11.43	22.1	4.0	16.0	16.5	19
EHW	4F	29	29	M24x1.00	3.0	15.24	21.6	5.0	14.5	22.0	25
EHX[1)]	4F	29	29	M24x1.00	3.0	15.24	22.8	5.0	15.2	22.0	25
EHW	5F	38	38	M33x1.00	6.4	20.32	21.6	5.0	23.9	31.0	34
EHX[1)]	5F	38	38	M33x1.00	6.4	20.32	30.4	5.0	23.9	31.0	34

Panel cut-out (page 138)

Note: [1)] the L length of these models is special.
[2)] in printed circuit version these dimensions are identical with the HEN model.

Watertight model

HEN fixed sockets allow the device on which they are fitted to reach a protection index of IP68 as per IEC 60529 (unmated). They are fully compatible with all non-watertight models of the same series.

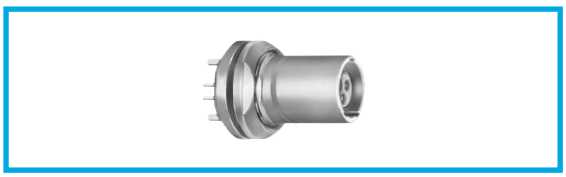

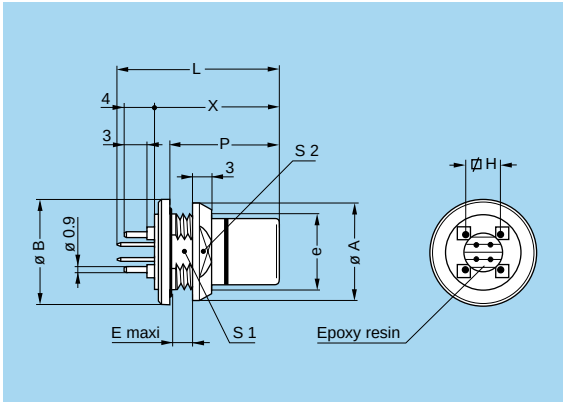

HE● Fixed socket, nut fixing, for printed circuit, with keys (N, P, S, T, W or X), (back panel mounting)

Reference		Dimensions (mm)										
Model	Series	A	B	e	E	H	L	M	P	S1	S2	X
HE●	0F	13	14	M10x0.75	3.0	5.08	21.6	2.5	14.5	9.0	11	16.5
HE●	1F	17	17	M13x0.75	3.0	7.62	21.6	3.2	14.5	11.5	14	16.5
HE●	2F	20	20	M16x1.00	3.0	8.89	21.6	4.0	14.5	14.5	17	16.5
HE●	3F	22	23	M18x1.00	3.0	11.43	21.6	4.0	14.5	16.5	19	16.5
HES[1)]	3F	22	23	M18x1.00	3.0	11.43	22.1	4.0	16.0	16.5	19	18.0
HET[1)]	3F	22	23	M18x1.00	3.0	11.43	22.1	4.0	16.0	16.5	19	18.0
HEW	4F	29	29	M24x1.00	3.0	15.24	21.6	5.0	14.5	22.0	25	16.5
HEX[1)]	4F	29	29	M24x1.00	3.0	15.24	22.8	5.0	15.2	22.0	25	18.2
HEW	5F	38	38	M33x1.00	6.4	20.32	21.6	5.0	23.9	31.0	34	16.5
HEX[1)]	5F	38	38	M33x1.00	6.4	20.32	30.4	5.0	23.9	31.0	34	26.4

Panel cut-out (page 138) PCB drilling pattern (page 139)

Note: [1)] the L length of these models is special.

Type

Multipole

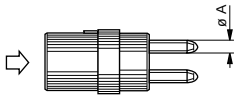

Male crimp contacts

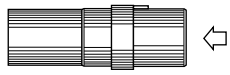

Female crimp contacts

	Reference	Number of contacts	ø A (mm)	Contact type: Crimp	Contact type: Print	AWG	Test voltage (kV rms)[1] Contact-contact	Test voltage (kV rms)[1] Contact-shell	Rated current (A)[1]
0F	302	2	0.9	●	●	20-22-24	1.45	1.20	10.0
	303	3	0.9	●	●	20-22-24	1.70	1.60	8.0
	304	4	0.7	●	●	22-24-26	1.35	1.10	7.0
	305	5	0.7	●	●	22-24-26	1.25	1.20	6.5
1F	303	3	1.3	●	●	18-20	1.60	1.85	12.0
	305	5	0.9	●	●	20-22-24	1.30	1.55	9.0
	307	7	0.7	●	●	22-24-26	1.45	1.45	7.0
	308	8	0.7	●	●	22-24-26	1.30	1.30	5.0
2F	308	8	0.9	●	●	20-22-24	1.95	1.95	10.0
	310	10	0.9	●	●	20-22-24	1.80	2.10	8.0
	312	12	0.7	●	●	22-24-26	1.65	2.00	7.0
	319	19	0.7	●	●	22-24-26	1.55	1.65	5.0
3F	322	22	0.7	●	●	22-24-26	1.70	1.45	5.5
	330	30	0.7	●	●	22-24-26	1.35	1.20	3.5
4F	340	40	0.7	●	●	22-24-26	1.35	1.30	2.0

Note: [1] see calculation method, caution and suggested standard on page 204.
Other types available on request, based on existing contact configurations of the B series.

Multipole

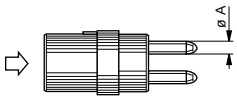

Male crimp contacts

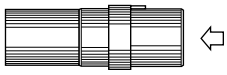

Female crimp contacts

	Reference	Number of contacts	ø A (mm)	Contact type: Crimp	Contact type: Print	AWG	Test voltage (kV rms)[1] Contact-contact	Test voltage (kV rms)[1] Contact-shell	Rated current (A)[1]
5F	350	50	0.9	●	●	20-22-24	1.20	1.45	6.0
	354	54	0.9	●	●	20-22-24	2.00	2.10	5.0
	355	55	0.9	●	●	20-22-24	2.00	2.10	5.0
	364	64	0.9	●	●	20-22-24	1.35	1.85	3.0
	366	66	0.9	●	●	20-22-24	1.30	1.80	3.0

Note: [1] **see calculation method, caution and suggested standard on page 204.**
Other types available on request, based on existing contact configurations of the B series.

Accessories

Crimp Contacts

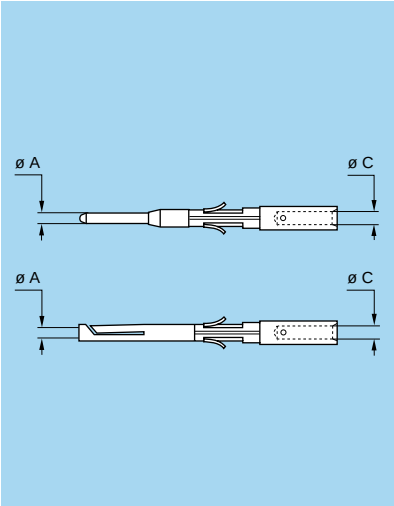

	Contact ø A (mm)	Contact ø C (mm)	Contact part number: male for plug	female for socket	male for socket	female for plug
0F	0.7	0.8	FGG.0B.555.ZZC	EGG.0B.655.ZZM	FGG.0B.555.ZZC	EGG.0B.655.ZZM
	0.9	1.1	FGG.0B.560.ZZC	EGG.0B.660.ZZM	FGG.0B.560.ZZC	EGG.0B.660.ZZM
1F	0.7	0.8	FGG.0B.555.ZZC	EGG.0B.655.ZZM	FGG.0B.555.ZZC	EGG.0B.655.ZZM
	0.9	1.1	FGG.0B.560.ZZC	EGG.0B.660.ZZM	FGG.0B.560.ZZC	EGG.0B.660.ZZM
	1.3	1.4	FGN.1F.565.ZZC	EGN.1F.665.ZZM	FGN.1F.565.ZZC	EGN.1F.665.ZZM
2F	0.7	0.8	FGG.0B.555.ZZC	EGG.0B.655.ZZM	FGG.0B.555.ZZC	EGG.0B.655.ZZM
	0.9	1.1	FGG.0B.560.ZZC	EGG.0B.660.ZZM	FGG.0B.560.ZZC	EGG.0B.660.ZZM
3F	0.7	0.8	FGG.0B.555.ZZC	EGG.0B.655.ZZM	FGG.0B.555.ZZC	EGG.1B.655.ZZM
4F	0.7	0.8	FGG.2B.555.ZZC	EGG.0B.655.ZZM	FGG.1B.555.ZZC	EGG.2B.655.ZZM
5F	0.9	1.1	FGG.3B.560.ZZC	EGG.3B.660.ZZM	FGG.3B.560.ZZC	EGG.3B.660.ZZM

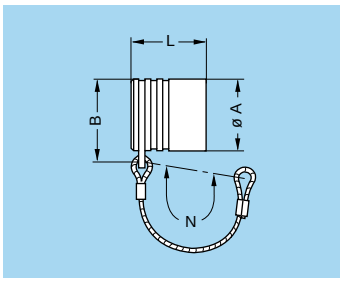

BFN Cap for plug

Part number	Series	Dimensions (mm)			
		A	B	L	N
BFN.1F.100 PCSG	1F	12.0	13.3	12.6	62
BFN.2F.100.PCSG	2F	15.0	16.4	12.8	75

- Body material: PA6.6
- Cord material: Nylon
- Maximum operating temperature: 100°C

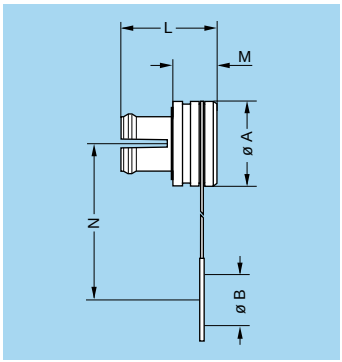

BRA Cap for socket

Part number	Series	Dimensions (mm)				
		A	B	L	M	N
BRA.1F.200.PZSG	1F	14.0	13.7	12.1	5.3	65.5
BRA.2F.200.PZSG	2F	18.0	16.5	12.0	5.6	65.5

- Body material: PA6.6
- Band: PET
- Maximum operating temperature: 100°C

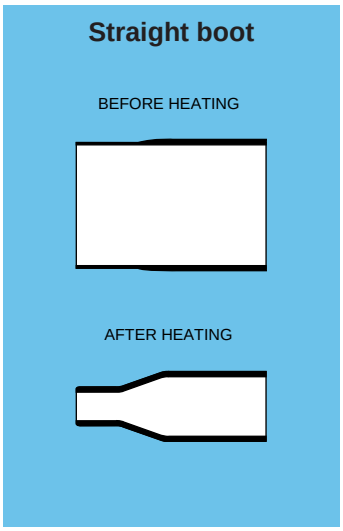

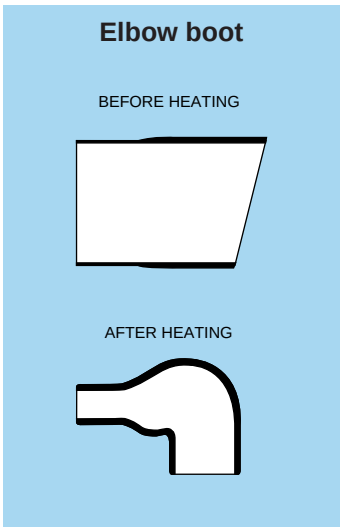

Heatshrink boot

Supplier	Series	Part number		cable ø min. (mm)
		Straight	Elbow 90°	
Raychem®	0F-1F-2F-3F	202 A 111-25/86[1)]	222 A 111-25/86	3.8
		202 A 111-25[2)]	222 A 111-25	3.8
	1F-2F-3F-4F	202 A 121-25/86[1)]	222 A 121-25/86	5.3
		202 A 121-25[2)]	222 A 121-25	5.3
	4F-5F	202 A 142-25/86[1)]	222 A 142-25/86	7.4
		202 A 142-25[2)]	222 A 142-25	7.4
Hellerman®	0F-1F-2F-3F	104-1-G[2)]	1108-1-G	3.8
	1F-2F-3F-4F	105-1-G[2)]	1106-1-G	5.6
	4F-5F	101-1-G[2)]	1104-2-G	7.1

Note:
1) modified elastomer resistant to fluids with hot melt sealant.
2) elastomer resistant to fluids. We recommend a thermosetting sealant with this type of boot.

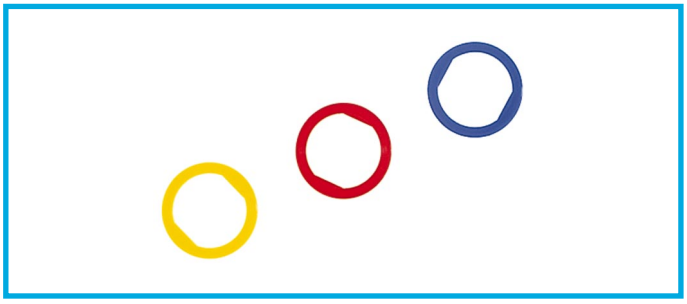

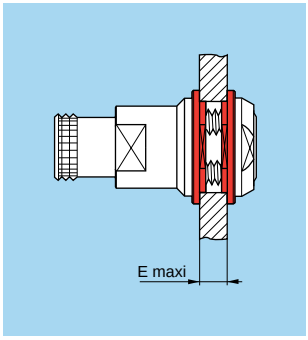

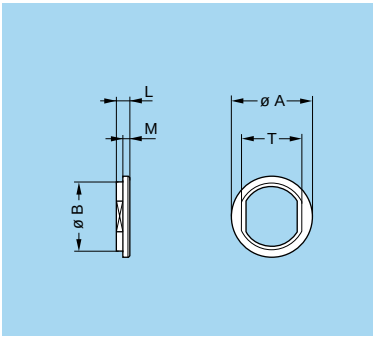

GRA Insulating washers

Part number	Series	Dimensions (mm)					
		A	B	E	L	M	T
GRA.0F.269.G●	0F	15	12.0	4	1.8	1.0	11
GRA.1F.269.G●	1F	19	15.0	4	2.0	1.1	14
GRA.2F.269.G●	2F	22	18.5	4	2.2	1.2	17
GRA.3F.269.G●	3F	24	20.5	4	2.2	1.2	19
GRA.4F.269.G●	4F	31	27.5	4	2.2	1.2	25
GRA.5F.269.G●	5F	40	36.5	4	2.2	1.2	34

Ref.	Colour	Keying
A	blue	N-W
J	yellow	P

Ref.	Colour	Keying
R	red	S-X
V	green	T

Note: the last position "●" of the part number indicates the colour. To obtain the required colour, refer to the above table and change position "●" of the part number to the corresponding letter.
For EG● sockets with a particular thread dimension, use B series insulating washers (see page 178).

- Material: Polyamide (PA.6)

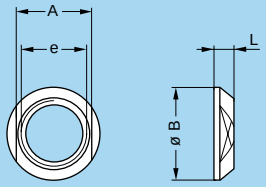

GEC Conical nut

Part number	Series	Dimensions (mm)			
		A	B	e	L
GEC.0F.240.R●	0F	11	13	M10x0.75	2.5
GEC.1F.240.R●	1F	14	17	M13x0.75	3.2
GEC.2F.240.R●	2F	17	20	M16x1.00	4.0
GEC.3F.240.R●	3F	19	22	M18x1.00	4.0
GEC.4F.240.R●	4F	25	29	M24x1.00	5.0
GEC.5F.240.R●	5F	34	38	M33x1.00	5.0

Ref.	Couleur	Keying
A	blue	N-W
J	yellow	P
R	red	S-X
V	green	T

Note: the last position "●" of the part number indicates the colour. To obtain the required colour, refer to the above table and change the position "●" of the part number to the corresponding letter.

● Material: Avional

Note: other accessories are also available with the F series. See section «Accessories» on page 167.

Tooling

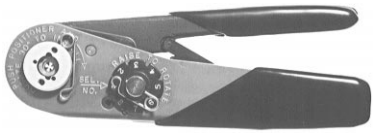

DPC Manual crimping tool

Part number
DPC.91.701.V

According to specification MIL-C-22520/7-01.
For LEMO contacts ø 0.7-0.9-1.3 mm

male

female

DCE Positioners for crimp contacts

Connector		Series	Positioner part number			
Contact ø	Conductor AWG		For male contacts for plug	For female contacts for socket	For male contacts for socket	For female contacts for plug
1.3	18-20	1F	DCE.91.131.FVC	DCE.91.131.FVM	DCE.91.131.FVC	DCE.91.131.FVM
0.9	20-22-24	0F	DCE.91.090.BVC	DCE.91.090.BVM	DCE.91.090.BVC	DCE.91.090.BVM
		1F	DCE.91.090.BVC	DCE.91.090.BVM	DCE.91.090.BVC	DCE.91.090.BVM
		2F	DCE.91.090.BVC	DCE.91.090.BVM	DCE.91.090.BVC	DCE.91.090.BVM
		5F	DCE.91.093.BVC	DCE.91.093.BVM	DCE.91.093.BVC	DCE.91.093.BVM
0.7	22-24-26	0F	DCE.91.070.BVC	DCE.91.070.BVM	DCE.91.070.BVC	DCE.91.070.BVM
		1F	DCE.91.070.BVC	DCE.91.070.BVM	DCE.91.070.BVC	DCE.91.070.BVM
		2F	DCE.91.070.BVC	DCE.91.070.BVM	DCE.91.070.BVC	DCE.91.070.BVM
		3F	DCE.91.070.BVC	DCE.91.070.BVM	DCE.91.070.BVC	DCE.91.071.BVM
		4F	DCE.91.072.BVC	DCE.91.070.BVM	DCE.91.071.BVC	DCE.91.072.BVM

Note: these positioners are suitable for use with both manual and pneumatic crimping tool according to the MIL-C-22520/7-01 standard.

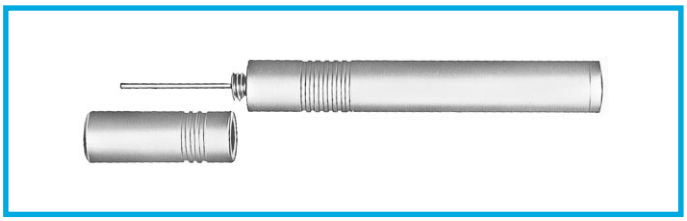

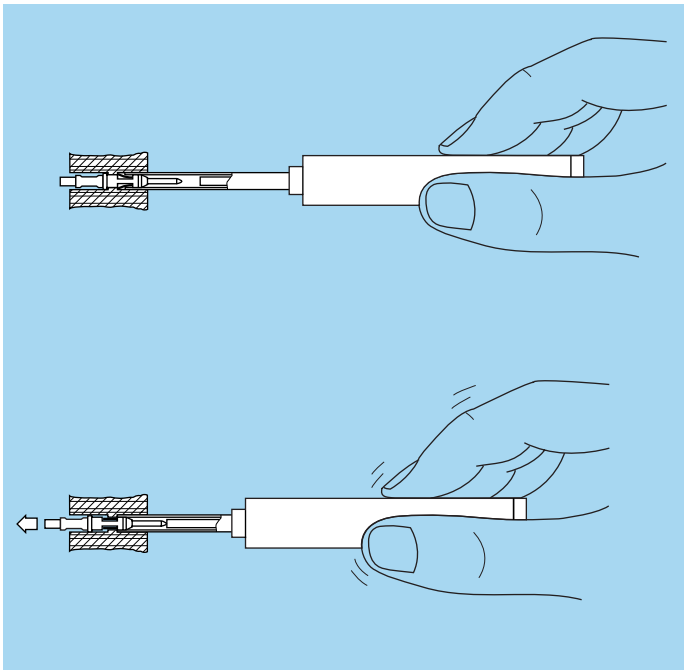

DCF Extractor for crimp contact

contact ø	Extractors Part number
1.3	DCF.91.131.2LT
0.9	DCF.91.090.2LT
0.7	DCF.91.070.2LT

Note: this model is used for male and female contacts.

Banding tool

	Part number		
	GLEN-AIR®	TIE-DEX®	AXON®
Banding tool	600-061	A30199	ACDBS100
Tie wrap	600-057	A31189	AXCL0Z

Note: the banding tool is to be used with screened cables to ensure a good ground contact.

Note: other tooling are also available with the F series. See section «Tooling» on page 183.

Panel cut-outs

Panel cut-outs

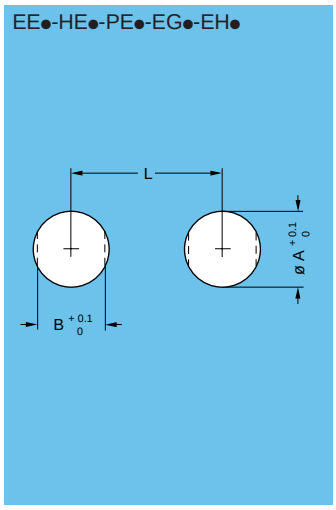

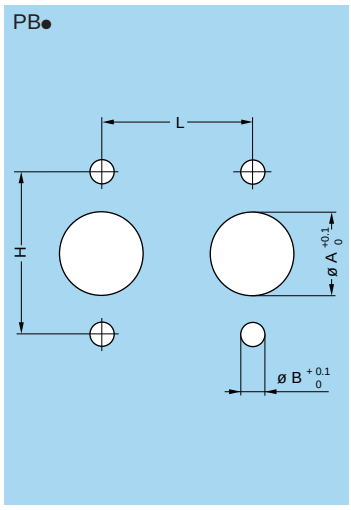

Models			Series	Dimensions (mm)			
				A	B	L	H
EE●	HE●	PE●	0F	10.1	9.1	16.0	–
EE●	HE●	PE●	1F	13.1	11.6	20.0	–
EE●	HE●	PE●	2F	16.1	14.6	23.0	–
EE●	HE●	PE●	3F	18.1	16.6	25.0	–
–	HE●	PE●	4F	24.1	22.1	32.0	–
–	HE●	PE●	5F	33.1	31.1	41.0	–
EG●			0F	9.1	8.3	13.5	–
EG●			1F	12.1	10.6	17.0	–
EG●			2F	15.1	13.6	21.5	–
EG●			3F	18.2	16.6	27.0	–
PB●			0F	11.1	3.2	16.0	21.4
PB●			1F	13.1	3.2	16.0	21.4
PB●			2F	16.1	3.2	19.0	25.9
PB●			3F	18.1	3.2	21.0	29.0
PB●			4F	24.1	3.2	27.0	32.0
PB●			5F	33.1	3.2	33.5	38.2

Mounting nut torque

Series	Torque (Nm)
0F	1.0
1F	1.5
2F	2.0
3F	2.5
4F	5.0
5F	8.0

PCB drilling patterns

0F.302

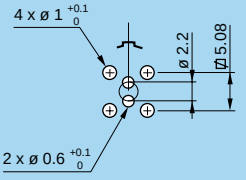

0F.303

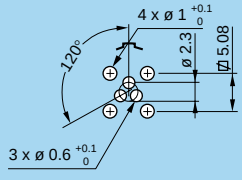

0F.304

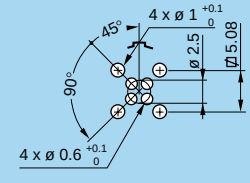

0F.305

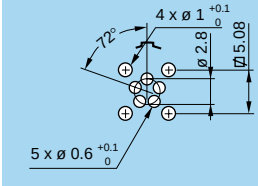

1F.303

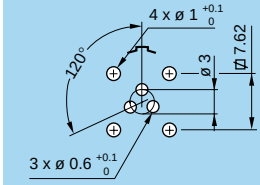

1F.305

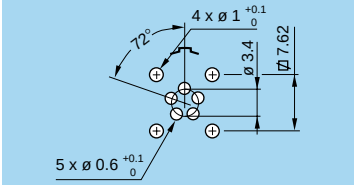

1F.307

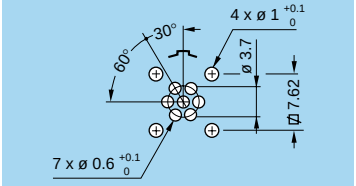

1F.308

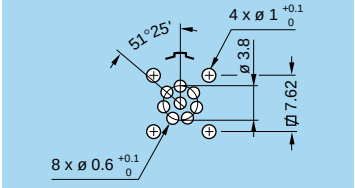

2F.308

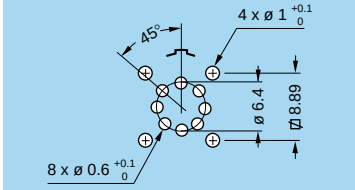

2F.310

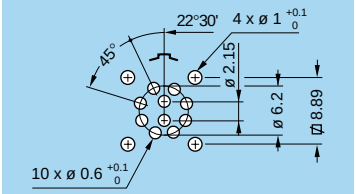

2F.312

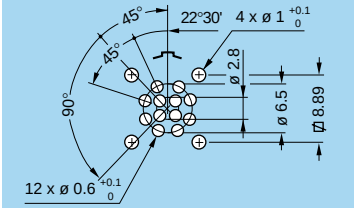

2F.319

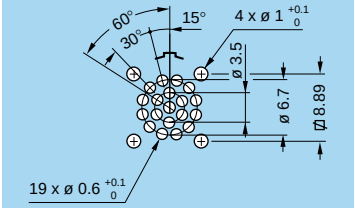

3F.322

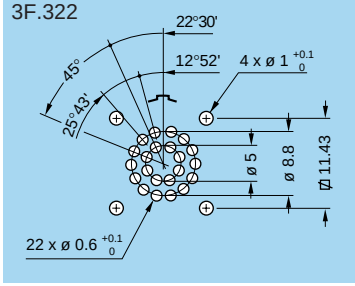

3F.330

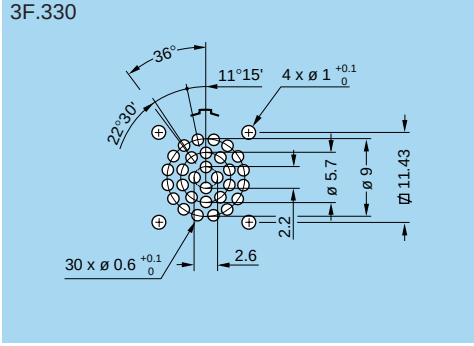

4F.340

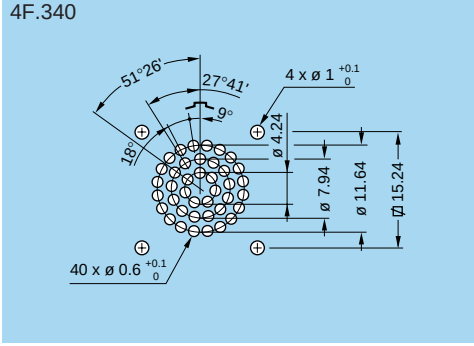

5F.350

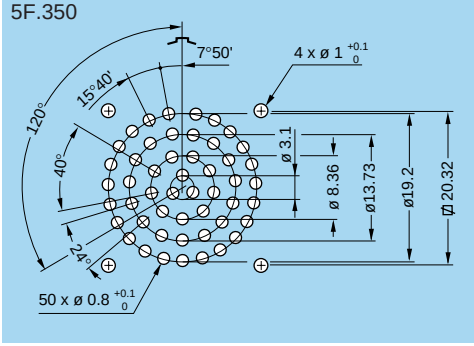

5F.354

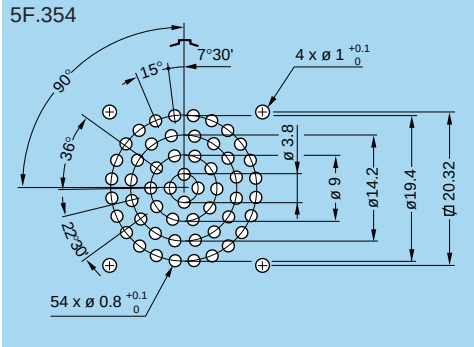

5F.355

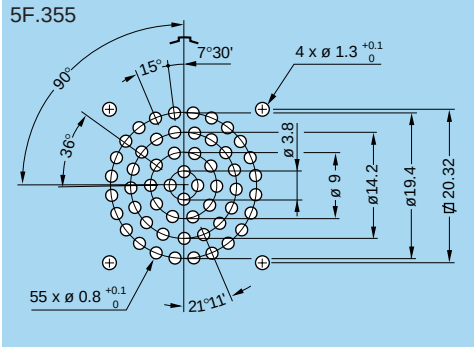

5F.364

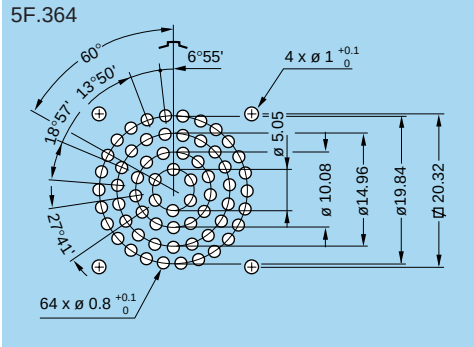

5F.366

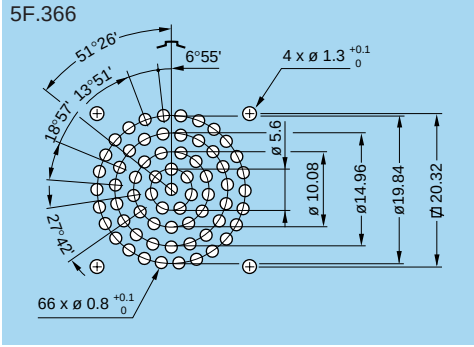

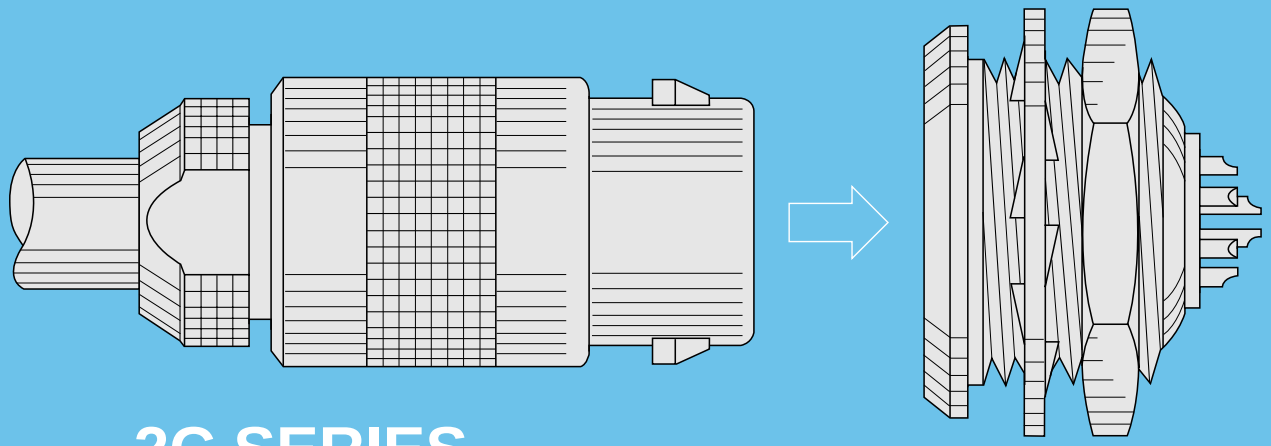

2C SERIES

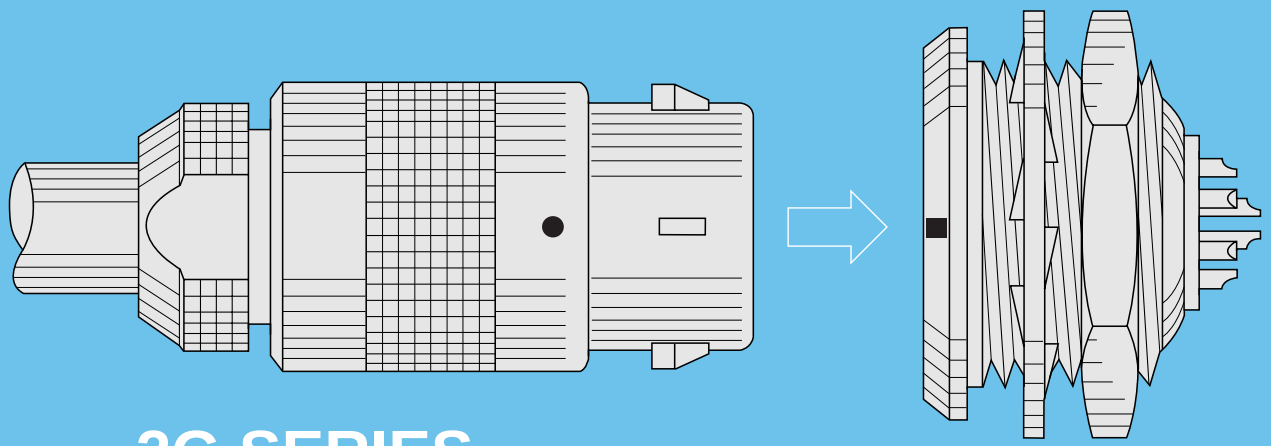

2G SERIES

2C Series

In many applications, it is necessary to use multipole connectors which have shortened dimensions but require high contact density. LEMO short series connectors, which are shorter than 30 mm, perfectly meet these needs.
The 2C series, featuring a hermaphroditic insert, is available in multipole type up to 14 contacts.

Interconnections

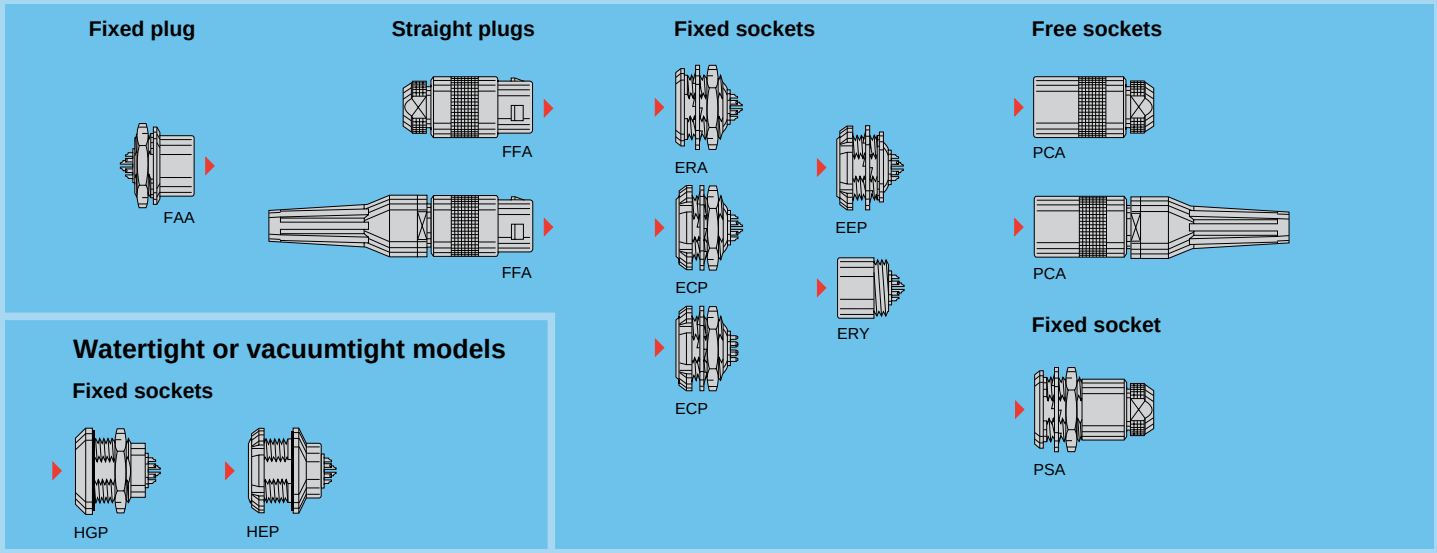

Model Description

ECP Fixed socket with two nuts (back panel mounting)
ECP Fixed socket with two nuts, straight contact for printed circuit (back panel mounting)
EEP Fixed socket, nut fixing (back panel mounting)
ERA Fixed socket, nut fixing
ERY Fixed socket, protruding shell (screw fixing on the panel)
FAA Fixed plug, nut fixing, non-latching
FFA Straight plug, cable collet
FFA Straight plug, cable collet and nut for fitting a bend relief
HEP Fixed socket, nut fixing, watertight or vacuumtight (back panel mounting)
HGP Fixed socket, nut fixing, watertight or vacuumtight
PCA Free socket, cable collet
PCA Free socket, cable collet and nut for fitting a bend relief
PSA Fixed socket nut fixing, cable collet

Part Section Showing Internal Components

Fixed socket

1. outer shell
2. hexagonal nut
3. locking washer
4. insulator
5. male contact
6. female contact

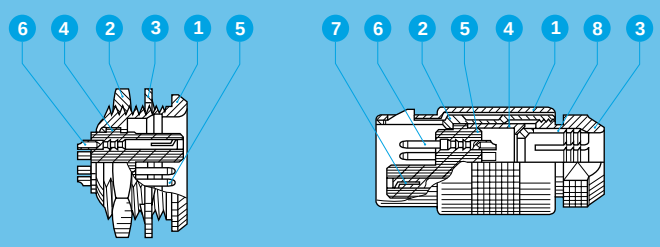

Straight plug

1. outer shell
2. latch sleeve
3. collet nut
4. split centre-piece
5. insulator
6. male contact
7. female contact
8. collet

Technical Characteristics

Mechanical and Climatical

Characteristics	Value	Standard
Endurance	> 500 cycles	IEC 60512-5 test 9a
Humidity	up to 95% at 60° C	
Temperature range[1)]	- 55° C + 250° C	
Salt spray corrosion test	> 144 h	IEC 60512-6 test 11f
Protection index	IP50	IEC 60529
Climatical category	55/175/21	IEC 60068-1

Note:
The various tests have been carried out with FFA and ERA connector pairs, with chrome-plated brass shell and PEEK insulator.
Detailed electrical characteristics, as well as materials and treatment are presented in the chapter Technical Characteristics on page 197.
[1)] for watertight or vacuumtight models: -20°C, +80°C

Part Number Example

Straight plug with cable collet

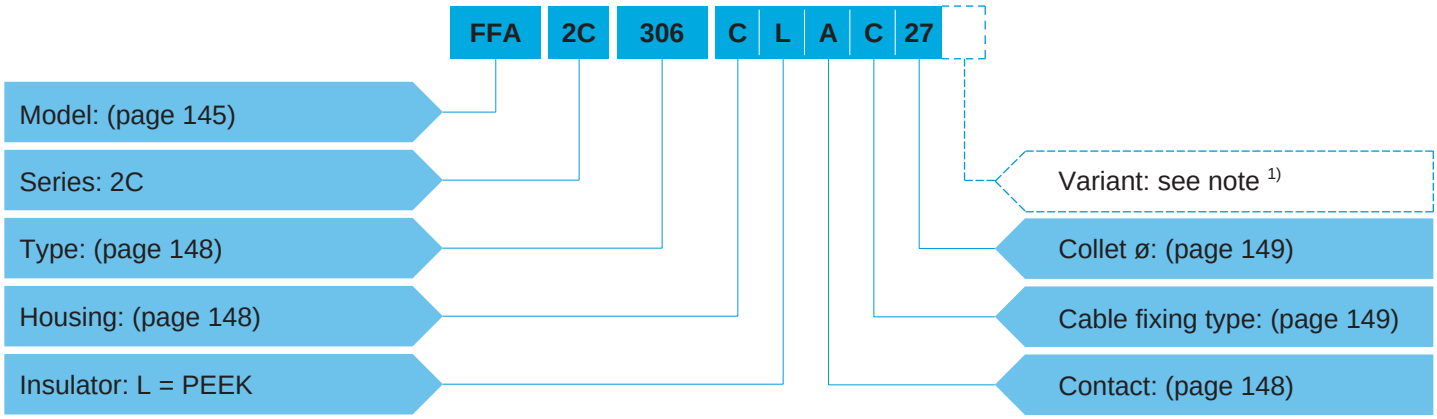

FFA.2C.306.CLAC27 = straight plug with cable collet, 2C series, multipole type with 6 contacts, outer shell in chrome-plated brass, PEEK insulator, male solder contacts, C type collet for 2.7 mm diameter cable.

Fixed socket

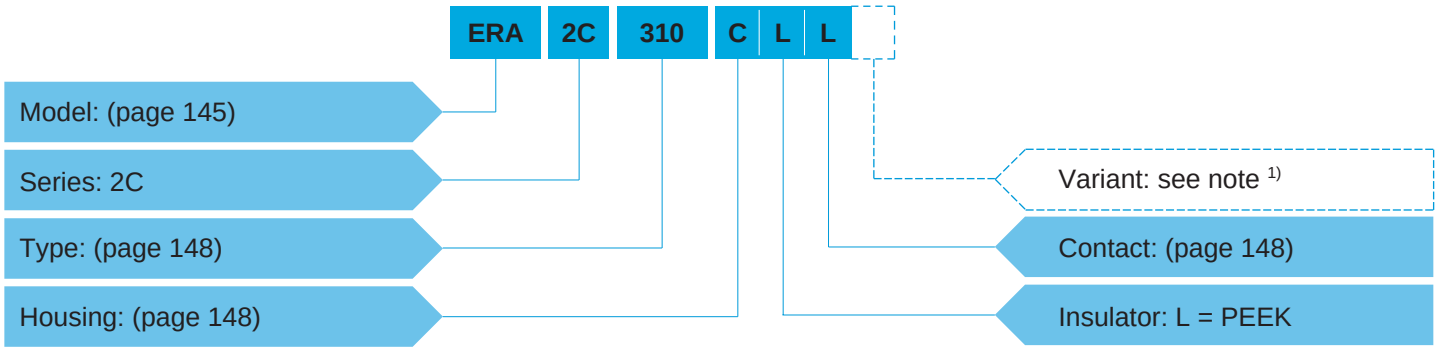

ERA.2C.310.CLL = fixed socket, nut fixing, 2C series, multipole type with 10 contacts, outer shell in chrome-plated brass, PEEK insulator, female solder contacts.

Free socket

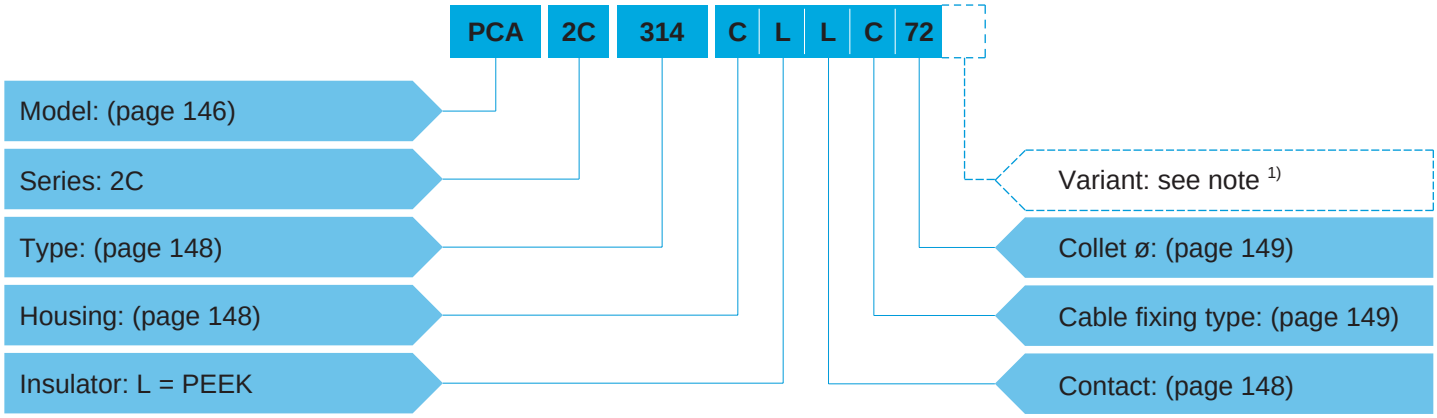

PCA.2C.314.CLLC72 = straight socket with cable collet, 2C series, multipole type with 14 contacts, outer shell in chrome-plated brass, PEEK insulator, female contacts solder, C type collet for 7.2 mm diameter cable.

Note: 1) the «Variant» position in the reference is used to specify either the presence of a collet nut for fitting the bend relief or the anodized colour of the housing in aluminium alloy.
For models with collet nut for fitting the bend relief, a «Z» should be indicated and a bend relief can be ordered separately as indicated in the «Accessories» section. An order for a connector with bend relief should thus include two part numbers.
For the various housings available in colours, the corresponding letter in the part number for the colour is indicated on page 148.
For the watertight models of socket, the letter «P» is used; for the vacuumtight models of socket the letters «PV» shall be indicated.

FFA.2C Straight plug, cable collet

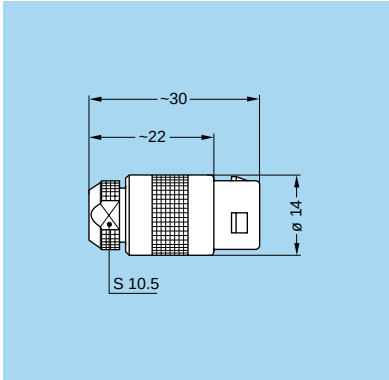

FFA.2C Straight plug, cable collet and nut for fitting a bend relief

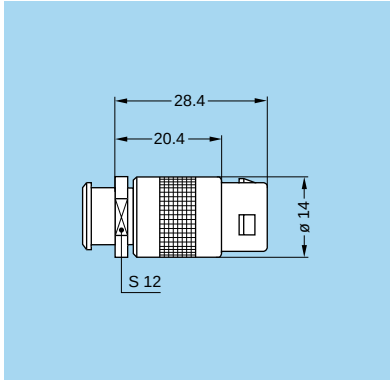

Note: the bend relief must be ordered separately (see page 175).

FAA.2C Fixed plug, nut fixing, non-latching

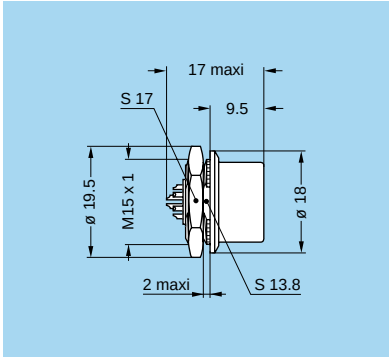

Panel cut-out (page 150)

ERA.2C Fixed socket, nut fixing

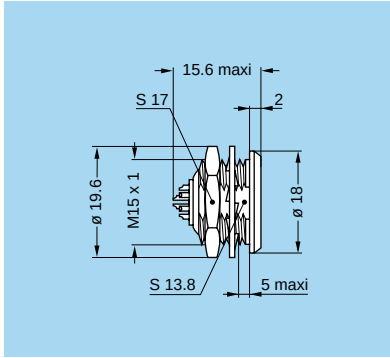

Panel cut-out (page 150)

ECP.2C Fixed socket with two nuts (back panel mounting)

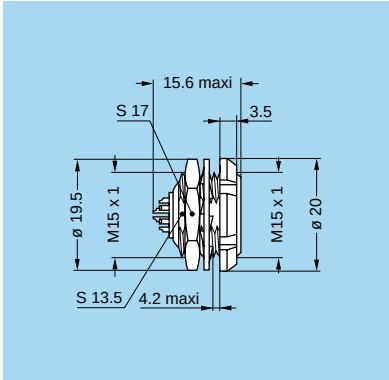

Panel cut-out (page 150)

Note: all dimensions are in millimetres.

ECP.2C Fixed socket with two nuts, straight contact for printed circuit (back panel mounting)

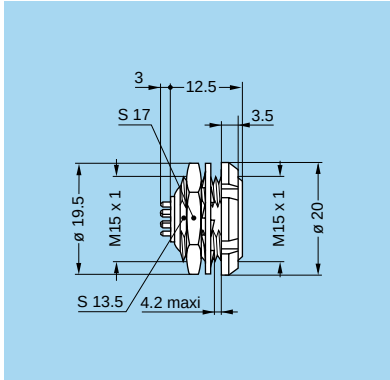

Panel cut-out (page 150)

PCB drilling pattern (page 150)

EEP.2C Fixed socket, nut fixing (back panel mounting)

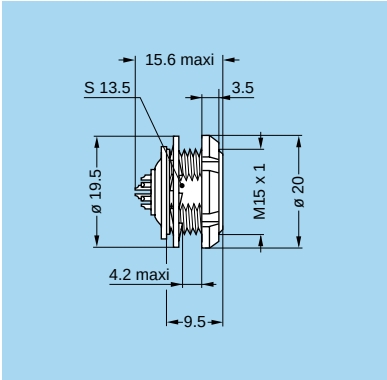

Panel cut-out (page 150)

ERY.2C Fixed socket, protruding shell, (screw fixing on the panel)

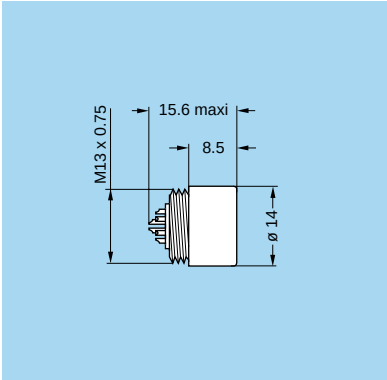

Panel cut-out (page 150)

PCA.2C Free socket, cable collet

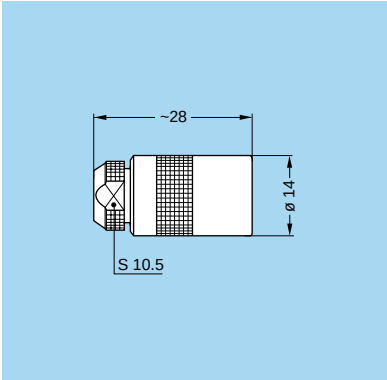

PCA.2C Free socket, cable collet and nut for fitting a bend relief

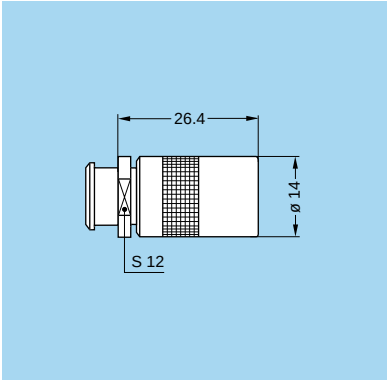

Note: the bend relief must be ordered separately (see page 175).

PSA.2C Fixed socket nut fixing, cable collet

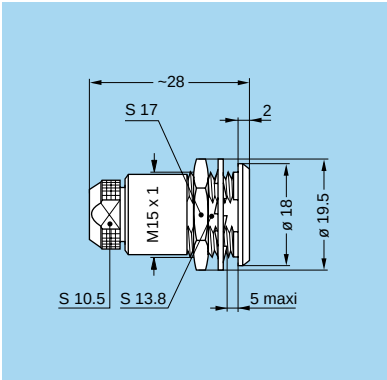

Panel cut-out (page 150)

Note: all dimensions are in millimetres.

Watertight or vacuumtight models

HGP and HEP socket allow the device on which they are fitted to reach a protection index of IP68 as per IEC 60529. They are fully compatible with plugs of the same series and are widely used for portable radios, military, laboratory equipment, aviation, etc.
These models are identified by a letter «P» at the end of the reference.
These models are also available in a vacuumtight version. Such models are identified by an additional letter «V» at the end of the part number (certificate on request).
Epoxy resin is used to seal these models.
Please refer to page 8 to locate the chapter on selecting watertight connectors.

Part number example:
Watertight socket: HGP.2C.304.CLLP
Vacuumtight socket: HGP.2C.304.CLLPV

Technical Characteristics

Mechanical and Climatical

Characteristics	Value	Standard
Endurance	> 500 cycles	IEC 60512-5 test 9a
Humidity	up to 95% at 60° C	
Temperature range	- 20° C, +80° C	
Salt spray corrosion test	> 144h	IEC 60512-6 test 11f
Protection index (mated)	IP 68	IEC 60529
Climatical category	20/80/21	IEC 60068-1
Leakage rate (He)[1)]	$< 10^{-6}$ mbar.l.s^{-1}	IEC 60512-7 test 14b
Maximum operating pressure	5 bars	IEC 60512-7 test 14d

Note: [1)] only for vacuumtight models.

HGP.2C Fixed socket, nut fixing, watertight or vacuumtight

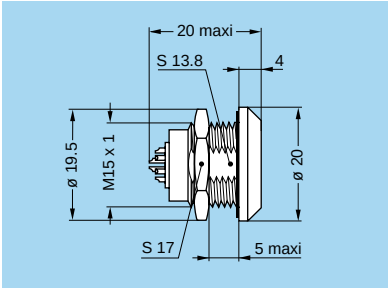

Panel cut-out (page 150)

HEP.2C Fixed socket, nut fixing, watertight or vacuumtight (back panel mounting)

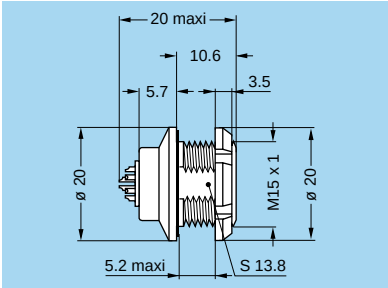

Panel cut-out (page 150)

Type

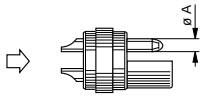

Male solder contacts

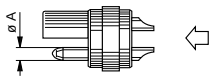

Female solder contacts

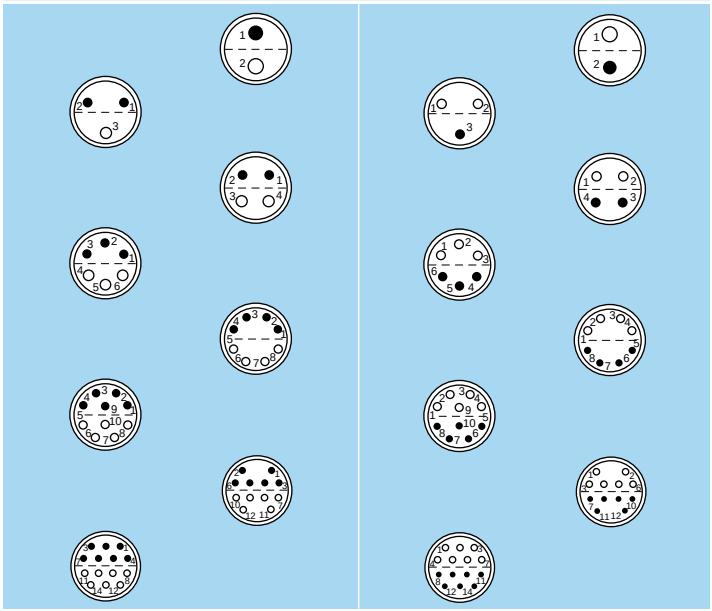

Reference	Number of contacts	ø A (mm)	Contact type		Test voltage (kV rms)[1) 2)]	Test voltage (kV dc)[1) 2)]	Rated current (A)[1)]
			Solder	Print			
302	2	1.6	●	–	1.80	2.40	20
303	3	1.3	●	–	1.50	2.10	15
304	4	1.3	●	–	1.80	2.40	15
306	6	1.3	●	–	1.50	2.10	12
308	8	0.7	●	●	0.95	1.35	7
310	10	0.7	●	●	0.95	1.35	7
312	12	0.7	●	●	0.60	0.90	5
314	14	0.7	●	●	0.60	0.90	5

Note: 1) **see calculation method, caution and suggested standard on page 204.**
2) lowest measured value; contact to contact or contact to shell.

Housings

Ref.	Material	Surface treatment		Note
		Outer shell and collet nut	Latch sleeve and earthing crown	
C	Brass	chrome	nickel	●
N	Brass	nickel	nickel	○
K	Brass	black chrome	nickel	●
L	Aluminium alloy[1)]	anodized	nickel-plated	○

Note:
1) the «Variant» position of the reference is used to specify the anodized colour.

● First choice alternative ○ Special order alternative

Contact

Ref.	Contact type
A	Male solder
L	Female solder
N	Female print

Multipole connectors are fitted with hermaphroditic inserts including male and female contacts. However, by convention, the letter indicating the contact type in the part number composition will be the male contact (reference A) for plugs and female contact (reference L) for sockets.

Collets

Short collet

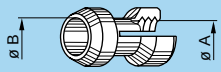

Reference		Collet ø		Cable ø		Part number of the collet [1]
Type	ø	ø A	ø B	max.	min.	
C	27	2.7	–	2.6	2.2	FFA.2C.727.CN
C	32	3.2	–	3.1	2.7	FFA.2C.732.CN
C	37	3.7	–	3.6	3.2	FFA.2C.737.CN
C	42	4.2	–	4.1	3.7	FFA.2C.742.CN
C	47	4.7	–	4.6	4.2	FFA.2C.747.CN
C	52	5.2	–	5.1	4.7	FFA.2C.752.CN
C	57	5.7	–	5.6	5.2	FFA.2C.757.CN
C	62	6.2	–	6.1	5.7	FFA.2C.762.CN
C	67	6.7	6.2	6.6	6.2	FFA.2C.767.CN
C	72	7.2	6.2	7.1	6.7	FFA.2C.772.CN
C	75	7.5	6.2	7.4	7.2	FFA.2C.775.CN
C	80	8.0	6.2	7.9	7.5	FFA.2C.780.CN

Note: [1] for ordering collets separately.
All dimensions are in millimetres.

Long collet

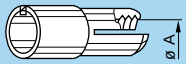

Reference		Collet ø		Cable ø		Part number of the collet [1]
Type	ø	ø A	ø B	max.	min.	
L	14	1.4	–	1.3	0.8	FFA.2C.714.LN
L	27	2.7	–	2.6	2.2	FFA.2C.727.LN
L	32	3.2	–	3.1	2.7	FFA.2C.732.LN
L	37	3.7	–	3.6	3.2	FFA.2C.737.LN
L	42	4.2	–	4.1	3.7	FFA.2C.742.LN
L	47	4.7	–	4.6	4.2	FFA.2C.747.LN
L	52	5.2	–	5.1	4.7	FFA.2C.752.LN
L	57	5.7	–	5.6	5.2	FFA.2C.757.LN
L	62	6.2	–	6.1	5.7	FFA.2C.762.LN
L	67	6.7	–	6.6	6.2	FFA.2C.767.LN
L	72	7.2	–	7.1	6.7	FFA.2C.772.LN
L	77	7.7	–	7.6	7.2	FFA.2C.777.LN
L	82	8.2	–	8.1	7.7	FFA.2C.782.LN

Variant

Anodized colour

The «variant» position of the reference is used to specify the anodized colour according to the table below.

Part number for connector with standard collet nut

Ref.	Anodized colour
A	blue
J	yellow
N	black

Ref.	Anodized colour
R	red
T	natural
V	green

Part number for connector with bend relief backnut

Ref.	Anodized colour
L	black
X	natural

Note: other anodizing colours are available for connectors with bend relief backnut. Please consult us.

Accessories

Accessories for the 2C series are identical with the 2G series. Please refer to corresponding pages (page 155).

Tooling

Please consult the «Tooling» section (page 183).

Panel cut-outs

Panel cut-outs

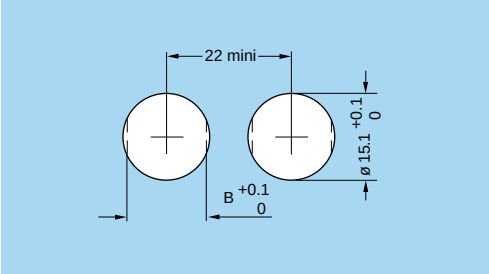

Model	B (mm)
ECP	13.6
EEP	13.6
ERA	13.9
FAA	13.9
HEP	13.9
HGP	13.9
PSA	13.9

ERY

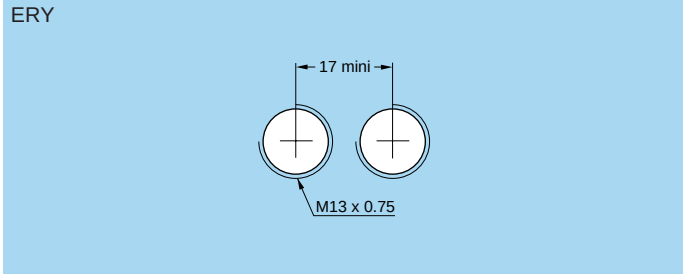

Note: mounting nut torque: 6 Nm (1N = 0.102 kg)

PCB drilling patterns

308

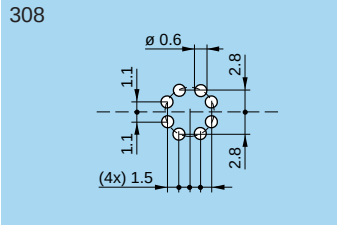

310

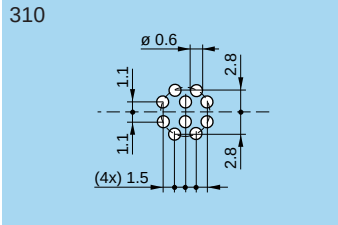

312

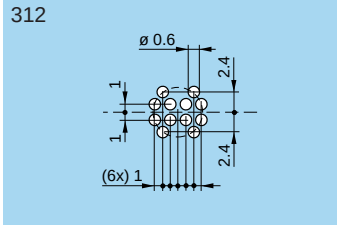

314

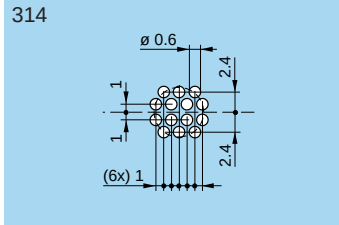

2G Series

The 2G series with key (G) provides the same advantages of space saving due to its small dimensions as the 2C series and is available in multipole type with 18 contacts.

Interconnections

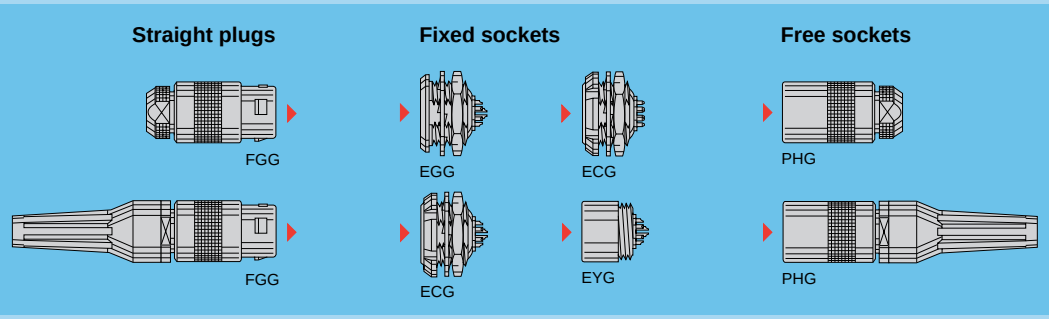

Model Description

ECG Fixed socket with two nuts, key (G) (back panel mounting)
ECG Fixed socket with two nuts, key (G), straight contact for printed circuit (back panel mounting)
EGG Fixed socket, nut fixing, key (G)
EYG Fixed socket, key (G), protruding shell (screw fixing on the panel)
FGG Straight plug, key (G), cable collet
FGG Straight plug, key (G), cable collet and nut for fitting a bend relief
PHG Free socket, key (G), cable collet
PHG Free socket, key (G), cable collet and nut for fitting a bend relief

Part Section Showing Internal Components

Fixed socket

1. outer shell
2. hexagonal nut
3. locking washer
4. insulator
5. female contact

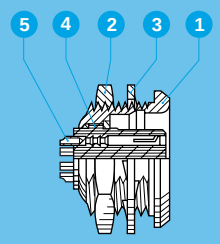

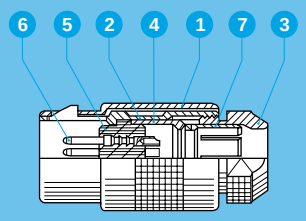

Straight plug

1. outer shell
2. latch sleeve
3. collet nut
4. split centre-piece
5. insulator
6. male contact
7. collet

Technical Characteristics

Mechanical and Climatical

Characterisitcs	Value	Standard
Endurance	> 500 cycles	IEC 60512-5 test 9a
Humidity	up to 95% at 60° C	
Temperature range	- 55° C + 250° C	
Salt spray corrosion test	> 144 h	IEC 60512-6 test 11f
Protection index	IP50	IEC 60529
Climatical category	55/175/21	IEC 60068-1

Note:
The various tests have been carried out with FGG and EGG connector pairs, with chrome-plated brass shell and PEEK insulator.
Detailed electrical characteristics, as well as materials and treatment are presented in the chapter Technical Characteristics on page 197.

Part Number Example

Straight plug with cable collet

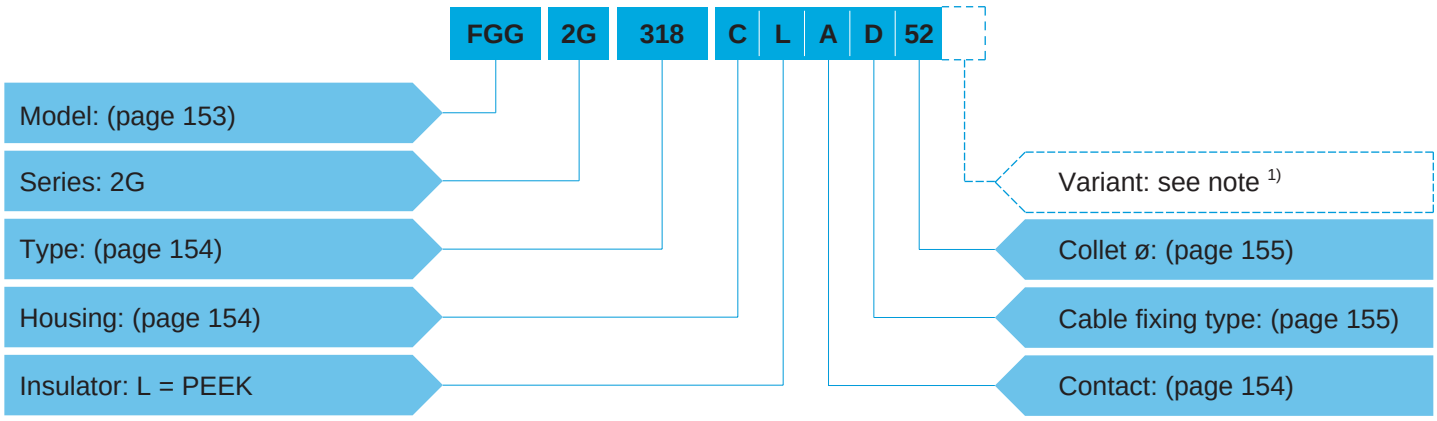

FGG.2G.318.CLAD52 = straight plug with cable collet, 2G series, multipole type with 18 contacts, outer shell in chrome-plated brass, PEEK insulator, male solder contacts, D type collet for 5.2 mm diameter cable.

Fixed socket

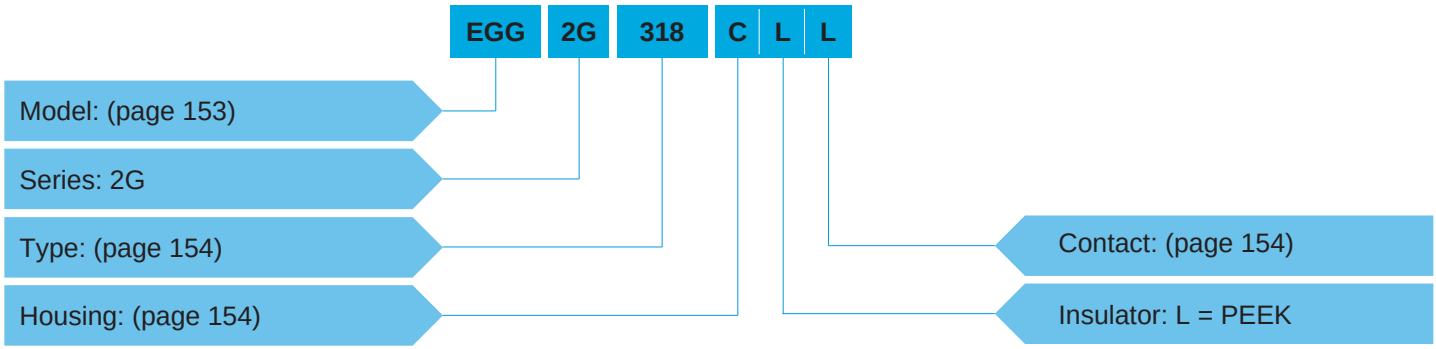

EGG.2G.318.CLL = fixed socket, 2G series, multipole type with 18 contacts, outer shell in chrome-plated brass, PEEK insulator, female solder contacts.

Free socket

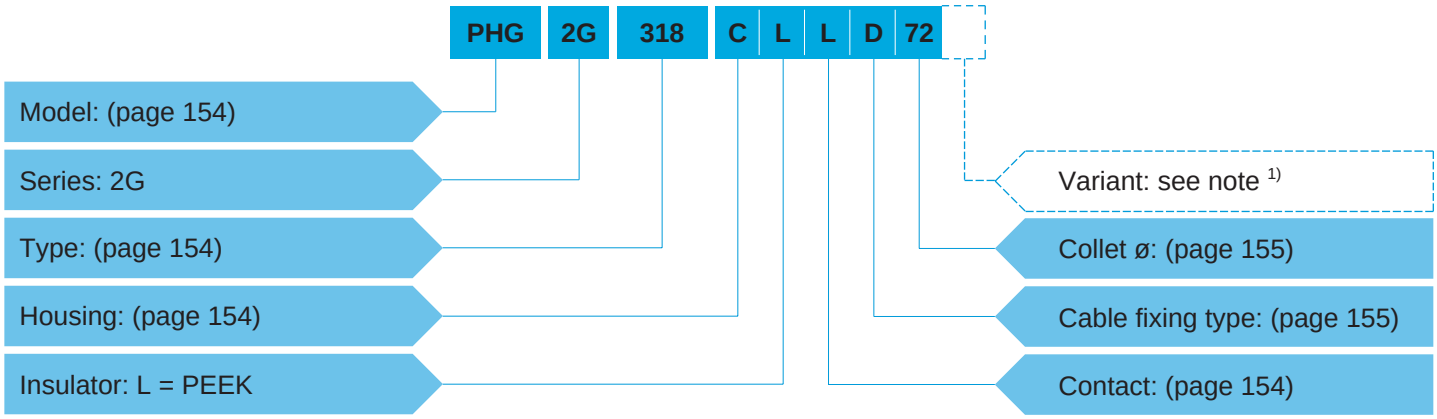

PHG.2G.318.CLLD72 = straight socket with cable collet, 2G series, multipole type with 18 contacts, outer shell in chrome-plated brass, PEEK insulator, female solder contacts, D type collet for 7.2 mm diameter cable.

Note: 1) the «Variant» position of the part number is used to specify the presence of a nut for fitting a bend relief, a «Z» should be indicated and a bend relief can be ordered separately as indicated in the «Accessories» section. An order for a connector with bend relief should thus include two part numbers.

FGG.2G Straight plug, key (G), cable collet

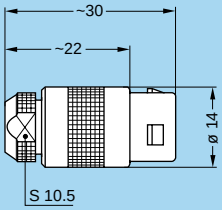

FGG.2G Straight plug, key (G), cable collet and nut for fitting a bend relief

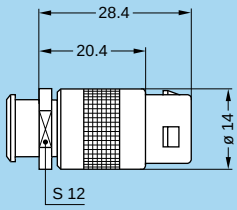

Note: the bend relief must be ordered separately (see page 175).

EGG.2G Fixed socket, nut fixing, key (G)

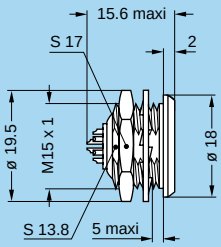

Panel cut-out (p. 156)

ECG.2G Fixed socket with two nuts, key (G) (back panel mounting)

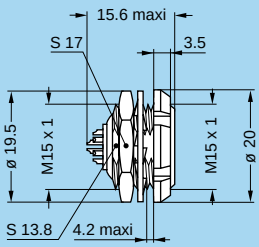

Panel cut-out (p. 156)

ECG.2G Fixed socket with two nuts, key (G), straight contact for printed circuit (back panel mounting)

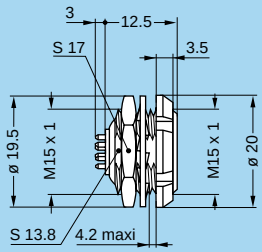

Panel cut-out (p. 156)

PCB drilling pattern (page 156)

EYG.2G Fixed socket, key (G), protruding shell (screw fixing on the panel)

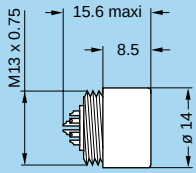

Panel cut-out (p. 156)

Note: all dimensions are in millimetres.

PHG.2G Free socket, key (G), cable collet

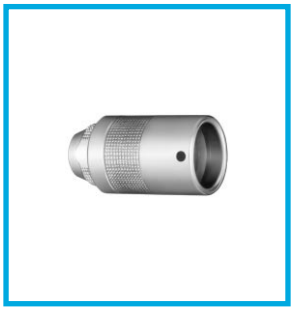

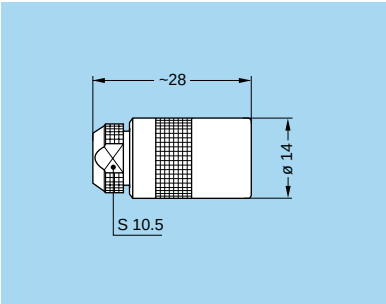

PHG.2G Free socket, key (G), cable collet and nut for fitting a bend relief

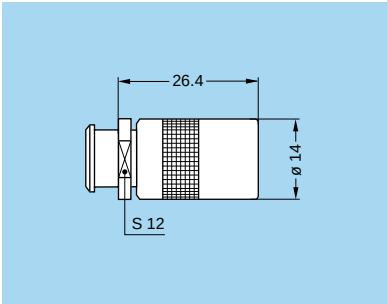

Note: the bend relief must be ordered separately (see page 175).

Type

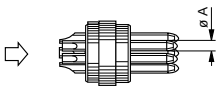

Male solder contacts

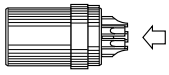

Female solder contacts

Reference	Number of contacts	ø A (mm)	Contact type		Test voltage (kV rms)[1) 2)]	Test voltage (kV dc)[1) 2)]	Rated current (A)[1)]
			Solder	Print			
318	18	0.7	●	●	1.4	2.0	5.5

Note: 1) **see calculation method, caution and suggested standard on page 204.**
2) lowest measured value; contact to contact or contact to shell.

Housings

Ref.	Material	Surface treatment		Note
		Outer shell and collet nut	Latch sleeve and earthing crown	
C	Brass	chrome	nickel	●
N	Brass	nickel	nickel	○
K	Brass	black chrome	nickel	●

● First choice alternative ○ Special order alternative

Contact

Ref.	Contact type
A	Male solder
L	Female solder
N	Female print

Collets

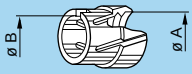

Reference		Collet ø		Cable ø		Part number of the collet [1]
Type	ø	ø A	ø B	max.	min.	
D	52	5.2	–	5.1	4.5	FFA.2C.752.DN
D	62	6.2	–	6.1	5.5	FFA.2C.762.DN
D	72	7.2	6.2	7.1	6.5	FFA.2C.772.DN
D	80	8.0	6.2	7.9	7.5	FFA.2C.780.DN

Note:
[1] for ordering collets separately.
All dimensions are in millimetres.

Accessories

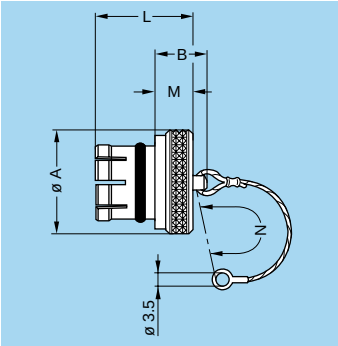

BRE Blanking caps for fixed and free sockets

Part number	Dimensions (mm)				
	A	B	L	M	N
BRE.2G.200.NAS	18	12	10.6	6.0	85

Note: these caps are suitable for use with any alignment key configuration. The last letter «S» of the part number stands for the material of the O ring (silicone rubber). O-ring's made from FPM are also available; if required, replace the letter «S» by «V».

- Body material: Nickel-plated brass (Ni 3 µm)
- Lanyard material: Stainless steel
- O-ring material: Silicone rubber or FPM

- Maximum operating temperature: 200°C
- Watertightness: IP61 according to IEC 60529

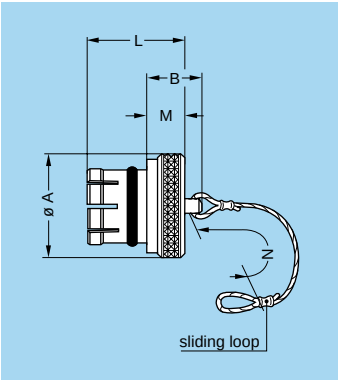

BRF Blanking caps for fixed sockets

Part number	Dimensions (mm)				
	A	B	L	M	N
BRF.2G.200.NAS	18	12	14.0	6.0	85

Note: this caps are suitable for use with any alignment key configuration. The last letter «S» of the part number stands for the material of the O ring (silicone rubber). O-ring's made from FPM are also available; if required, replace the letter «S» by «V».

- Body material: Nickel-plated brass (Ni 3 µm)
- Lanyard material: Stainless steel
- O-ring material: Silicone rubber or FPM
- Maximum operating temperature: 200°C
- Watertightness: IP61 according to IEC 60529

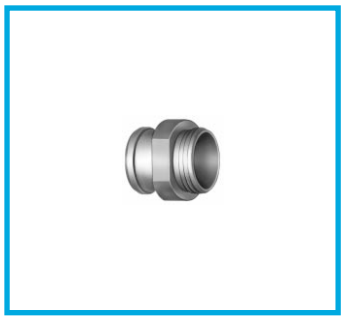

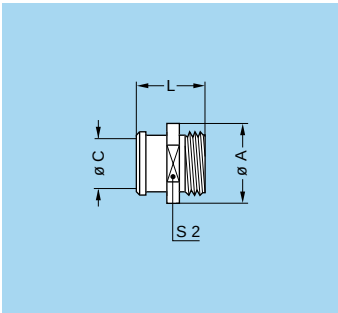

FFM Nut for bend relief

Part number	Dimensions (mm)			
	A	C	L	S2
FFM.2C.130.LC	14	8	12.2	12

Note: for bend reliefs to be used with this nut see section «Accessories» page 175.

- Material: Chrome-plated brass (0.3 µm)

Note: other accessories are also available. See section «Accessories» on page 167.

Tooling

Please consult the «Tooling» section (page 183).

Panel cut-outs

Panel cut-outs

EGG - ECG

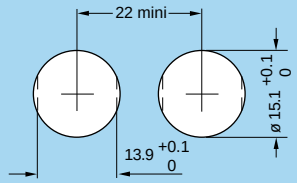

EYG

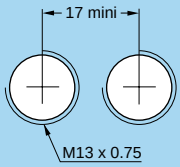

PCB drilling pattern

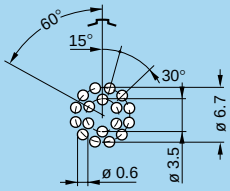

Note: mounting nut torque: 6 Nm (1N = 0.102 kg)

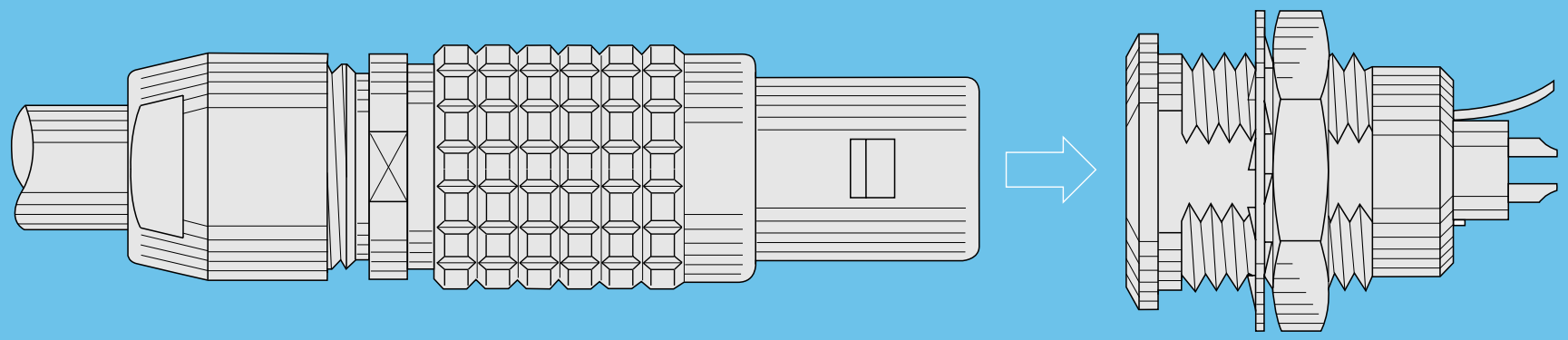

1D SERIES (quadrax)

1D Series

1D series QUADRAX connectors have four concentric contacts insulated from the connector shell, ready to solve any kind of audio-stereo patch panel problems.
Specially developed for major radio and television channels, this new connector type provides the possibility of blind mating with the full security of the LEMO Push-Pull self-latching system.
They can also be fitted on panel in a «star» configuration for switching a single signal to different outputs.
To enable the user to create his own coding system, bridge plug housings, double panel washers or insulating washers for sockets as well as cable bend reliefs are available in nine colours.

Interconnections

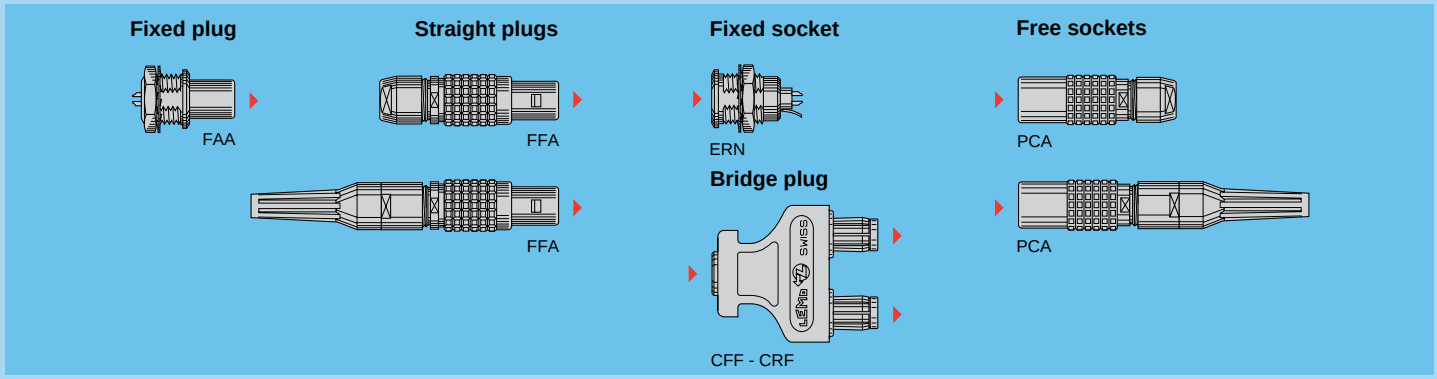

Model Description

CFF Bridge plug with two non-latching plugs
CRF Bridge plug with two non-latching plugs with monitoring output
ERN Fixed socket nut fixing, with earthing tag

FAA Fixed plug, nut fixing, non-latching
FFA Straight plug, cable collet
FFA Straight plug, cable collet and nut for fitting a bend relief

PCA Free socket, cable collet
PCA Free socket, cable collet and nut for fitting a bend relief

Part Section Showing Internal Components

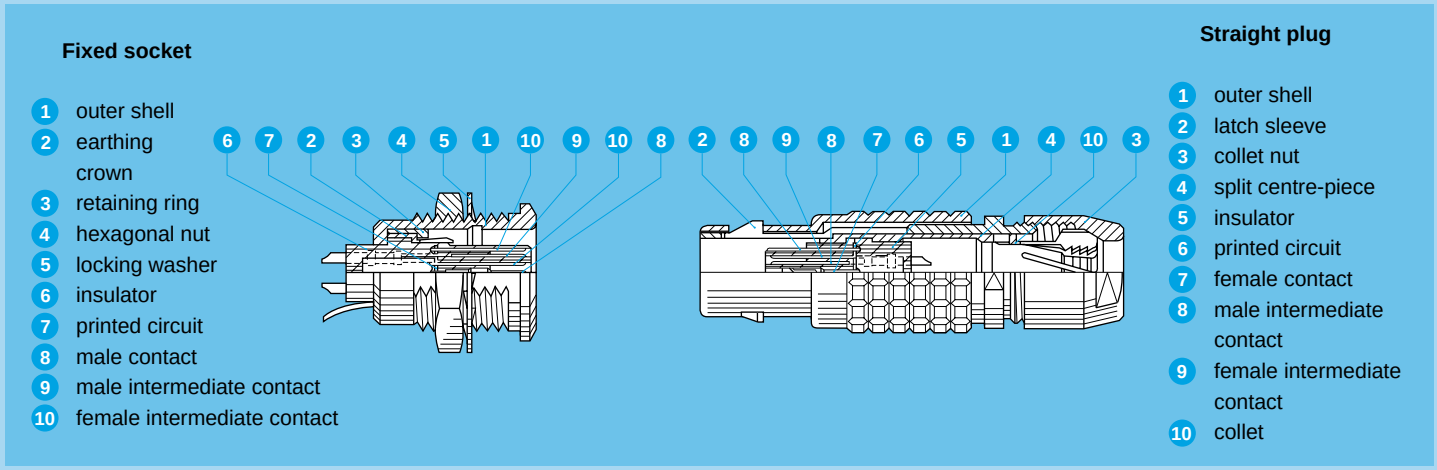

Technical Characteristics

Mechanical and Climatical

Characteristics	Value	Standard
Endurance	> 1000 cycles	IEC 60512-5 test 9a
Temperature range[1)]	-40° C, +120° C	
Salt spray corrosion test	> 144h	IEC 60512-6 test 11f
Protection index	IP50	IEC 60529

Note:
[1)] for bridge plug: -40° C, +80° C
Detailed electrical characteristics, as well as materials and treatment are presented in the chapter Technical Characteristics on page 197.

Electrical

Characteristics		Value	Standard
Insulation resistance		> $10^{11}\Omega$	IEC 60512-2 test 3a
Insul. res. after 48h 95%RH		> $10^{10}\Omega$	IEC 60512-2 test 3a
Screening efficiency	at 10 MHz	> 70 dB	IEC 60169-1-3
	at 1 GHz	> 35 dB	IEC 60169-1-3
Contact resistance		< 20mΩ	IEC 60512-2 test 2a

Part Number Example

Straight plug with cable collet

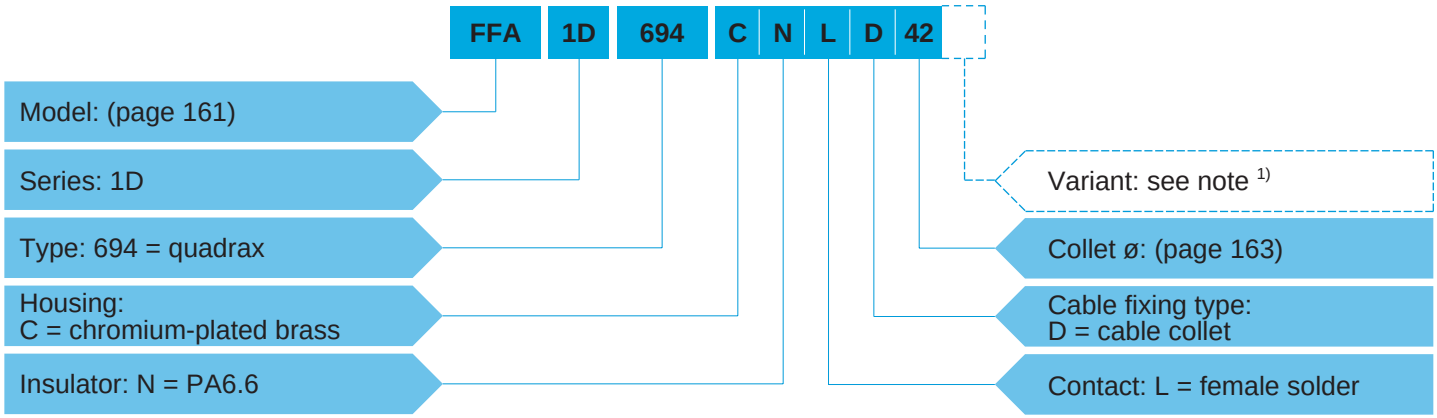

FFA.1D.694.CNLD42 = straight plug with cable collet, 1D series, quadrax type, outer shell in chrome-plated brass, PA6.6 insulator, female solder contacts, D type collet for 4.2 mm diameter cable.

Fixed socket

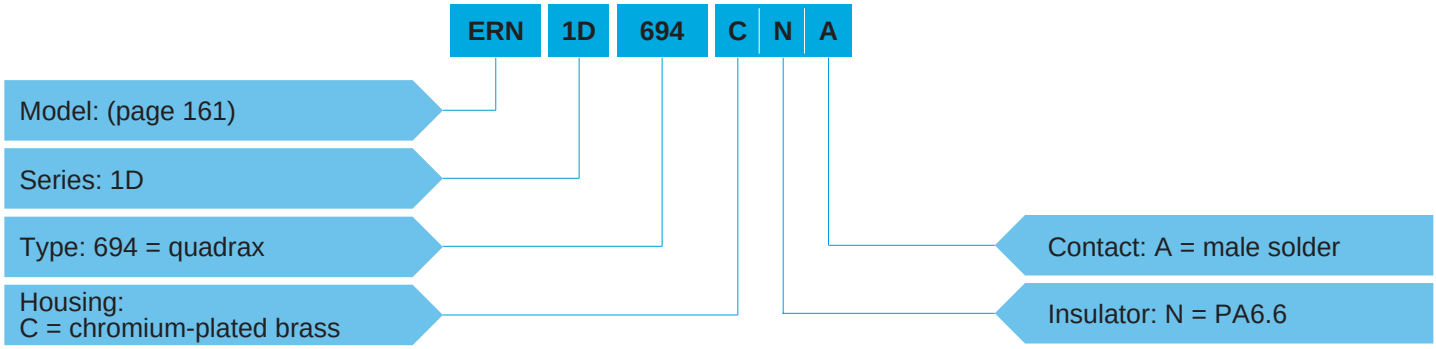

ERN.1D.694.CNA = Fixed socket, 1D series, quadrax type, outer shell in chrome-plated brass, PA6.6 insulator, male solder contacts.

Bridge plug

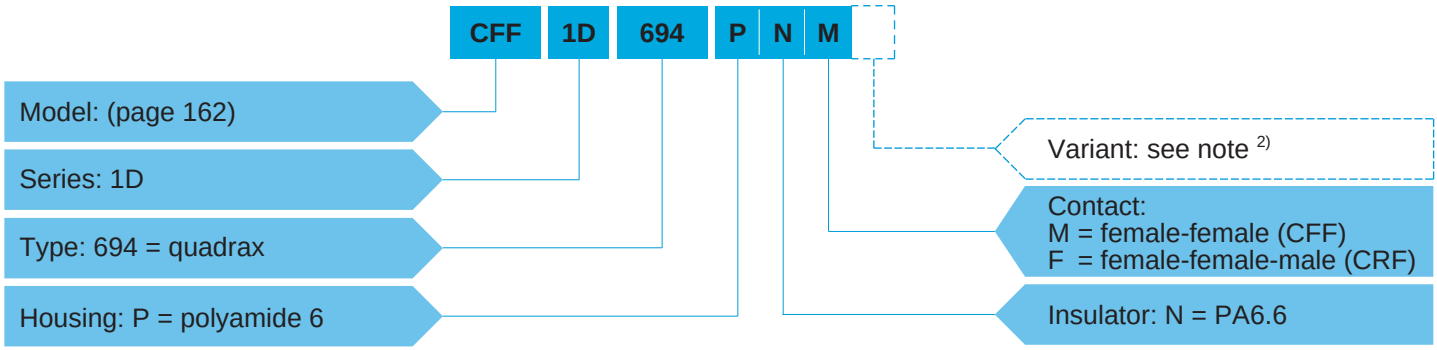

CFF.1D.694.PNM = bridge plug with two non-latching plugs, 1D series, quadrax type, outer shell in polyamide 6, PA6.6 insulator, female-female contacts, grey colour housing.

Note:
1) the «variant» position of the part number is used to specify the presence of a nut for fitting a bend relief, a «Z» should be indicated and a bend relief can be ordered separately as indicated in the «Accessories» section. An order for a connector with bend relief should thus include two references.
2) for bridge plugs the variant position indicates the housing colour (see page 163).

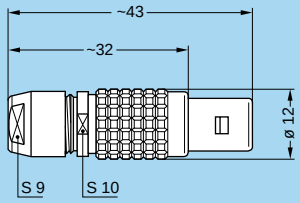

FFA Straight plug, cable collet

Part number
FFA.1D.694.CNLD42
FFA.1D.694.CNLD52
FFA.1D.694.CNLD62
FFA.1D.694.CNLD72
FFA.1D.694.CNLD76

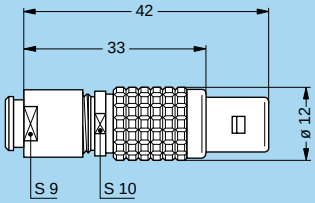

FFA Straight plug, cable collet and nut for fitting a bend relief

Part number
FFA.1D.694.CNLD42Z
FFA.1D.694.CNLD52Z
FFA.1D.694.CNLD62Z
FFA.1D.694.CNLD72Z

Note: the bend relief must be ordered separately (see page 175).

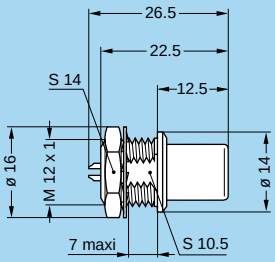

FAA Fixed plug, nut fixing, non-latching

Part number
FAA.1D.694.CNL

Panel cut-out (p. 164)

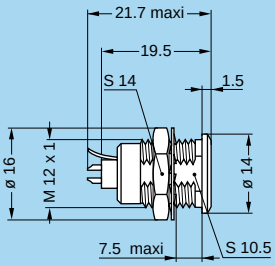

ERN Fixed socket nut fixing, with earthing tag

Part number
ERN.1D.694.CNA

Panel cut-out (page 164)

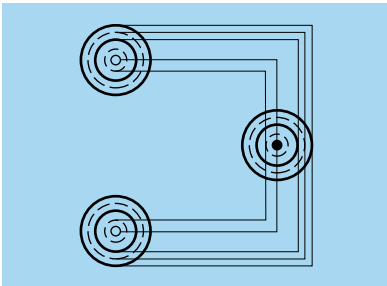

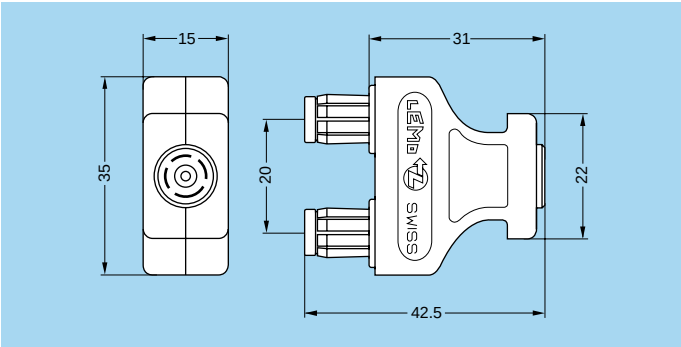

CFF Bridge plug with two non-latching plugs

CRF Bridge plug with two non-latching plugs with monitoring output

Part number
CFF.1D.694.PNMG
CRF.1D.694.PNFG

Note: the last letter (G) of the part number indicates the grey colour of the housing. For other colours, replace this letter (G) by the one corresponding to the required colour.

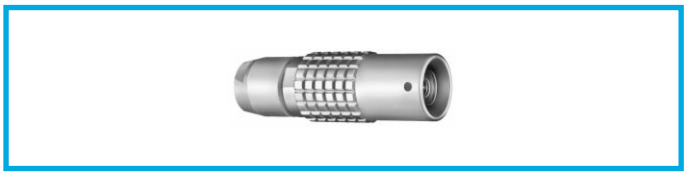

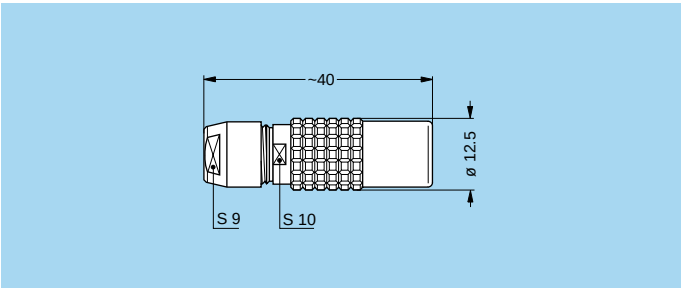

PCA Free socket, cable collet

Part number
PCA.1D.694.CNAD42
PCA.1D.694.CNAD52
PCA.1D.694.CNAD62
PCA.1D.694.CNAD72
PCA.1D.694.CNAD76

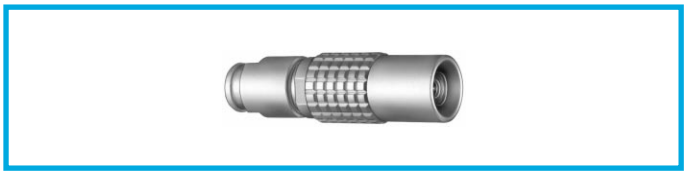

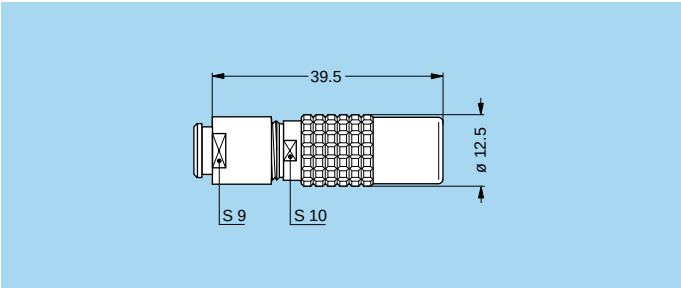

PCA Free socket, cable collet and nut for fitting a bend relief

Part number
PCA.1D.694.CNAD42Z
PCA.1D.694.CNAD52Z
PCA.1D.694.CNAD62Z
PCA.1D.694.CNAD72Z

Note: the bend relief must be ordered separately (see page 175).

Type

Male solder contacts	Female solder contacts	Reference	Number of contacts	Contact type	Test voltage (kV rms)[1) 2)]	Test voltage (kV dc)[1) 2)]	Rated current (A)[1)]
				Solder			
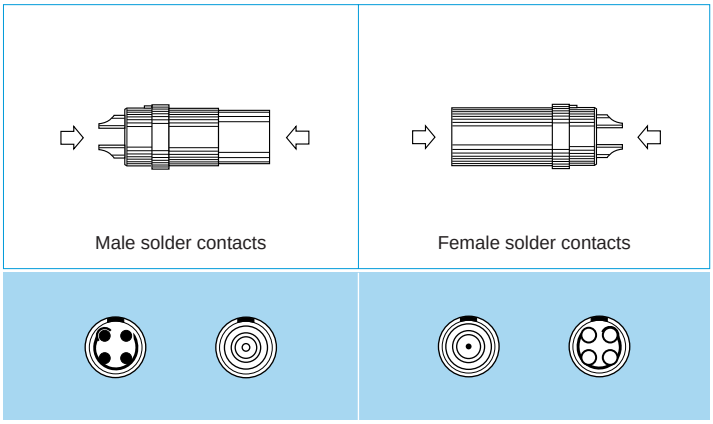		694	4	●	0.42	0.6	0.5

Note: 1) **see calculation method, caution and suggested standard on page 204.**
2) lowest measured value; contact to contact or contact to shell.

Collets

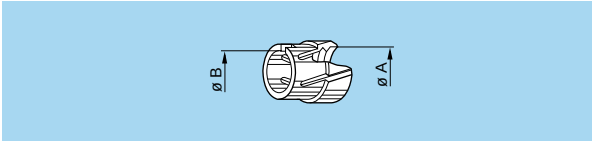

Reference		Collet ø		Cable ø		Part number of the collet [1)]
Type	ø	ø A	ø B	max.	min.	
D	42	4.2	–	4.0	3.1	FGG.1B.742.DN
D	52	5.2	–	5.0	4.1	FGG.1B.752.DN
D	62	6.2	–	6.0	5.1	FGG.1B.762.DN
D	72	7.2	6.7	7.0	6.1	FGG.1B.772.DN
D	76	7.6	6.7	7.5	7.1	FGG.1B.776.DN [2)]

Note:
1) for ordering collets separately.
2) these collets can not be used with connector models using a nut for fitting a bend relief.
All dimensions are in millimetres.

Variant

Bridge plug colours

Ref.	Colour
A	blue
B	white
G	grey
J	yellow

Ref.	Colour
M	brown
N	black
R	red
V	green

Note:
in standard version the letter G is not mentioned in the «variant» position and the grey colour is chosen by default.

Accessories and tooling for the 1D series are identical with the 1B series. Please refer to corresponding pages (page 167 and 183).

Panel cut-out

Panel cut-out

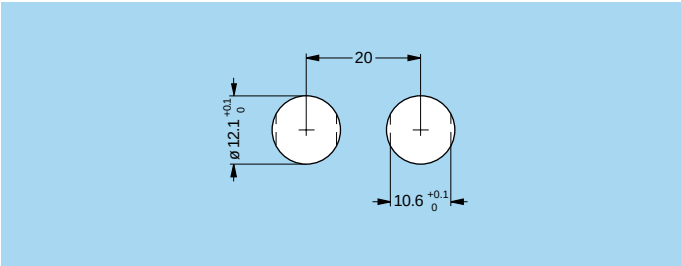

Note: mounting nut torque: 4.5 Nm (1N = 0.102 kg)
When connectors are assembled with double panel washers or insulating washers the mounting nut torque is 4 Nm.

Patch Panels

No more jacks ! ! but a modern and reliable connection system which guarantees total security. LEMO offers audio patch panels fitted with Push-Pull connectors ; this principle allows a reliable connection and avoids all risks of linkage interruption by pulling accidentally on the cable. This quality is even reinforced by the use of connectors with gold-plated contacts according to the ISO 4523 standard. Standard 19'' elements with various configurations are offered on panels with 1 or 2 units. Every connector row has a label holder for the identification of the signals. Our patch-panels have satin finish which is highly resistant to abrasion (standard colours black and grey) or a heat treated paint (standard colour beige, other colours available on request) or a natural anodized finishing, reflecting the quality of your applications.

P●● Patch panel for AUDIO application "Brought out only"

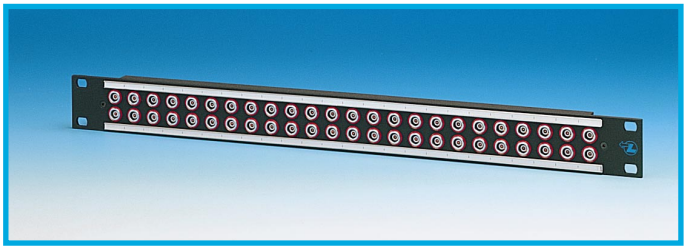

– 1 U panel, with one row of 30 insulated sockets of the 0B series (3 contacts) or 20 sockets of the 1B series (3 or 6 contacts).
– 1 U panel with two rows of 30 insulated sockets of the 0B series (3 contacts).
– 2 U panel with two rows of 20 insulated sockets of the 1B series (3 or 6 contacts) for Audio stereo applications.

Outputs on rear panel with LEMO 0B-1B series connectors of the corresponding type.

Front side connection

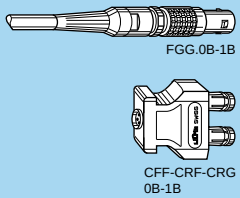

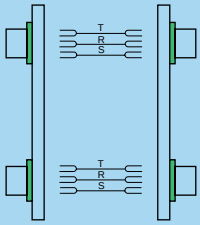

Rear side connection

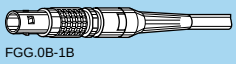

Part Number Example

P	A	G	1B	306	MG	1B	20

- Units: A = 1, B = 2
- Colour (see table below)
- Series: 0B - 1B
- Total number of connectors
- Rear side connection (see table below)
- Type (see table below)

Ref.	Colour
C	beige
G	grey
N	black
T	natural anodized

Type	Series	Type and rear side connection
303	0B	LEMO (Multi. 3 contacts)
303	1B	LEMO (Multi. 3 contacts)
306	1B	LEMO (Multi. 3-6 contacts)

P●● Patch panel for AUDIO application "Brought out only"

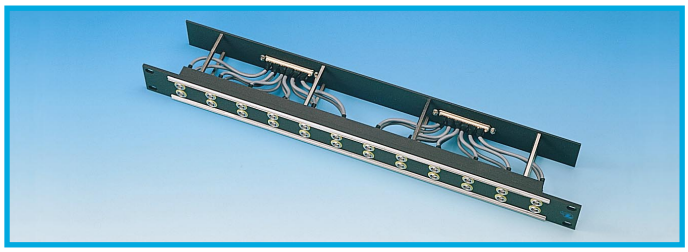

– 1 U panel, with one or two rows of 12, 24 or 30 insulated sockets of the 0B series (3 contacts) or 20 sockets of the 1B series (3 or 6 contacts) or 1D (quadrax) for Audio stereo applications.
– 2 U panel, with two rows of 20 insulated sockets of the 1B series (3 or 6 contacts) or 1D (quadrax) for Audio stereo applications.

Outputs on rear panel for cable or connector linkage with LEMO 5A series (36 contacts), Sub-D (37 contacts) or ELCO (90 contacts) connectors.

Front side connection

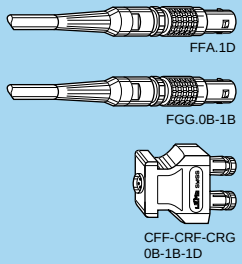

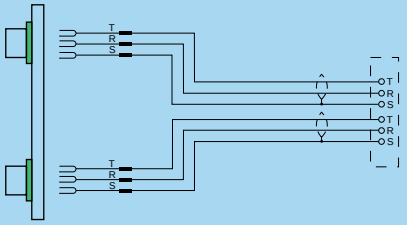

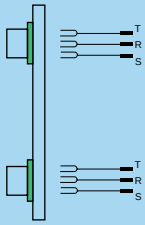

Rear side connection

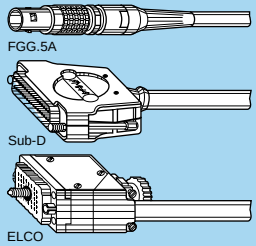

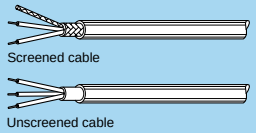

Part Number Example

P	A	C	0B	303	GG	5A	12

- Total number of connectors
- Rear side connection (see table below)
- ●● (see table below)
- Type (see table below)
- Units: A = 1, B = 2
- Colour (see table below)
- Series: 0B - 1B - 1D

Ref.	Colour
C	beige
G	grey
N	black
T	natural anodized

Type	●●	Series	Type
303	GG	0B	Multipole (3)
303	GG	1B	Multipole (3)
306	GG	1B	Multipole (6)
694	RN	1D	Quadrax

Ref.	Rear side connection
5A	LEMO (36 contacts)
SD	Sub-D (37 contacts)
EL	ELCO (90 contacts)
CA	Cable

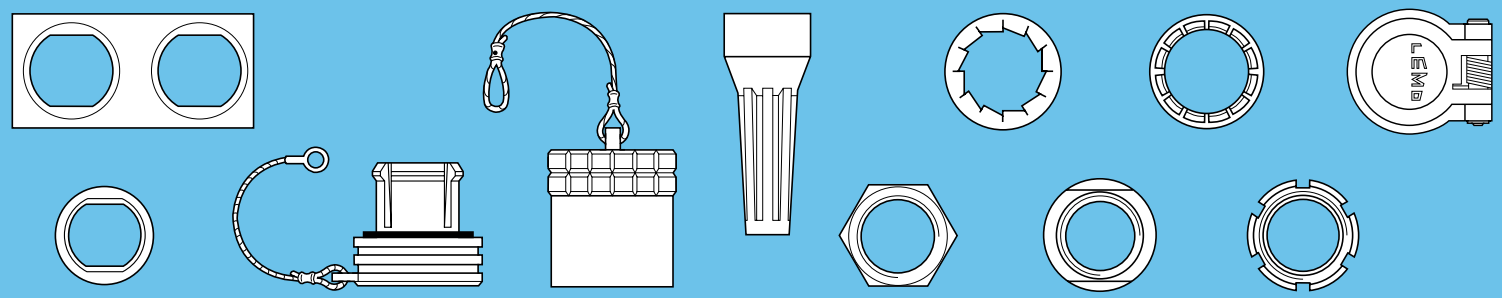

ACCESSORIES

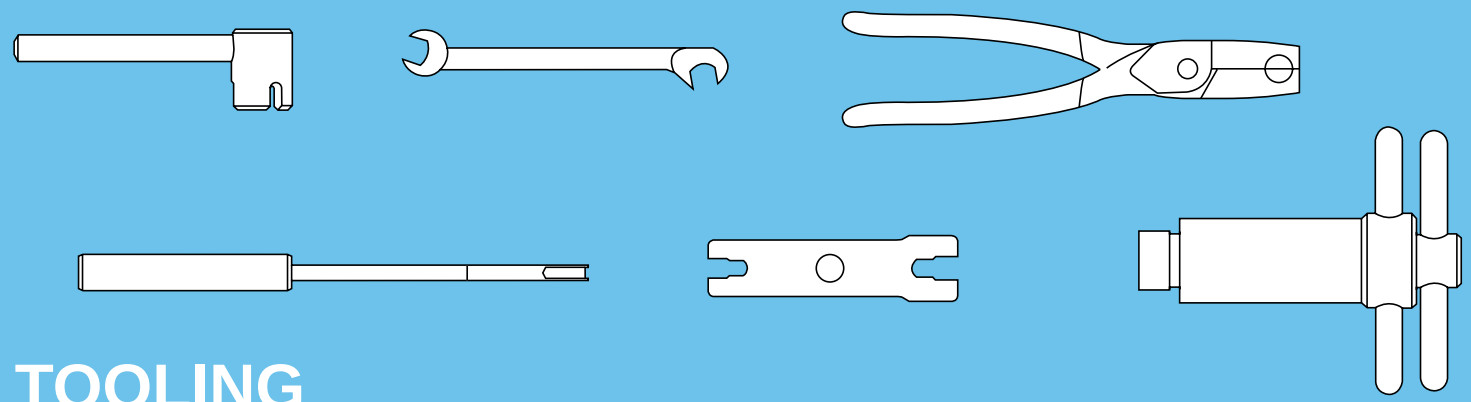

TOOLING

Accessories

male

female

FGG-EGG Insulators for crimp contacts

	Type	Insulator part number	
		Male contact	Female contact
00	302	FGG.00.302.YL	EGG.00.402.YL
	303	FGG.00.303.YL	EGG.00.403.YL
	304	FGG.00.304.YL	EGG.00.404.YL
0B 0K	302	FGG.0B.302.YL	EGG.0B.402.YL
	303	FGG.0B.303.YL	EGG.0B.403.YL
	304	FGG.0B.304.YL	EGG.0B.404.YL
	305	FGG.0B.305.YL	EGG.0B.405.YL
	306	FGG.0B.306.YL	EGG.0B.406.YL
	307	FGG.0B.307.YL	EGG.0B.407.YL
	309	FGG.0B.309.YL	EGG.0B.409.YL
1B 1K	302	FGG.1B.302.YL	EGG.1B.402.YL
	303	FGG.1B.303.YL	EGG.1B.403.YL
	304	FGG.1B.304.YL	EGG.1B.404.YL
	305	FGG.1B.305.YL	EGG.1B.405.YL
	306	FGG.1B.306.YL	EGG.1B.406.YL
	307	FGG.1B.307.YL	EGG.1B.407.YL
	308	FGG.1B.308.YL	EGG.1B.408.YL
	310	FGG.1B.310.YL	EGG.1B.410.YL
	314	FGG.1B.314.YL	EGG.1B.414.YL
	316	FGG.1B.316.YL	EGG.1B.416.YL
2B 2K	302	FGG.2B.302.YL	EGG.2B.402.YL
	303	FGG.2B.303.YL	EGG.2B.403.YL
	304	FGG.2B.304.YL	EGG.2B.404.YL
	305	FGG.2B.305.YL	EGG.2B.405.YL
	306	FGG.2B.306.YL	EGG.2B.406.YL
	307	FGG.2B.307.YL	EGG.2B.407.YL
	308	FGG.2B.308.YL	EGG.2B.408.YL
	310	FGG.2B.310.YL	EGG.2B.410.YL
	312	FGG.2B.312.YL	EGG.2B.412.YL
	314	FGG.2B.314.YL	EGG.2B.414.YL
	316	FGG.2B.316.YL	EGG.2B.416.YL
	318	FGG.2B.318.YL	EGG.2B.418.YL
	319	FGG.2B.319.YL	EGG.2B.419.YL
	326	FGG.2B.326.YL	EGG.2B.426.YL
	332	FGG.2B.332.YL	EGG.2B.432.YL
3B 3K	302	FGG.3B.302.YL	EGG.3B.402.YL
	303	FGG.3B.303.YL	EGG.3B.403.YL
	304	FGG.3B.304.YL	EGG.3B.404.YL
	305	FGG.3B.305.YL	EGG.3B.405.YL
	306	FGG.3B.306.YL	EGG.3B.406.YL
	307	FGG.3B.307.YL	EGG.3B.407.YL

	Type	Insulator part number	
		Male contact	Female contact
3B 3K	308	FGG.3B.308.YL	EGG.3B.408.YL
	309	FGG.3B.309.ML	EGG.3B.409.ML
	310	FGG.3B.310.YL	EGG.3B.410.YL
	312	FGG.3B.312.YL	EGG.3B.412.YL
	314	FGG.3B.314.YL	EGG.3B.414.YL
	316	FGG.3B.316.YL	EGG.3B.416.YL
	318	FGG.3B.318.YL	EGG.3B.418.YL
	320	FGG.3B.320.YL	EGG.3B.420.YL
	322	FGG.3B.322.YL	EGG.3B.422.YL
	324	FGG.3B.324.YL	EGG.3B.424.YL
	326	FGG.3B.326.YL	EGG.3B.426.YL
	330	FGG.3B.330.YL	EGG.3B.430.YL
4B 4K	304	FGG.4B.304.ML	EGG.4B.404.ML
	306	FGG.4B.306.YL	EGG.4B.406.YL
	307	FGG.4B.307.ML	EGG.4B.407.ML
	310	FGG.4B.310.YL	EGG.4B.410.YL
	312	FGG.4B.312.YL	EGG.4B.412.YL
	316	FGG.4B.316.YL	EGG.4B.416.YL
	320	FGG.4B.320.ML	EGG.4B.420.ML
	324	FGG.4B.324.YL	EGG.4B.424.YL
	330	FGG.4B.330.YL	EGG.4B.430.YL
	340	FGG.4B.340.YL	EGG.4B.440.YL
5B 5K	304	FGG.5B.304.ML	EGG.5B.404.ML
	310	FGG.5B.310.YL	EGG.5B.410.YL
	314	FGG.5B.314.YL	EGG.5B.414.YL
	316	FGG.5B.316.YL	EGG.5B.416.YL
	320	FGG.5B.320.YL	EGG.5B.420.YL
	330	FGG.5B.330.YL	EGG.5B.430.YL
	340	FGG.5B.340.YL	EGG.5B.440.YL
	348	FGG.5B.348.YL	EGG.5B.448.YL
	350	FGG.5B.350.ML	EGG.5B.450.ML
	354	FGG.5B.354.YL	EGG.5B.454.YL
	364	FGG.5B.364.YL	EGG.5B.464.YL

Note: each insulator can be used both for crimp contacts of normal shape (fig. 1) or with reduced solder cups (fig. 2) as shown on page 170.

FGG-EGG Crimp contacts

Fig. 1

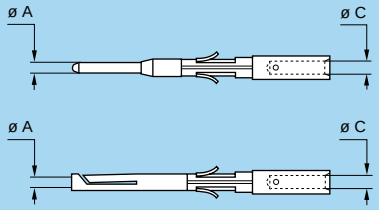

Fig. 2

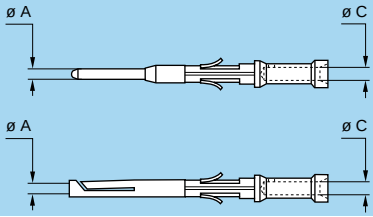

	Types	ø A (mm)	ø C (mm)	Contact part number	
				Male	Female
00	302	0.5	0.45	FGG.00.554.ZZC	EGG.00.654.ZZM
	303	0.5	0.45	FGG.00.554.ZZC	EGG.00.654.ZZM
	304	0.5	0.45	FGG.00.554.ZZC	EGG.00.654.ZZM
0B 0K	302/303	0.9	1.10	FGG.0B.560.ZZC	EGG.0B.660.ZZM
	304/305	0.7	0.80	FGG.0B.555.ZZC	EGG.0B.655.ZZM
	306/307/309	0.5	0.45	FGG.0B.554.ZZC	EGG.0B.654.ZZM
0S	302	0.9	1.10	FGG.0B.560.ZZC	EGG.0B.660.ZZM
1B 1K	302/303	1.3	1.40	FGG.1B.565.ZZC	EGG.1B.665.ZZM
	304/305	0.9	1.10	FGG.1B.560.ZZC	EGG.1B.660.ZZM
	306/307/308	0.7	0.80	FGG.1B.555.ZZC	EGG.1B.655.ZZM
	310/314/316	0.5	0.45	FGG.1B.554.ZZC	EGG.1B.654.ZZM
1S	302	1.3	1.40	FGG.1B.565.ZZC	EGG.1B.665.ZZM
	304	0.9	1.10	FGG.1B.560.ZZC	EGG.1B.660.ZZM
2B 2K	302	2.0	2.40	FGG.2B.575.ZZC	EGG.2B.675.ZZM
	303	1.6	1.90	FGG.2B.570.ZZC	EGG.2B.670.ZZM
	304/305	1.3	1.40	FGG.2B.565.ZZC	EGG.2B.665.ZZM
	306/307	1.3	1.40	FGG.2B.565.ZZC	EGG.2B.665.ZZM
	308/310	0.9	1.10	FGG.2B.560.ZZC	EGG.2B.660.ZZM
	312/314/316	0.7	0.80	FGG.2B.555.ZZC	EGG.2B.655.ZZM
	318/319	0.7	0.80	FGG.2B.555.ZZC	EGG.2B.655.ZZM
	326/332	0.5	0.45	FGG.2B.554.ZZC	EGG.2B.654.ZZM
2S	306	1.3	1.40	FGG.2B.565.ZZC	EGG.2B.665.ZZM
3B 3K	302	3.0	2.90	FGG.3B.580.ZZC	EGG.3B.680.ZZM
	303/304/309	2.0	2.40	FGG.3B.575.ZZC	EGG.3B.675.ZZM
	305/306/307	1.6	1.90	FGG.3B.570.ZZC	EGG.3B.670.ZZM
	308/309/310	1.3	1.40	FGG.3B.565.ZZC	EGG.3B.665.ZZM
	312/314	0.9	1.10	FGG.3B.560.ZZC	EGG.3B.660.ZZM
	316/318	0.9	1.10	FGG.3B.560.ZZC	EGG.3B.660.ZZM
	320/322/324	0.7	0.80	FGG.3B.555.ZZC	EGG.3B.655.ZZM
	326/330	0.7	0.80	FGG.3B.555.ZZC	EGG.3B.655.ZZM
4B 4K	304	3.0	2.90	FGG.4B.580.ZZC	EGG.4B.680.ZZM
	306/307	2.0	2.40	FGG.4B.575.ZZC	EGG.4B.675.ZZM
	310	1.6	1.90	FGG.4B.570.ZZC	EGG.4B.670.ZZM
	312	1.3	1.40	FGG.4B.565.ZZC	EGG.4B.665.ZZM
	316/320	0.9	1.10	FGG.4B.560.ZZC	EGG.4B.660.ZZM
	324/330	0.9	1.10	FGG.4B.560.ZZC	EGG.4B.660.ZZM
	340	0.7	0.80	FGG.4B.555.ZZC	EGG.4B.655.ZZM
5B 5K	304	4.0	4.00	FGG.5B.582.ZZC	EGG.5B.682.ZZM
	310	3.0	2.90	FGG.5B.580.ZZC	EGG.5B.680.ZZM
	314/316	2.0	2.40	FGG.5B.575.ZZC	EGG.5B.675.ZZM
	320	1.6	1.90	FGG.5B.570.ZZC	EGG.5B.670.ZZM
	330/340/348	1.3	1.40	FGG.5B.565.ZZC	EGG.5B.665.ZZM
	350/354/364	0.9	1.10	FGG.5B.560.ZZC	EGG.5B.660.ZZM

	Types	ø A (mm)	ø C (mm)	Contact part number	
				Male	Female
0B 0K	302/303	0.9	0.80	FGG.0B.561.ZZC	EGG.0B.661.ZZM
	302/303	0.9	0.45	FGG.0B.562.ZZC	EGG.0B.662.ZZM
	304/305	0.7	0.45	FGG.0B.556.ZZC	EGG.0B.656.ZZM
0S	302	0.9	0.80	FGG.0B.561.ZZC	EGG.0B.661.ZZM
	302	0.9	0.45	FGG.0B.562.ZZC	EGG.0B.662.ZZM
1B 1K	302/303	1.3	1.10	FGG.1B.566.ZZC	EGG.1B.666.ZZM
	304/305	0.9	0.80	FGG.1B.561.ZZC	EGG.1B.661.ZZM
	306/307/308	0.7	0.45	FGG.1B.556.ZZC	EGG.1B.656.ZZM
1S	302	1.3	1.10	FGG.1B.566.ZZC	EGG.1B.666.ZZM
	304	0.9	0.80	FGG.1B.561.ZZC	EGG.1B.661.ZZM
2B 2K	302	2.0	1.90	FGG.2B.576.ZZC	EGG.2B.676.ZZM
	303	1.6	1.40	FGG.2B.571.ZZC	EGG.2B.671.ZZM
	304/305	1.3	1.10	FGG.2B.566.ZZC	EGG.2B.666.ZZM
	306/307	1.3	1.10	FGG.2B.566.ZZC	EGG.2B.666.ZZM
	304/305	1.3	0.80	FGG.2B.567.ZZC	EGG.2B.667.ZZM
	306/307	1.3	0.80	FGG.2B.567.ZZC	EGG.2B.667.ZZM
	308/310	0.9	0.80	FGG.2B.561.ZZC	EGG.2B.661.ZZM
	308/310	0.9	0.45	FGG.2B.562.ZZC	EGG.2B.662.ZZM
	312/314/316	0.7	0.45	FGG.2B.556.ZZC	EGG.2B.656.ZZM
	318/319	0.7	0.45	FGG.2B.556.ZZC	EGG.2B.656.ZZM
2S	306	1.3	1.10	FGG.2B.566.ZZC	EGG.2B.666.ZZM
	306	1.3	0.80	FGG.2B.567.ZZC	EGG.2B.667.ZZM
3B 3K	303/304/309	2.0	1.90	FGG.3B.576.ZZC	EGG.3B.676.ZZM
	305/306/307	1.6	1.40	FGG.3B.571.ZZC	EGG.3B.671.ZZM
	308/309/310	1.3	1.10	FGG.3B.566.ZZC	EGG.3B.666.ZZM
	312/314	0.9	0.80	FGG.3B.561.ZZC	EGG.3B.661.ZZM
	316/318	0.9	0.80	FGG.3B.561.ZZC	EGG.3B.661.ZZM
	320/322/324	0.7	0.45	FGG.3B.556.ZZC	EGG.3B.656.ZZM
	326/330	0.7	0.45	FGG.3B.556.ZZC	EGG.3B.656.ZZM
4B 4K	306/307	2.0	1.90	FGG.4B.576.ZZC	EGG.4B.676.ZZM
	310	1.6	1.40	FGG.4B.571.ZZC	EGG.4B.671.ZZM
	312	1.3	1.10	FGG.4B.566.ZZC	EGG.4B.666.ZZM
	316/320	0.9	0.80	FGG.4B.561.ZZC	EGG.4B.661.ZZM
	324/330	0.9	0.80	FGG.4B.561.ZZC	EGG.4B.661.ZZM
	340	0.7	0.45	FGG.4B.556.ZZC	EGG.4B.656.ZZM
5B 5K	314/316	2.0	1.90	FGG.5B.576.ZZC	EGG.5B.676.ZZM
	320	1.6	1.40	FGG.5B.571.ZZC	EGG.5B.671.ZZM
	330/340/348	1.3	1.10	FGG.5B.566.ZZC	EGG.5B.666.ZZM
	350/354/364	0.9	0.80	FGG.5B.561.ZZC	EGG.5B.661.ZZM

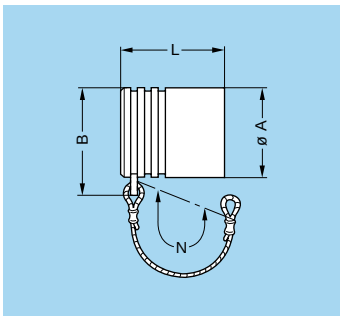

BFG Plug caps

Part number	Series	Dimensions (mm)			
		A	B	L	N
BFG.00.100 PCSG	00	7.5	10	10.0	60
BFG.0B.100.PCSG	0S-0B	9.5	12	12.2	85
BFG.1B.100.PCSG	1S-1B 1D	12.0	15	13.8	85
BFG.2B.100.PCSG	2S-2B	15.0	18	15.0	85
BFG.3B.100.PCSG	3S-3B	18.5	22	18.5	95

- Body material: Polyoxymethylene (POM) grey (or black)
- Cord material: Polyamide 6, white (or black)
- Gasket material: Silicone rubber
- Maximum operating temperature: 100°C
- Watertightness: IP61 according to IEC 60529

Note: this cap is available only with an alignment key (G). Upon request this cap can be supplied in black and the last letter «G» of the part number should be replaced with «N».

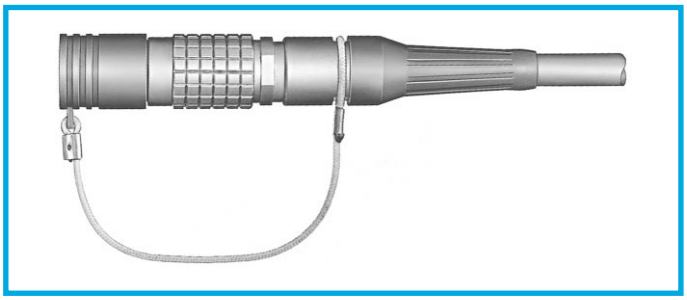

Fitting the cord

Slide the plug into the loop of the cord. Place the loop into the groove in front of the collet nut and tighten the loop.

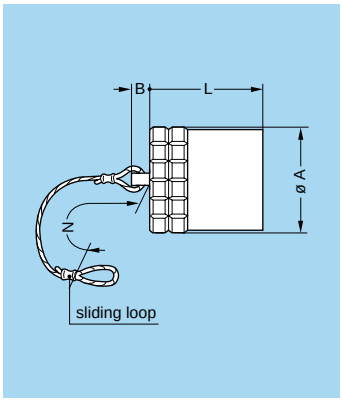

BFA Plug caps

Part number	Series	Dimensions (mm)			
		A	B	L	N
BFA.0E.100.NAS	0E	14.0	6	15.0	85
BFA.1E.100.NAS	1E	16.0	6	18.0	85
BFA.2E.100.NAS	2E	19.5	6	20.0	85
BFA.3E.100.NAS	3E	23.0	6	24.0	120
BFA.4E.100.NAS	4E	29.0	10	24.5	120
BFA.4S.100.NAS	4S	25.0	10	22.0	120
BFA.5E.100.NAS	5E	44.0	10	29.0	150
BFA.5S.100.NAS	5S	36.0	10	30.0	150
BFA.6S.100.NAS	6S	46.0	10	33.0	150

- Body material: Nickel-plated brass (Ni 3µm)
- Lanyard material: Stainless steel
- Crimp ferrule material: Nickel-plated brass + polyolefin
- O-ring material: Silicone rubber or FPM
- Maximum operating temperature: 135°C
- Watertightness: IP68 according to IEC 60529 for E series

Note: the last letter «S» of the part number corresponds to the alignment key of the plug. The last letter «S» of the part number stands for the material of the O-ring (silicone rubber). O-ring's made from FPM are also available; if required, replace the letter «S» by «V».

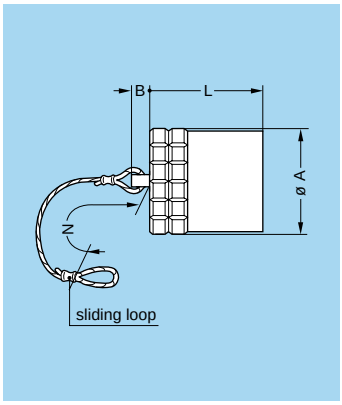

BFG Plug caps with key (G)

Part number	Series	Dimensions (mm)			
		A	B	L	N
BFG.0K.100.NAS	0K	14.0	6	15.0	85
BFG.1K.100.NAS	1K	16.0	6	18.0	85
BFG.2K.100.NAS	2K	19.5	6	20.0	85
BFG.3K.100.NAS	3K	23.0	6	24.0	120
BFG.4B.100.NAS	4B	25.0	10	20.0	120
BFG.4K.100.NAS	4K	29.0	10	24.5	120
BFG.5B.100.NAS	5B	36.0	10	27.0	150
BFG.5K.100.NAS	5K	44.0	10	29.0	150
BFG.6E.100.NAS	6E	54.0	10	34.0	150

- Body material: Nickel-plated brass (Ni 3µm)
- Lanyard material: Stainless steel
- Crimp ferrule material: Nickel-plated brass + polyolefin
- O-ring material: Silicone rubber or FPM
- Maximum operating temperature: 135°C
- Watertightness: IP68 according to IEC 60529 for E and K series

Note: this cap is available only with an alignment key (G). The last letter «S» of the part number corresponds to the alignment key of the plug. The last letter «S» of the part number stands for the material of the O-ring (silicone rubber). O-ring's made from FPM are also available; if required, replace the letter «S» by «V».

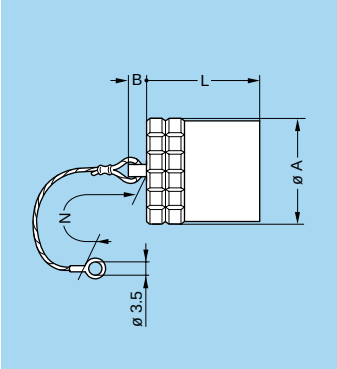

BHG Plug caps, nut fixing or flange

Part number	Series	Dimensions (mm)			
		A	B	L	N
BHG.0K.100.NAS	0K	14.0	6	15.0	85
BHG.1K.100.NAS	1K	16.0	6	18.0	85
BHG.2K.100.NAS	2K	19.5	6	20.0	85
BHG.3K.100.NAS	3K	23.0	6	24.0	120
BHG.4B.100.NAS	4B	25.0	10	20.0	120
BHG.4K.100.NAS	4K	29.0	10	24.5	120
BHG.5B.100.NAS	5B	36.0	10	27.0	150
BHG.5K.100.NAS	5K	44.0	10	29.0	150
BHG.6E.100.NAS	6E	54.0	10	34.0	150

- Body material: Nickel-plated brass (Ni 3µm)
- Lanyard material: Stainless steel
- Crimp ferrule material: Nickel-plated brass + polyolefin
- O-ring material: Silicone rubber or FPM
- Maximum operating temperature: 135°C
- Watertightness: IP68 according to IEC 60529 for E and K series

Note: this cap is available only with an alignment key (G). The last letter «S» of the part number corresponds to the alignment key of the plug. The last letter «S» of the part number stands for the material of the O-ring (silicone rubber). O-ring's made from FPM are also available; if required, replace the letter «S» by «V».

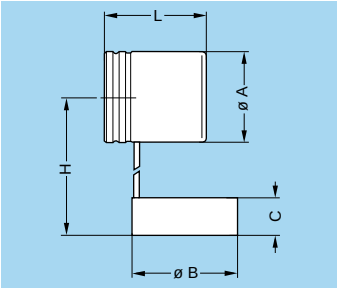

BFA Plug cap

Part number	Series	Dimensions (mm)				
		A	B	C	H	L
BFA.3K.170.800EN	3K-3E	24	28	10	80	27

- Material: black EPDM

Note: these caps are suitable for use with any alignment key configuration.

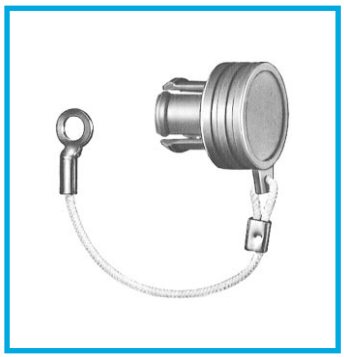

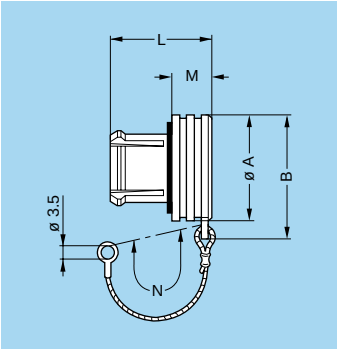

BRA Blanking caps for fixed sockets and free straight sockets

Part number	Series	Dimensions (mm)				
		A	B	L	M	N
BRA.00.200.PCSG	00	7.5	10.0	8.2	2.7	60
BRA.0B.200.PCSG	0S-0B	10.0	12.5	11.0	4.8	60
BRA.1B.200.PCSG	1S-1B 1D	14.0	17.0	13.5	5.6	60
BRA.2B.200.PCSG	2S-2B 2C-2G	18.0	21.0	14.5	6.0	60
BRA.3B.200.PCSG	3S-3B	22.0	25.5	17.0	7.0	60

- Body material: Polyoxymethylene (POM) grey (or black)
- Cord material: Polyamide 6, white (or black)
- Gasket material: Silicone rubber
- Maximum operating temperature: 100°C
- Watertightness: IP61 according to IEC 60529

Note: these caps are suitable for use with any alignment key configuration. On request this cap can be supplied in black. If so, replace the last letter «G» of the part number by «N».

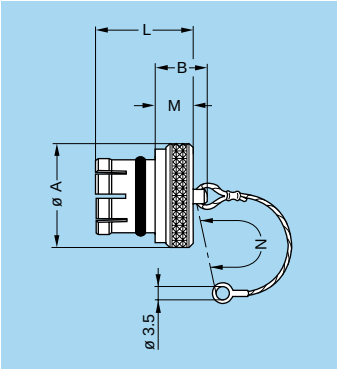

BRE Blanking caps for fixed and free sockets

Part number	Series	Dimensions (mm)				
		A	B	L	M	N
BRE.00.200.NAS	00	8	9.5	8.8	3.5	60
BRE.0S.200.NAS	0S-0B	10	10.5	10.5	4.5	85
BRE.1S.200.NAS	1S-1B 1D	14	11.0	12.5	5.0	85
BRE.2S.200.NAS	2S-2B	18	12.0	14.0	6.0	85
BRE.3S.200.NAS	3S-3B	22	14.0	18.0	8.0	120
BRE.4S.200.NAS	4S-4B	28	20.0	23.0	10.0	120
BRE.5S.200.NAS	5S-5B	40	22.0	30.0	12.0	150
BRE.6S.200.NAS	6S	54	22.0	30.0	12.0	150
BRE.6E.200.NAS	6E	57	24.0	31.5	14.0	150

- Body material: Nickel-plated brass (Ni 3 µm)
- Lanyard material: Stainless steel
- Crimp ferrule material: Nickel-plated brass + polyolefin
- O-ring material: Silicone rubber or FPM
- Maximum operating temperature: 135°C
- Watertightness: IP61 according to IEC 60529

Note: these caps are suitable for use with any alignment key configuration. The last letter «S» of the part number stands for the O-ring material (silicone rubber). O-ring's made from FPM are also available; if required, replace the letter «S» by «V».

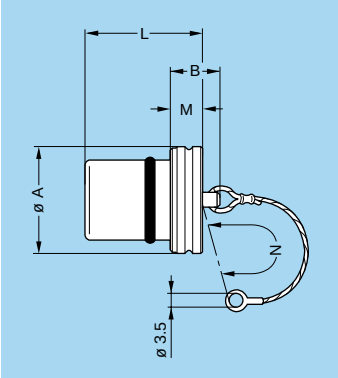

- Body material: Nickel-plated brass (Ni 3 µm)
- Lanyard material: Stainless steel
- Crimp ferrule material: Nickel-plated brass + polyolefines
- O-ring material: Silicone rubber or FPM
- Maximum operating temperature: 135°C
- Watertightness: IP68 according to IEC 60529

BRE Blanking caps for fixed and free sockets

Part number	Series	Dimensions (mm)				
		A	B	L	M	N
BRE.0K.200.NAS	0K-0E	15.0	10	15.0	4	85
BRE.1K.200.NAS	1K-1E	17.0	12	20.0	6	85
BRE.2K.200.NAS	2K-2E	20.5	14	24.0	8	85
BRE.3K.200.NAS	3K-3E	24.0	14	28.0	8	120
BRE.4K.200.NAS	4K-4E	30.0	20	30.5	10	120
BRE.5K.200.NAS	5K-5E	44.0	22	37.0	12	150

Note: these caps are suitable for use with any alignment key configuration. The last letter «S» of the part number stands for the O-ring material (silicone rubber). O-ring's made from FPM are also available; if required, replace the letter «S» by «V».

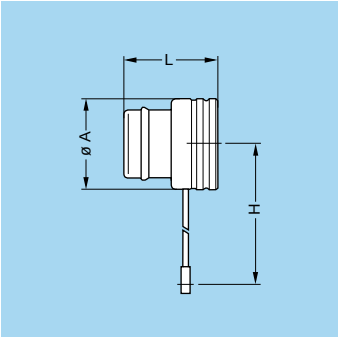

BRA Blanking cap for free sockets

Part number	Series	Dimensions (mm)		
		A	H	L
BRA.3K.100.715EN	3K-3E	24	80	25

- Material: black EPDM

Note: these caps are suitable for use with any alignment key configuration.

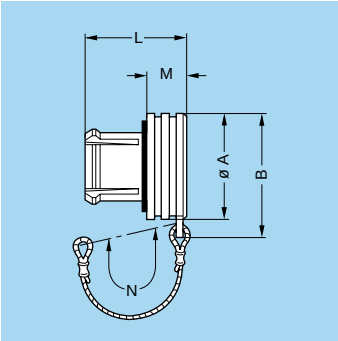

- Body material: Polyoxymethylene (POM) grey (or black)
- Cord material: Polyamide 6, white (or black)
- Gasket material: Silicone rubber
- Maximum operating temperature: 100°C
- Watertightness: IP61 according to IEC 60529

BRD Blanking caps for free sockets

Part number	Series	Dimensions (mm)				
		A	B	L	M	N
BRD.00.200.PCSG	00	7.5	10.0	8.2	2.7	60
BRD.0B.200.PCSG	0S-0B	10.0	12.5	11.0	4.8	85
BRD.1B.200.PCSG	1S-1B 1D	14.0	17.0	13.5	5.6	85
BRD.2B.200.PCSG	2S-2B	18.0	21.0	14.5	6.0	85
BRD.3B.200.PCSG	3S-3B	22.0	25.5	17.0	7.0	95

Note: on request this cap is available in black. If required, replace the last letter «G» of the part number by «N».

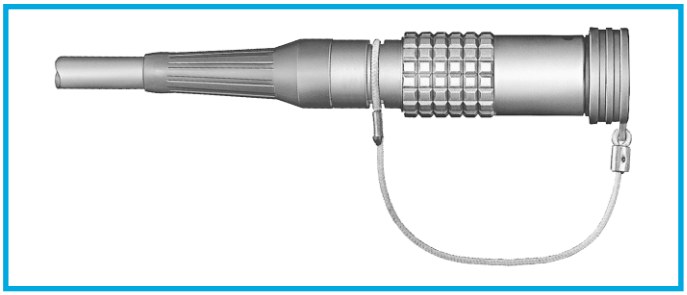

Fitting the cord

Slide the socket into the loop of the cord.
Place the loop into the groove in front of the collet nut.
Tighten the loop.

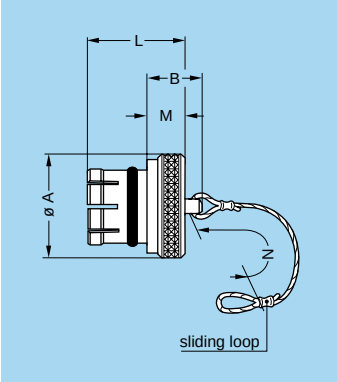

BRF Blanking caps for free sockets

Part number	Series	Dimensions (mm)				
		A	B	L	M	N
BRF.00.200.NAS	00	8	9.5	8.8	3.5	85
BRF.0S.200.NAS	0S-0B	10	10.5	10.5	4.5	85
BRF.1S.200.NAS	1S-1B 1D	14	11.0	12.5	5.0	85
BRF.2S.200.NAS	2S-2B	18	12.0	14.0	6.0	85
BRF.3S.200.NAS	3S-3B	22	14.0	18.0	8.0	120
BRF.4S.200.NAS	4S-4B	28	20.0	23.0	10.0	120
BRF.5S.200.NAS	5S-5B	40	22.0	30.0	12.0	150
BRF.6S.200.NAS	6S	54	22.0	30.0	12.0	150

- Body material: Nickel-plated brass (Ni 3 µm)
- Lanyard material: Stainless steel
- Crimp ferrule material: Nickel-plated brass + polyolefin
- O-ring material: Silicone rubber or FPM
- Maximum operating temperature: 135°C
- Watertightness: IP61 according to IEC 60529

Note: these caps are suitable for use with any alignment key configuration. The last letter «S» of the part number stands for the O-ring material (silicone rubber). O-ring's made from FPM are also available; if required, replace the letter «S» by «V».

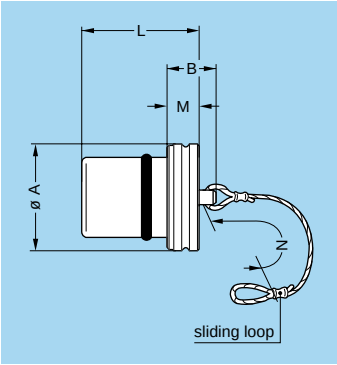

BRF Blanking caps for free sockets

Part number	Series	Dimensions (mm)				
		A	B	L	M	N
BRF.0K.200.NAS	0K-0E	15.0	10	15.0	4	85
BRF.1K.200.NAS	1K-1E	17.0	12	20.0	6	85
BRF.2K.200.NAS	2K-2E	20.5	14	24.0	8	85
BRF.3K.200.NAS	3K-3E	24.0	14	28.0	8	120
BRF.4K.200.NAS	4K-4E	30.0	20	30.5	10	120
BRF.5K.200.NAS	5K-5E	44.0	22	37.0	12	150

Note: these caps are suitable for use with any alignment key configuration. The last letter «S» of the part number stands for the O-ring material (silicone rubber). O-ring's made from FPM are also available; if required, replace the letter «S» by «V».

- Body material: Nickel-plated brass (Ni 3 µm)
- Lanyard material: Stainless steel
- Crimp ferrule material: Nickel-plated brass + polyolefin
- O-ring material: Silicone rubber or FPM

- Maximum operating temperature: 135°C
- Watertightness: IP68 according to IEC 60529

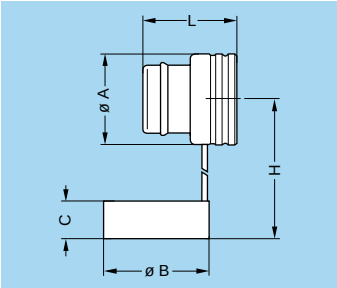

BRD Blanking caps for free sockets

Part number	Series	Dimensions (mm)				
		A	B	C	H	L
BRD.3K.170.800EN	3K-3E	24	28	10	80	25

- Material: black EPDM

Note: these caps are suitable for use with any alignment key configuration.

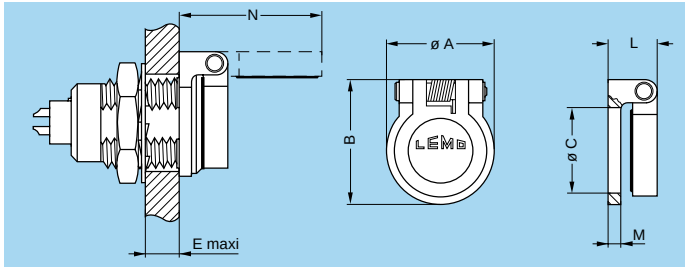

BRR Spring loaded dust caps for ERA, ERN and EG● sockets or PSA and PK● fixed sockets

Part number	Series	Dimensions (mm)						
		A	B	C	E	L	M	N
BRR.0S.200.PZSG	0S-0B	11.0	13.3	9.0	5.8	5.0	1.2	15.3
BRR.1S.200.PZSG	1S-1B 1D	14.2	17.1	12.0	6.0	6.3	1.5	20.3
BRR.2S.200.PZSG	2S-2B 2C-2G	18.6	22.4	15.2	6.5	8.2	2.0	26.2
BRR.3S.200.PZSG	3S-3B	22.5	26.5	18.2	9.0	8.8	2.5	30.8
BRR.3K.200.PZSG	3K	29.0	27.5	23.0	9.0	7.7	3.0	29.2

Note: on request, this cap is available in black. If so replace the last letter «G» of the part number by «N».

- Body material: Polyoxymethylene (POM) grey (or black)
- Gasket material: Silicone rubber

- Spring material: Stainless steel
- Maximum operating temperature: 100°C
- Watertightness: IP61 according to IEC 60529

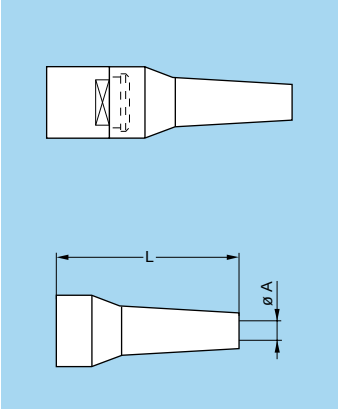

GM● Bend relief (Polyurethane)

A bend relief made from thermoplastic polyurethane elastomer (Desmopan 786) can be fitted over LEMO plugs and sockets that are supplied with nut for fitting such bend relief. They are available in nine different colours that match with the GRA insulating washers (see page 178).
Use the part numbers shown below to order this accessory separately.

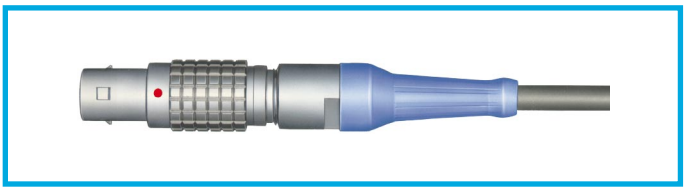

Main characteristics

- Material: Polyurethane elastomer
- Temperature range in dry atmosphere: -40°C +80°C

Part number	Dimensions (mm)				Series	Part number of nut for fitting the bend relief	Note
	Bend relief		Cable ø				
	A	L	max.	min.			
GMA.00.012.DG	1.2	22	1.4	1.1	00	FFM.00.130.LC 1) FFM.00.131.LC 2)	1) For unipole connectors 2) For multipole connectors The «GMD» are thin bend reliefs (for very flexible cables)
GMA.00.018.DG	1.8	22	2.1	1.8			
GMB.00.025.DG	2.5	22	2.8	2.5			
GMB.00.028.DG	2.8	22	3.1	2.8			
GMB.00.032.DG	3.2	22	3.5	3.2			
GMD.00.025.DG	2.5	22	2.8	2.5			
GMD.00.028.DG	2.8	22	3.1	2.8			
GMD.00.032.DG	3.2	22	3.5	3.2			
GMA.0B.025.DG	2.5	24	2.9	2.5	0B	FFM.0B.130.LC FFM.2B.132.LC 1)	1) For use only with connectors from series 2B equipped with cable fixing type M and where a bend relief from series 0B is used.
GMA.0B.030.DG	3.0	24	3.4	3.0			
GMA.0B.035.DG	3.5	24	3.9	3.5	0S	FFM.0S.130.LC	
GMA.0B.040.DG	4.0	24	4.4	4.0	0E-0K	FFM.0E.130.LC	
GMA.0B.045.DG	4.5	24	5.2	4.5			
GMA.1B.025.DG	2.5	30	2.9	2.5	1B-1D	FFM.1B.130.LC FFM.3B.131.LC 1)	1) For use only with connectors from series 3B equipped with cable fixing type M and where a bend relief from series 1B is used.
GMA.1B.030.DG	3.0	30	3.4	3.0			
GMA.1B.035.DG	3.5	30	3.9	3.5	1S	FFM.1S.130.LC	
GMA.1B.040.DG	4.0	30	4.4	4.0			
GMA.1B.045.DG	4.5	30	4.9	4.5			
GMA.1B.054.DG	5.4	30	6.0	5.4	1E-1K	FFM.1E.130.LC	
GMA.1B.065.DG	6.5	30	7.0	6.5			
GMA.2B.040.DG	4.0	36	4.5	4.0	2B	FFM.2B.130.LC FFM.4B.132.LC 1)	1) For use only with connectors from series 4B equipped with cable fixing type M and where a bend relief from series 2B is used.
GMA.2B.045.DG	4.5	36	5.0	4.5			
GMA.2B.050.DG	5.0	36	5.5	5.0	2S	FFM.2S.130.LC	
GMA.2B.060.DG	6.0	36	6.5	6.0	2E-2K	FFM.2E.130.LC	
GMA.2B.070.DG	7.0	36	7.7	7.0	2C-2G	FFM.2C.130.LC	
GMA.2B.080.DG	7.8	36	8.8	7.8			
GMA.3B.050.DG	4.5	42	5.2	4.5	3S	FFM.3S.130.LC	
GMA.3B.070.DG	7.0	42	7.9	7.0	3B	FFM.3B.130.LC	
GMA.3B.080.DG	8.0	42	8.9	8.0	3E-3K	FFM.3E.130.LC	
GMA.3B.090.DG	9.0	42	10.0	9.0	4S	FFM.4S.130.LC	
GMA.4B.080.DG	8.0	60	9.0	8.0	4S	FFM.4S.130.LC	
GMA.4B.010.DG	10.0	60	10.9	10.0			
GMA.4B.011.DG	11.0	60	11.9	11.0	4B	FFM.4B.130.LC	
GMA.4B.012.DG	12.0	60	13.0	12.0	4E-4K	FFM.4E.130.LC	
GMA.4B.013.DG	13.5	60	14.5	13.5			

Note: the last letter «G» of the part number indicates the grey colour of the bend relief. For ordering a bend relief with another colour, see table on page 176 and replace the letter «G» by the letter of the required colour.
See also detailed information for each series: B series on page 62: K series on page 65; S series on page 120; E series on page 123.

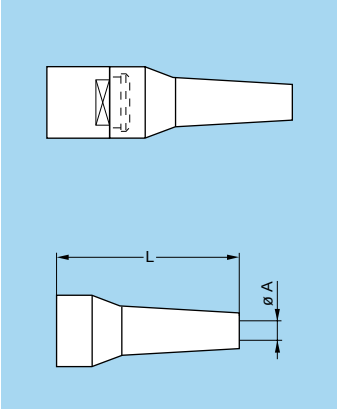

GMA Bend relief (Silicone)

A bend relief has been designed for connectors used in applications at high temperature or requiring vapour sterilization.
These bend reliefs are different from previous ones as for their material, a silicone elastomer which is noted for its retention of flexibility over a wide temperature range. They are available in nine colours.
Use the part numbers shown below to order this accessory separately.

Main characteristics

- Material: Silicone elastomer VMQ
- Temperature range in dry atmosphere: -60°C +200°C
- Temperature range in water steam: +140°C
- Inflammability: not flammable (no UL classification)

Part number	Dimensions (mm)				Series	Part number of nut for fitting the bend relief	Note
	Bend relief		Cable ø				
	A	L	max.	min.			
GMA.0B.025.RG	2.5	27	2.9	2.5	0B	FFM.0B.130.LC FFM.2B.132.LC [1]	[1] For use only with connectors from series 2B equipped with cable fixing type M and where a bend relief from series 0B is used.
GMA.0B.030.RG	3.0	27	3.4	3.0			
GMA.0B.035.RG	3.5	27	3.9	3.5	0S	FFM.0S.130.LC	
GMA.0B.040.RG	4.0	27	4.4	4.0	0E-0K	FFM.0E.130.LC	
GMA.0B.045.RG	4.5	27	5.2	4.5			
GMA.1B.025.RG	2.5	34	2.9	2.5	1B-1D	FFM.1B.130.LC FFM.3B.131.LC [1]	[1] For use only with connectors from series 3B equipped with cable fixing type M and where a bend relief from series 1B is used.
GMA.1B.030.RG	3.0	34	3.4	3.0			
GMA.1B.035.RG	3.5	34	3.9	3.5			
GMA.1B.040.RG	4.0	34	4.4	4.0	1S	FFM.1S.130.LC	
GMA.1B.045.RG	4.5	34	5.0	4.5			
GMA.1B.051.RG	5.1	34	5.6	5.1	1E	FFM.1E.130.LC	
GMA.1B.057.RG	5.7	34	6.2	5.7			
GMA.1B.063.RG	6.3	34	7.0	6.3			
GMA.2B.040.RG	4.0	41	4.4	4.0	2B	FFM.2B.130.LC FFM.4B.132.LC [1]	[1] For use only with connectors from series 4B equipped with cable fixing type M and where a bend relief from series 2B is used.
GMA.2B.045.RG	4.5	41	5.0	4.5			
GMA.2B.051.RG	5.1	41	5.6	5.1	2S	FFM.2S.130.LC	
GMA.2B.057.RG	5.7	41	6.2	5.7			
GMA.2B.063.RG	6.3	41	7.0	6.3	2E-2K	FFM.2E.130.LC	
GMA.2B.071.RG	7.1	41	7.9	7.1	2C-2G	FFM.2C.130.LC	
GMA.2B.080.RG	8.0	41	9.0	8.0			

Note: the last letter «G» of the part number indicates the grey colour of the bend relief. For ordering a bend relief with another colour, see table on page 176 and replace the letter «G» by the letter of the required colour.
See also detailed information for each series: B series on page 62: K series on page 65; S series on page 120; E series on page 123.

Note: the selection of pigments, which should remain stable at high temperature, is limited by the new regulations. For this reason, some colours will be a shade different from those used for Desmopan bend reliefs. The selected solutions represent the best possible compromise.

Ref.	Colour
A	blue
B	white
G	grey
J	yellow
M	brown

Ref.	Colour
N	black
R	red
S	orange
V	green

GM● Overall bend relief for plugs and sockets

Overall bend reliefs, type GMF for plugs and GMP for sockets offer optimum protection against mechanical damage and give a protection index of IP65 according to IEC 60529 (mated position). These bend reliefs slide easily over the connector shell and are positioned by slightly pressing the bend relief backnut.
The special design of the bend relief for plug provides for easy use of the push-pull self-latching system.

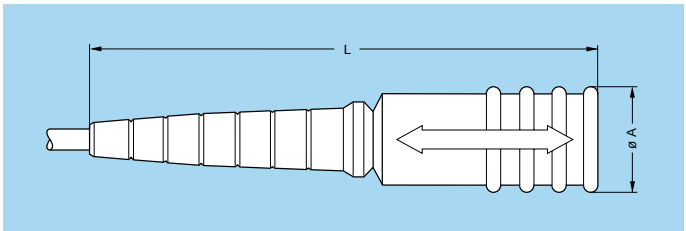

GMF Bend relief for plug

Reference		Dimensions (mm)			
		Bend relief		Cable ø	
Model	Series	A	L	max.	min.
GMF	0S-0B	14.7	60.5	3.5	1.0
GMF	1S-1B	16.0	72.0	6.2	2.5
GMF	2S-2B	22.0	95.0	8.2	5.0

- Material: Elastomere
- Operating temperature: -30°C to +120°C

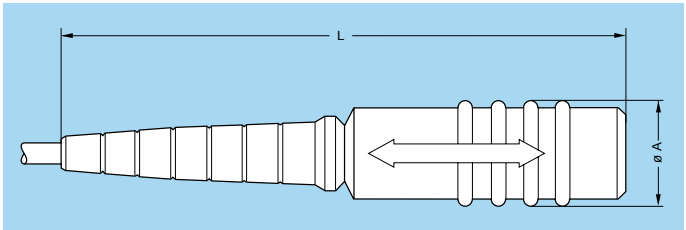

GMP Bend relief for free socket

Reference		Dimensions (mm)			
		Bend relief		Cable ø	
Model	Series	A	L	max.	min.
GMP	0S-0B	14.7	69.5	3.5	1.0
GMP	1S-1B	16.0	79.0	6.2	2.5
GMP	2S-2B	22.0	102.5	8.2	5.0

- Material: Elastomere
- Operating temperature: -30°C to +120°C

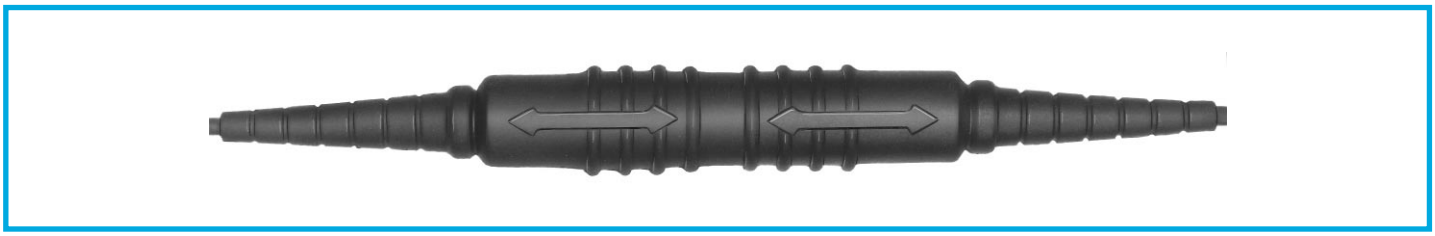

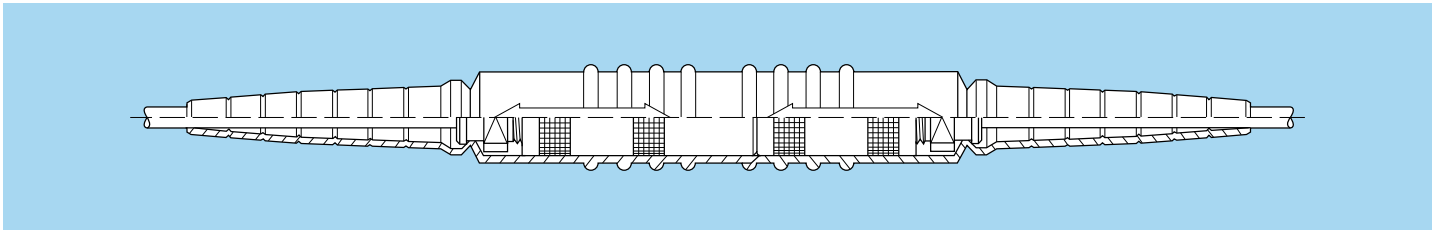

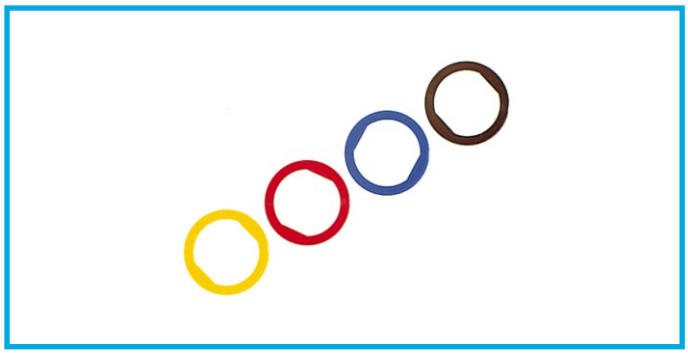

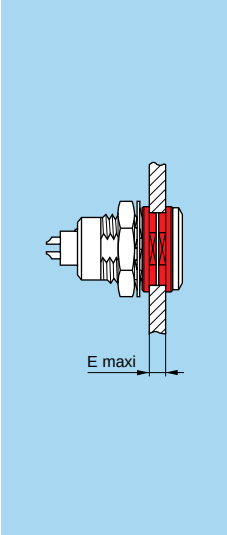

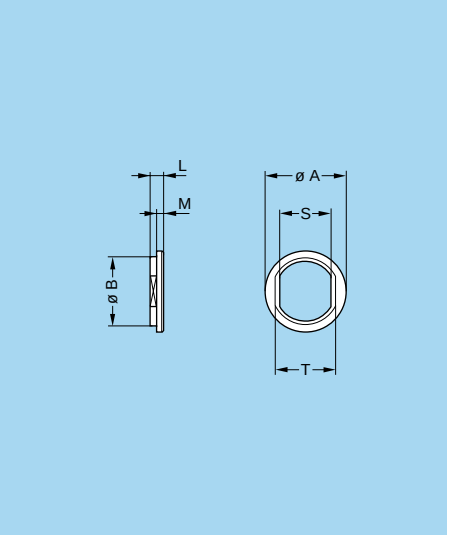

- Material: Polyamide
- Maximum operating temperature: 90° C

GRA Insulating washers

Sockets or plugs mounted on panels can be fitted with insulating washers. The nine colours available combined with those for the bend reliefs makes colour coding possible.

Part number	Series	Dimensions (mm)						
		A	B	E	L	M	S	T
GRA.00.269.GG	00	10	8.8	4.5	1.8	1.0	6.4	8.0
GRA.0S.269.GG	0S-0B	12	10.8	6.0	1.8	1.0	8.3	9.9
GRA.1S.269.GG	1S-1B	16	13.8	6.5	1.8	1.0	10.6	12.2
GRA.2S.269.GG	2S-2B	21	17.8	7.3	2.2	1.2	13.6	16.2
GRA.3S.269.GG	3S-3B	25	21.8	10.3	2.2	1.2	16.6	20.2
GRA.4S.269.GG	4S-4B	32	28.8	10.5	2.5	1.5	23.7	27.2

Note: insulating washers for series 5B are available on request.

Caution: these insulating washers can be used with fixed and free sockets with across flat dimension S1 equivalent to the S dimension of the washer.

Ref.	Colour	Ref.	Colour
A	blue	N	black
B	white	R	red
G	grey	S	orange
J	yellow	V	green
M	brown		

Note: the last letter «G» of the part number indicates the colour grey for the insulating washer. To obtain an insulating washer of another colour, refer to the table above and change the letter «G» of the part number to the corresponding letter of the colour required.
For the panel cut-out, please consult chapter «Panel cut-out» on page 190.

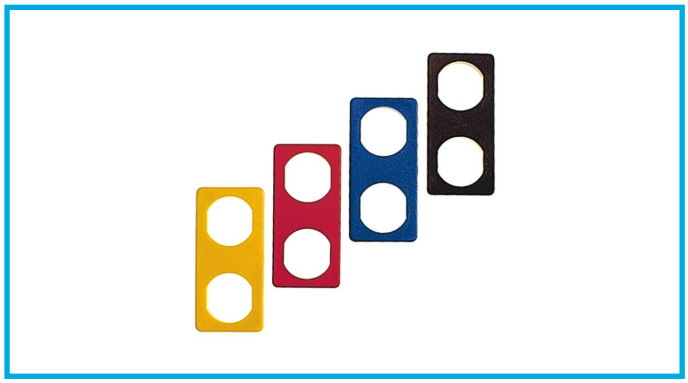

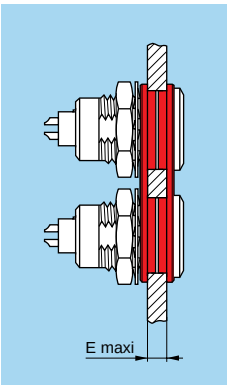

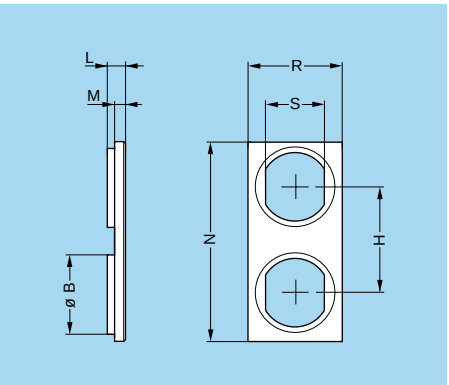

- Material: Polyamide
- Maximum operating temperature: 90° C

GRC Double panel washers

Double panel washers have been designed to make the drilling of panel holes easier for mounting fixed and free sockets. The combination of the nine different colours of the double panel washers and of the bend reliefs makes colour coding possible.

Part number	Series	Dimensions (mm)							
		B	E	H	L	M	N	R	S
GRC.0S.260.HG	0S-0B	10.9	5	14	2.5	1.5	26.5	12.5	8.3
GRC.1B.260.HG	1S-1B	13.9	5	20	3.3	1.8	34.5	14.5	10.6

Caution: these double panel washers can be used with fixed or free sockets with across flat dimension S1 equivalent to the S dimension of the washer.

Ref.	Colour	Ref.	Colour
A	blue	N	black
B	white	R	red
G	grey	S	orange
J	yellow	V	green
M	brown		

Note: the last letter «G» of the washer's part number indicates the colour grey. For other colours, refer to the above table and replace letter «G» by the one corresponding to the colour required.
For the panel cut-out, please consult chapter «Panel cut-out» on page 190.

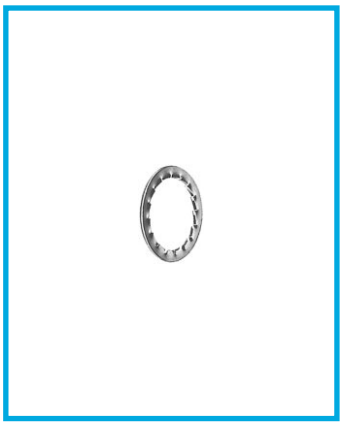

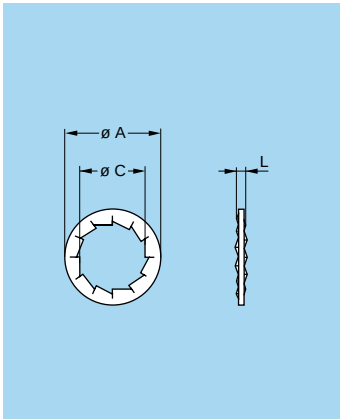

GBA Locking washers

Part number	Series	Dimensions (mm)		
		A	C	L
GBA.00.250.FN	00	9.5	7.1	1.0
GBA.0S.250.FN	0S-0B	12.5	9.1	1.0
GBA.1S.250.FN	1S-1B 1D	16.0	12.1	1.0
GBA.1E.250.FN	1E-1K	21.8	16.1	1.2
GBA.2S.250.FN	2S-2B 2C-2G	19.5	15.1	1.2
GBA.3S.250.FN	3S-3B	25.0	18.1	1.4
GBA.4S.250.FN	4S-4B	32.0	25.1	1.4

- Material: Nickel-plated bronze (3 µm)

Note: to order this accessory separately, use the above part numbers.

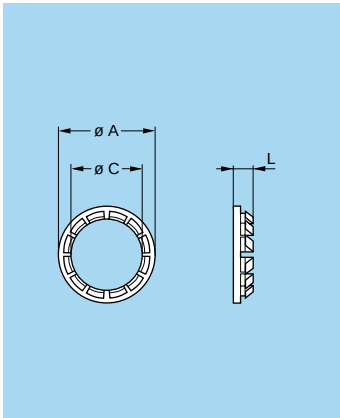

GBB Tapered washers

Part number	Series	Dimensions (mm)		
		A	C	L
GBB.00.250.LN	00	9	7.1	2.0
GBB.0S.250.LN	0S-0B	11	9.1	2.5
GBB.1S.250.LN	1S-1B	15	12.1	3.5
GBB.2S.250.LN	2S-2B 2C-2G	18	15.1	4.0
GBB.3S.250.LN	3S-3B	22	18.1	4.5
GBB.4S.250.LN	4S-4B	28	25.2	5.0
GBB.5S.250.LN	5S-5B	40	35.2	7.5

- Material: Nickel-plated brass (3 µm)

Note: sockets of series 5B and 5S are always supplied with a tapered washer. To order this accessory separately, use the above part numbers.

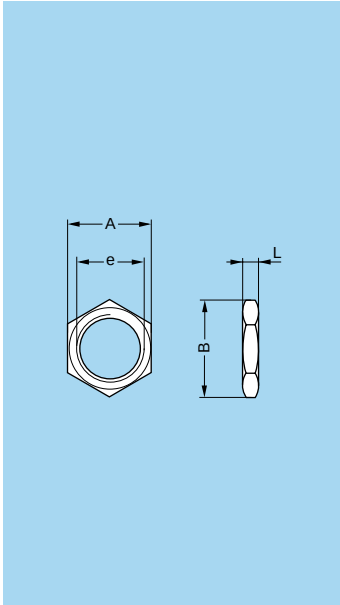

GEA Hexagonal nuts

Part number	Series	Dimensions (mm)			
		A	B	e	L
GEA.00.240.LN	00	9	10.3	M7 x 0.50	2.0
GEA.0S.240.LN	0S-0B	11	12.5	M 9 x 0.60	2.0
GEA.0S.241.LN	0S-0B	12	13.8	M10 x 0.75	2.5
GEA.0E.240.LN	0E-0K 1S-1B	17	19.5	M14 x 1.00	2.5
GEA.1S.240.LN	1S-1B 1D	14	16.0	M12 x 1.00	2.5
GEA.1E.240.LN	1E-1K 2S-2B	19	21.8	M16 x 1.00	3.0
GEA.2S.240.LN	2S-2B	17	19.5	M15 x 1.00	2.7
GEA.2E.240.LN	2E-2K	24	27.5	M20 x 1.00	4.0
GEA.3S.240.LN	3S-3B	22	25.2	M18 x 1.00	3.0
GEA.3E.240.LN	3E-3K	30	34.4	M24 x 1.00	5.0
GEA.4S.240.LN	4S-4B	30	32.0	M25 x 1.00	5.0
GEA.4E.240.LN	4E-4K	36	40.5	M30 x 1.00	7.0

- Material:
  – Nickel-plated brass (3 µm)
  – Natural anodized aluminium alloy
  – Stainless steel

Note: to order this part separately, use the above part numbers. The last letters «LN» of the part number refer to the nut material and treatment. If a nut in aluminium alloy or stainless steel is desired, replace the last letters of the part number by «PT» or «AZ» respectively.

Model 1

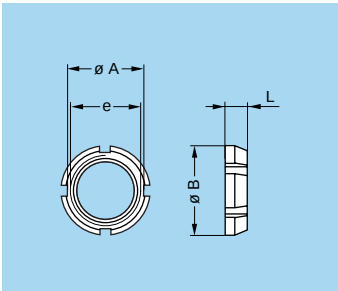

Model 2

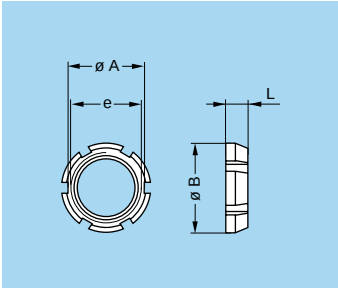

GEG Notched nut

Part number	Model	Dimensions (mm)			
		A	B	e	L
GEG.00 240.LC	1	8.7	10	M7 x 0.5	2.5
GEG.0S.240.LC	1	10.5	12	M9 x 0.6	2.5
GEG.0E.240.LC	1	15.8	18	M14 x 1.0	3.5
GEG.1S.240.LC	1	14.0	16	M12 x 1.0	3.5
GEG.1E.240.LC	2	17.5	20	M16 x 1.0	3.5
GEG.1S.242.LC	1	12.1	14	M11 x 0.5	3.5
GEG.2S.240.LC	2	17.5	20	M15 x 1.0	3.5
GEG.2S.241.LC	2	20.5	24	M19 x 1.0	3.5
GEG.2E.240.LC	2	22.5	25	M20 x 1.0	3.5

- Material: Chrome-plated brass (Ni 3 µm + Cr 0.3 µm)

Note: 00, 0B, 0S, 1B, 1S, 2B and 2S series fixed and free sockets for back panel mounting are always delivered with this notched nut.
To order this accessory separately, use the above part numbers.

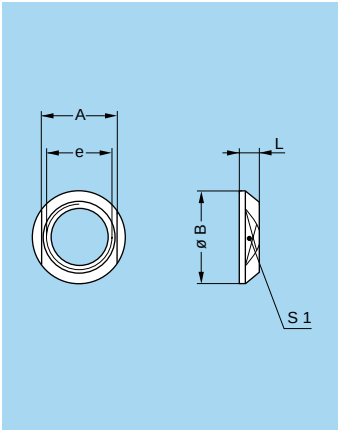

- Material: Chrome-plated brass (Ni 3 µm + Cr 0.3 µm)

Note: 3B, 3K, 3S, 3E, 4B, 4K, 4S, 4E, 5B, 5K, 5S, 5E, 6S and 6E series fixed and free sockets for back panel mounting are always delivered with a conical nut. To order this accessory separately, use the part numbers in the adjacent table.

GEC Conical nuts

Part number	Dimensions (mm)				
	A	B	e	L	S1
GEC.00 240.LC	8	10.0	M7 x 0.5	2.5	8
GEC.0S.240.LC	10	12.0	M9 x 0.6	2.5	10
GEC.0E.240.LC	16	18.0	M14 x 1.0	3.0	16
GEC.1S.240.LC	13	16.0	M12 x 1.0	3.2	13
GEC.1S.241.LC	17	20.0	M16 x 1.0	4.0	17
GEC.1S.242.LC	12	14.0	M11 x 0.5	3.2	12
GEC.2S.240.LC	17	20.0	M15 x 1.0	3.8	17
GEC.2S.241.LC	20	24.0	M19 x 1.0	5.8	20
GEC.2E.240.LC	22	25.0	M20 x 1.0	5.0	20
GEC.3S.240.LC	20	24.0	M18 x 1.0	4.5	20
GEC.3E.240.LC	27	30.0	M24 x 1.0	4.5	24
GEC.4S.240.LC	27	30.0	M25 x 1.0	4.5	27
GEC.4K.241.LC	32	35.5	M30 x 1.0	5.0	36
GEC.5S.240.LC	37	41.0	M35 x 1.0	5.0	37

Model 1

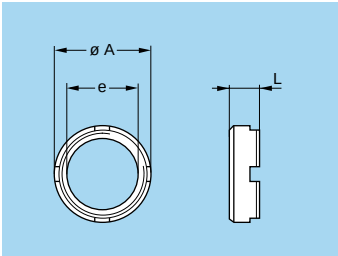

Model 2

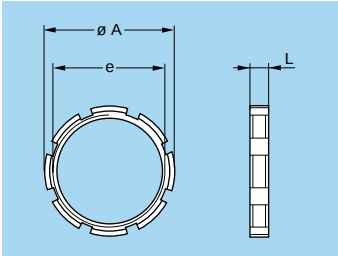

- Material: Nickel-plated brass (3 µm)

Note: 5B, 5K, 5S, 5E, 6S and 6E series sockets and plugs are always supplied with model 2 round nuts. To order this accessory separately, use the part numbers in the adjacent table.

GEB Round nuts

Part number	Model	Dimensions (mm)		
		A	e	L
GEB.00.240.LN	1	9.0	M7 x 0.50	4.0
GEB.0S.240.LN	1	11.0	M9 x 0.60	4.0
GEB.0E.240.LN	1	18.0	M14 x 1.00	5.0
GEB.1S.240.LN	1	14.0	M12 x 1.00	5.0
GEB.1E.240.LN	1	20.0	M16 x 1.00	5.0
GEB.2S.240.LN	1	18.0	M15 x 1.00	5.5
GEB.2B.240.LN	2	17.5	M15 x 0.75	2.5
GEB.3S.240.LN	1	22.0	M18 x 1.00	5.5
GEB.4S.240.LN	1	28.0	M25 x 1.00	6.0
GEB.5S.240.LN	2	40.0	M35 x 1.00	8.0
GEB.5E.240.LN	2	54.0	M45 x 1.50	8.0
GEB.6S.241.LN	2	54.0	M48 x 1.50	8.0
GEB.6E.240.LN	2	65.0	M55 x 2.00	9.0

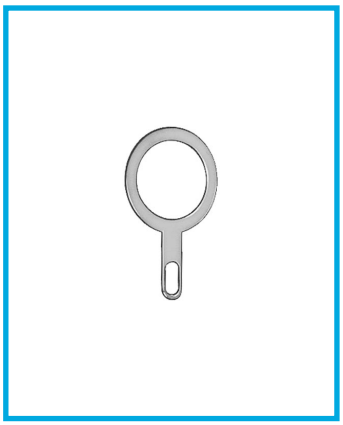

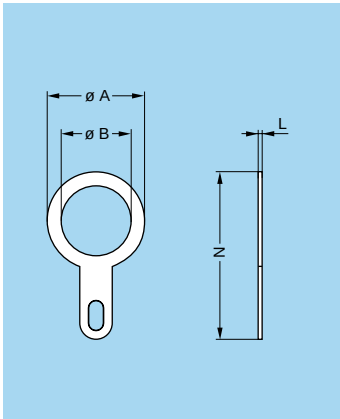

- Material: CuSnZn plated brass (2 µm)

GCA Earthing washer

Part number	Series	Dimensions (mm)			
		A	B	L	N
GCA.00.255.LT	00	9.5	7.1	0.4	18.2
GCA.0S.255.LT	0S-0B	13.0	9.1	0.4	22.0
GCA.0E.255.LT	0E-0K	17	14.1	0.5	27.5
GCA.1S.255.LT	1S-1B	17	12.2	0.5	27.5
GCA.1E.255.LT	1E-1K	20	16.2	0.5	32.0
GCA.2S.255.LT	2S-2B	20	15.2	0.5	32.0
GCA.2E.255.LT	2E-2K	25	20.2	0.5	39.0
GCA.3S.255.LT	3S-3B	25	18.2	0.5	39.0
GCA.4S.255.LT	4S-4B	35	25.6	0.6	50.0
GCA.4E.255.LT	4E-4K	35	30.6	0.6	50.0
GCA.5S.255.LT	5S-5B	42	35.1	0.7	57.5

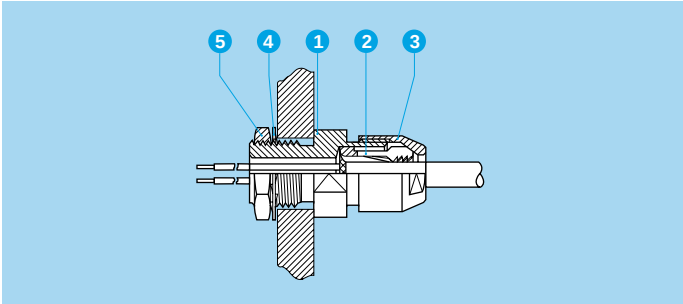

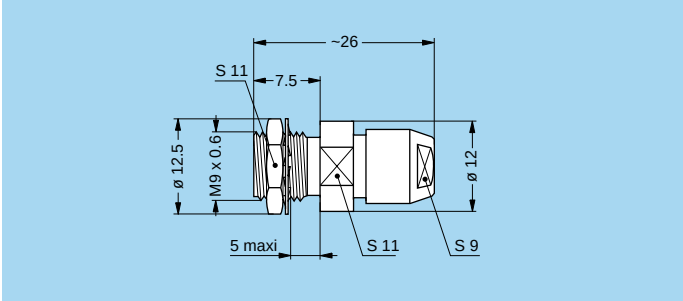

GSC Lead-through with cable collet

Part number	Cable ø (mm)	
	max.	min.
GSC.1S.290.ND42	4.0	3.1
GSC.1S.290.ND52	5.0	4.1
GSC.1S.290.ND62	6.0	5.1
GSC.1S.290.ND72	7.0	6.1
GSC.1S.290.ND76	7.5	7.1

Note:
the cable collet system stands for both screened and unscreened cables. It can be delivered with a nut for fitting a bend relief it you add a «Z» at the end of the part number.

Tooling

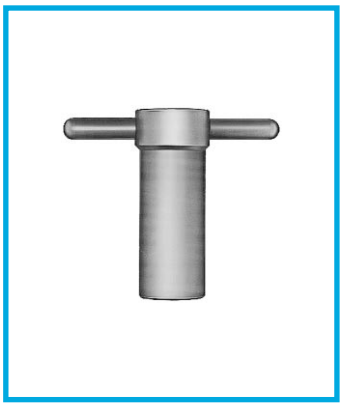

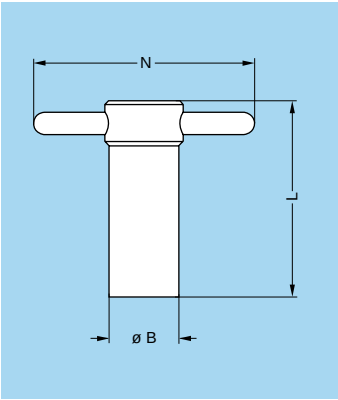

DCG Spanners for hexagonal nuts

Part number	Dimensions (mm)			Part number of the nut
	B	L	N	
DCG.91.149.0TN	14	40	50	GEA.00.240.LN
DCG.91.161.1TN	16	45	52	GEA.0S.240.LN
DCG.91.201.4TN	20	52	65	GEA.1S.240.LN
DCG.91.231.7TN	23	62	68	GEA.2S.240.LN
DCG.91.282.2TN	28	76	73	GEA.3S.240.LN

- Material: blackened steel

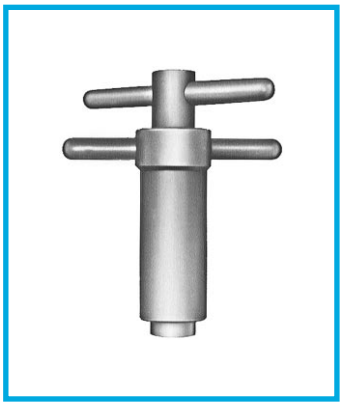

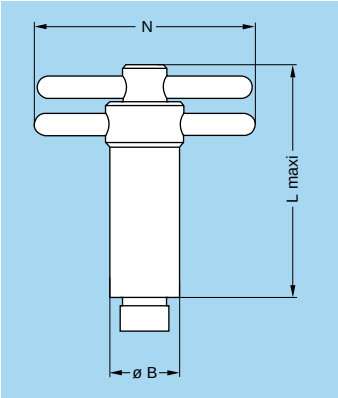

DCA Spanners for hexagonal nuts with locator for flats on socket thread

Part number	Dimensions (mm)			Part number of the nut
	B	L	N	
DCA.91.149.0TN	14	65	50	GEA.00.240.LN
DCA.91.161.1TN	16	73	52	GEA.0S.240.LN
DCA.91.201.4TN	20	85	65	GEA.1S.240.LN
DCA.91.231.7TN	23	100	68	GEA.2S.240.LN
DCA.91.282.2TN	28	120	73	GEA.3S.240.LN

- Material: blackened steel

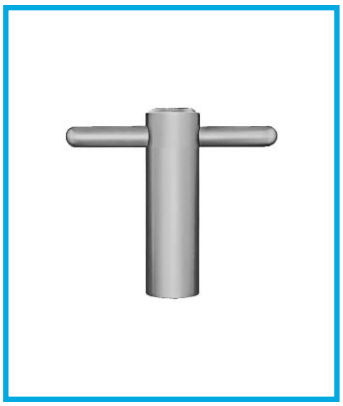

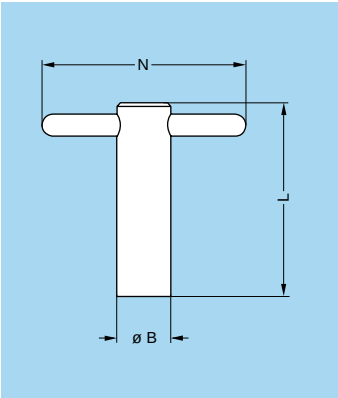

DCB Spanners for round nuts

Part number	Dimensions (mm)			Part number of the nut
	B	L	N	
DCB.91.119.0TN	11	40	50	GEB.00.240.LN
DCB.91.131.1TN	13	45	50	GEB.0S.240.LN
DCB.91.161.4TN	16	52	65	GEB.1S.240.LN
DCB.91.201.8TN	20	62	65	GEB.2S.240.LN
DCB.91.242.2TN	24	76	70	GEB.3S.240.LN

- Material: blackened steel

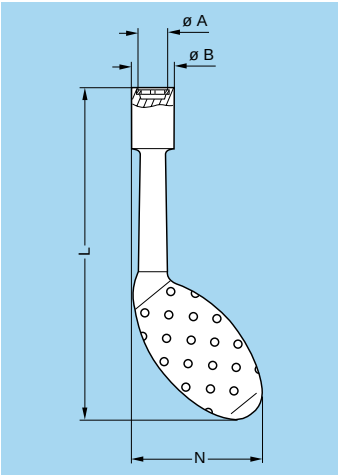

DCH Spanners for conical nut

Part number	Dimensions (mm)				Part number of the nut
	A	B	L	N	
DCH.91.101.PN	10.1	12.8	124	48.3	GEC.00.240.LC
DCH.91.121.PN	12.1	14.8	124	49.3	GEC.0S.240.LC
DCH.91.161.PN	16.1	21.0	124	51.9	GEC.1S.240.LC
DCH.91.201.PN	20.1	22.8	129	53.5	GEC.2S.240.LC

- Material: Dark grey polyurethane

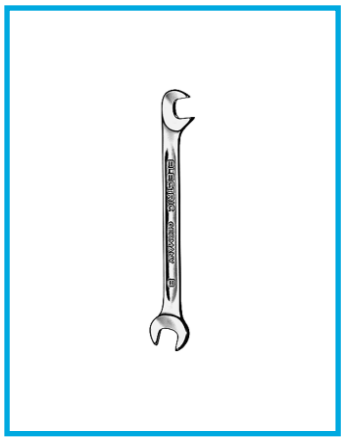

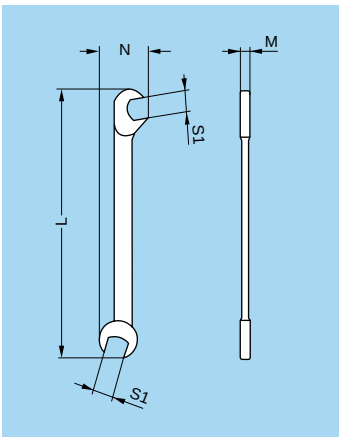

DCP Flat spanners for collet nut

Part number	Dimensions (mm)			
	L	M	N	S1
DCP.99.045.TC	70	2	10.5	4.5
DCP.99.050.TC	78	2	12.6	5.0
DCP.99.055.TC	78	2	12.6	5.5
DCP.99.060.TC	78	2	12.6	6.0

- Material: chrome-plated steel

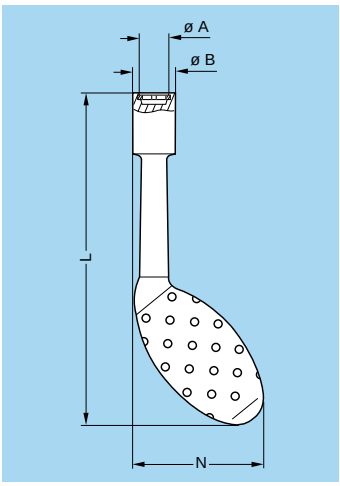

DCH Spanners for notched nuts

Part number	Dimensions (mm)				Part number of the nut
	A	B	L	N	
DCH.91.101.PA	10.1	12.8	124	48.3	GEG.00.240.LC
DCH.91.121.PA	12.1	14.8	124	49.3	GEG.0S.240.LC
DCH.91.181.PA	18.1	22.8	129	53.1	GEG.0E.240.LC
DCH.91.161.PA	16.1	21.0	124	51.2	GEG.1S.240.LC
DCH.91.201.PA	20.1	22.8	129	53.5	GEG.1E.240.LC
DCH.91.141.PA	14.1	18.6	124	51.2	GEG.1S.242.LC
DCH.91.201.PA	20.1	22.8	129	53.5	GEG.2S.240.LC
DCH.91.241.PA	24.1	30.8	134	52.6	GEG.2S.241.LC
DCH.91.251.PA	25.1	32.8	134	55.5	GEG.2E.240.LC

- Material: Blue polyurethane

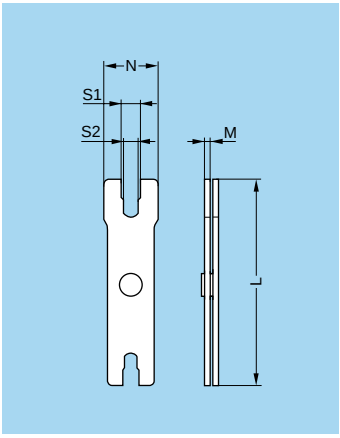

DCP Set of flat spanners for collet nuts

Part number	Series	Dimensions (mm)				
		L	M	N	S1	S2
DCP.91.001.TN	0B	95	2.5	21	8.1	7.1
	1B	95	2.5	25	10.1	9.1
DCP.91.023.TN	2B-2K	115	3.0	30	13.1	12.1
	3B-3K	115	3.0	35	15.1	14.1
DCP.91.045.TN	4B	130	3.5	40	21.2	20.2
	5B	130	3.5	45	31.2	30.2

- Material: blackened steel

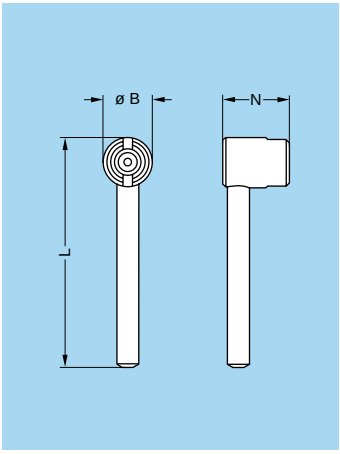

DCL Spanners for assembling plugs with 2 latches

Part number	Series	Dimensions (mm)		
		B	L	N
DCL.91.105.0TK	00	10	45	13.5
DCL.91.127.0TK	0S	12	47	17.0
DCL.91.149.0TK	1S	14	52	19.0

- Material: blackened steel

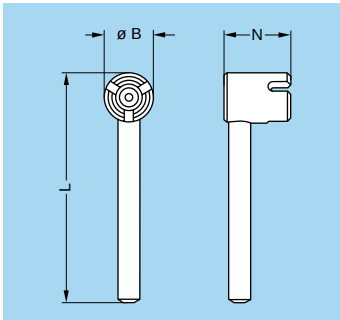

DCN Spanners for assembling plugs with 3 latches

Part number	Series	Dimensions (mm)		
		B	L	N
DCN.91.905.0TK	00	9	45	12
DCN.91.125.0TK	0S	12	47	17
DCN.91.149.0TK	1S	14	52	19
DCN.91.171.2TK	2S-2C	17	63	20
DCN.91.201.5TK	3S	20	73	22

- Material: blackened steel

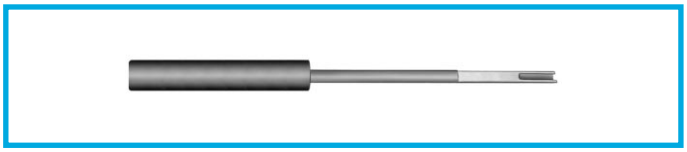

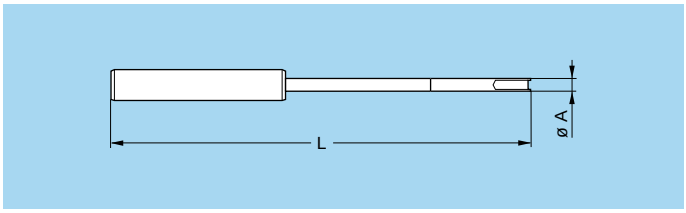

DCL Assembly tool for FVB.00.303.NLA plugs

Part number	Series	Dim. (mm)	
		A	L
DCL.91.516.5TK	00	5	165

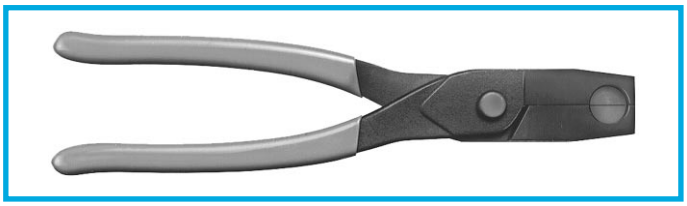

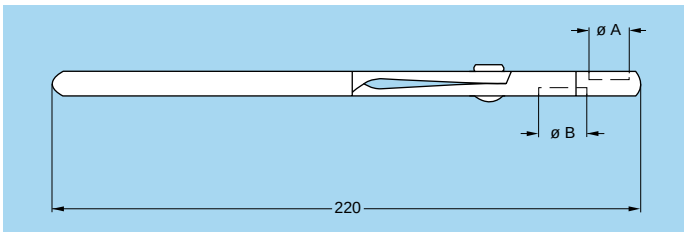

DPF Pliers for assembling plugs (series K and E)

Part number	Series	Dimensions (mm)	
		A	B
DPF.91.001.TA	0E-0K	10	–
	1E-1K	–	12
DPF.91.023.TA	2E-2K	15	–
	3E-3K	–	18

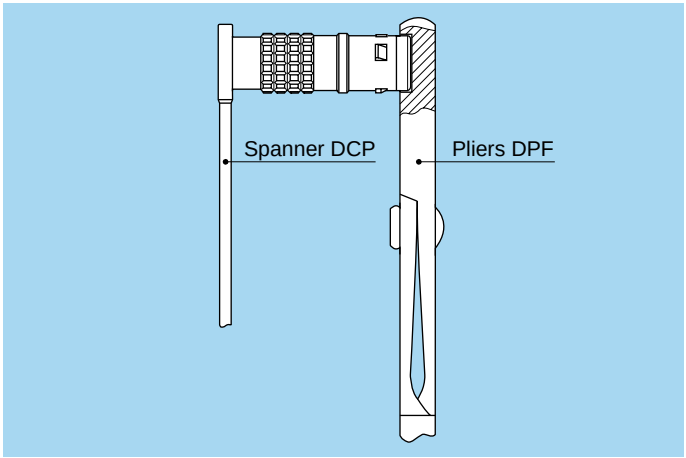

Example for use

The plug end must be held in the pliers whilst the nut is tightened with the flat spanner.

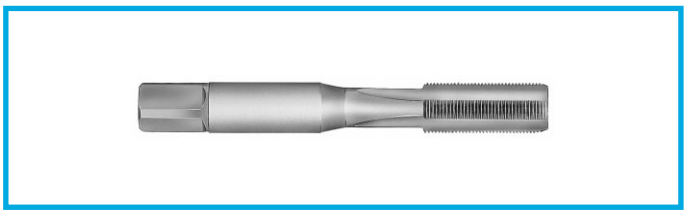

DTA Taps

Part number	Series	Thread
DTA.99.700.5Z	00	M7 x 0.5
DTA.99.900.6Z	0S-0B	M9 x 0.6

Crimping tools for electrical contacts

Fig. 1

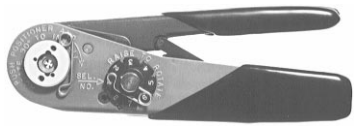

Fig. 2

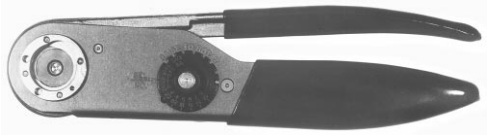

Manual crimping tools

Supplier	Part number		
	contact ø 0.5-0.7 0.9-1.3 (Fig. 1)	contact ø 1.6-2.0 (Fig. 2)	contact ø 3.0-4.0 (Fig. 2)
LEMO	DPC.91.701.V[1)]	DPC.91.101.A[2)]	DPC.91.102.V
DANIELS	MH860[1)]	AF8[2)]	M300BT
ASTRO	616336[1)]	615708[2)]	–

[1)] According to specification MIL-C-22520/7-01.
[2)] According to specification MIL-C-22520/1-01.

Pneumatic crimping tools

Supplier	Part number
LEMO	DPC.91.701.C
BALMAR	85230
BUCHANAN	621101

According to specification MIL-C-22520/7-01.
For LEMO contacts ø 0.5-0.7-0.9-1.3 mm

male

female

These positioners are suitable for use with both manual and pneumatic crimping tools according to the MIL-C-22520/7-01 standard.

Fig. 1

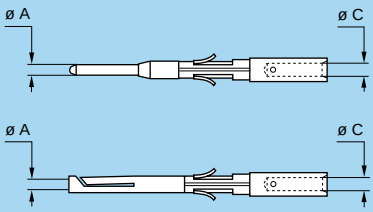

Fig. 2

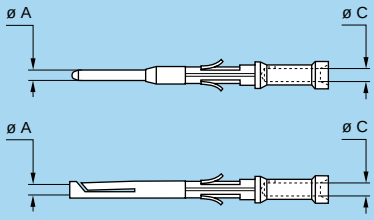

Note: a wide variation of strand number and diameter combinations are quoted as being AWG, some of which do not have a large enough cross section to guarantee a crimp as per either MIL-C-22520/1-01 or /7-01. Our technical department is at your disposal to study and propose a solution to all your applications.

Note: see table on page 60 for connector selection and the table on page 170 for contact selection.

DCE Positioners for crimp contacts ø 0.5-0.7-0.9 and 1.3 mm

	Connector + Contact					Positioners part number	
	Type	ø A	ø C	Fig.	Conductor AWG	For male contact	For female contact
00	302 303 304	0.5	0.45	1	28-30-32	DCE.91.050.0VC	DCE.91.050.0VM
0B 0K 0S	302[1)] 303	0.9	1.10	1	20-22-24	DCE.91.090.BVC	DCE.91.090.BVM
		0.9	0.80	2	22-24-26		
		0.9	0.45	2	28-30-32	DCE.91.090.AVC	DCE.91.090.AVM
	304/305	0.7	0.80	1	22-24-26	DCE.91.070.BVC	DCE.91.070.BVM
		0.7	0.45	2	28-30-32		
	306/307 309	0.5	0.45	1	28-30-32	DCE.91.050.BVC	DCE.91.050.BVM
1B 1K 1S	302[1)] 303	1.3	1.40	1	18-20	DCE.91.131.BVC	DCE.91.131.BVM
		1.3	1.10	2	20-22-24		
	304[1)] 305	0.9	1.10	1	20-22-24	DCE.91.091.BVC	DCE.91.091.BVM
		0.9	0.80	2	22-24-26		
	306/307 308	0.7	0.80	1	22-24-26	DCE.91.071.BVC	DCE.91.071.BVM
		0.7	0.45	2	28-30-32		
	310/314 316	0.5	0.45	1	28-30-32	DCE.91.051.BVC	DCE.91.051.BVM
2B 2K 2S	304/305 306[1)] 307	1.3	1.40	1	18-20	DCE.91.132.BVC	DCE.91.132.BVM
		1.3	1.10	2	20-22-24		
		1.3	0.80	2	22-24-26	DCE.91.132.CVC	DCE.91.132.CVM
	308/310	0.9	1.10	1	20-22-24	DCE.91.092.BVC	DCE.91.092.BVM
		0.9	0.80	2	22-24-26		
		0.9	0.45	2	28-30-32	DCE.91.092.AVC	DCE.91.092.AVM
	312/314 316/318 319	0.7	0.80	1	22-24-26	DCE.91.072.BVC	DCE.91.072.BVM
		0.7	0.45	2	28-30-32		
	326/332	0.5	0.45	1	28-30-32	DCE.91.052.BVC	DCE.91.052.BVM

Note: [1)] only these types are available in S series.

male

female

These positioners are suitable for use with both manual and pneumatic crimping tools according to the MIL-C-22520/7-01 standard.

DCE Positioners for crimp contacts 0.5-0.7-0.9 and 1.3 mm diameter

	Connector + Contact					Positioners part number	
	Type	ø A	ø C	Fig.	Conductor AWG	For male contact	For female contact
3B 3K	308/309 310	1.3	1.40	1	18-20	DCE.91.133.BVC	DCE.91.133.BVM
		1.3	1.10	2	20-22-24		
	312/314 316/318	0.9	1.10	1	20-22-24	DCE.91.093.BVC	DCE.91.093.BVM
		0.9	0.80	2	22-24-26		
	320/322 324/326 328/330	0.7	0.80	1	22-24-26	DCE.91.073.BVC	DCE.91.073.BVM
		0.7	0.45	2	28-30-32		
4B 4K	312	1.3	1.40	1	18-20	DCE.91.134.BVC	DCE.91.134.BVM
		1.3	1.10	2	20-22-24		
	316/320 324/330	0.9	1.10	1	20-22-24	DCE.91.094.BVC	DCE.91.094.BVM
		0.9	0.80	2	22-24-26		
	340	0.7	0.80	1	22-24-26	DCE.91.074.BVC	DCE.91.074.BVM
		0.7	0.45	2	28-30-32		
5B 5K	330/340 348	1.3	1.40	1	18-20	DCE.91.135.BVC	DCE.91.135.BVM
		1.3	1.10	2	20-22-24		
	350/354 364	0.9	1.10	1	20-22-24	DCE.91.095.BVC	DCE.91.095.BVM
		0.9	0.80	2	22-24-26		

Note: these turrets can be used with manual crimping tool according to MIL-C-22520/1-01 standard.

DCE Turret for crimp contacts 1.6-2.0-3.0 and 4.0 mm diameter

	Connector + Contact					Positioners
	Type	ø A	ø C	Fig.	Conductor AWG	Part number
2B 2K	302	2.0	2.4	1	12-14-16	DCE.91.202.BVCM
		2.0	1.9	2	14-16-18	
	303	1.6	1.9	1	14-16-18	DCE.91.162.BVCM
		1.6	1.4	2	18-20	
3B 3K	302	3.0	2.9	1	10-12-14	DCE.91.303.BVCM
	303/304 309	2.0	2.4	1	12-14-16	DCE.91.203.BVCM
		2.0	1.9	2	14-16-18	
	305/306 307	1.6	1.9	1	14-16-18	DCE.91.163.BVCM
		1.6	1.4	2	18-20	
4B 4K	304	3.0	2.9	1	10-12-14	DCE.91.304.BVCM
	306/307	2.0	2.4	1	12-14-16	DCE.91.204.BVCM
		2.0	1.9	2	14-16-18	
	310	1.6	1.9	1	14-16-18	DCE.91.164.BVCM
		1.6	1.4	2	18-20	
5B 5K	304	4.0	4.0	1	8-10-12	DCE.91.405.BVCM
	310	3.0	2.9	1	10-12-14	DCE.91.305.BVCM
	314/316	2.0	2.4	1	12-14-16	DCE.91.205.BVCM
		2.0	1.9	2	14-16-18	
	320	1.6	1.9	1	14-16-18	DCE.91.165.BVCM
		1.6	1.4	2	18-20	

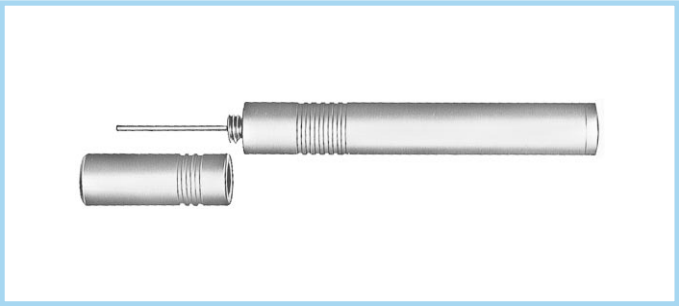

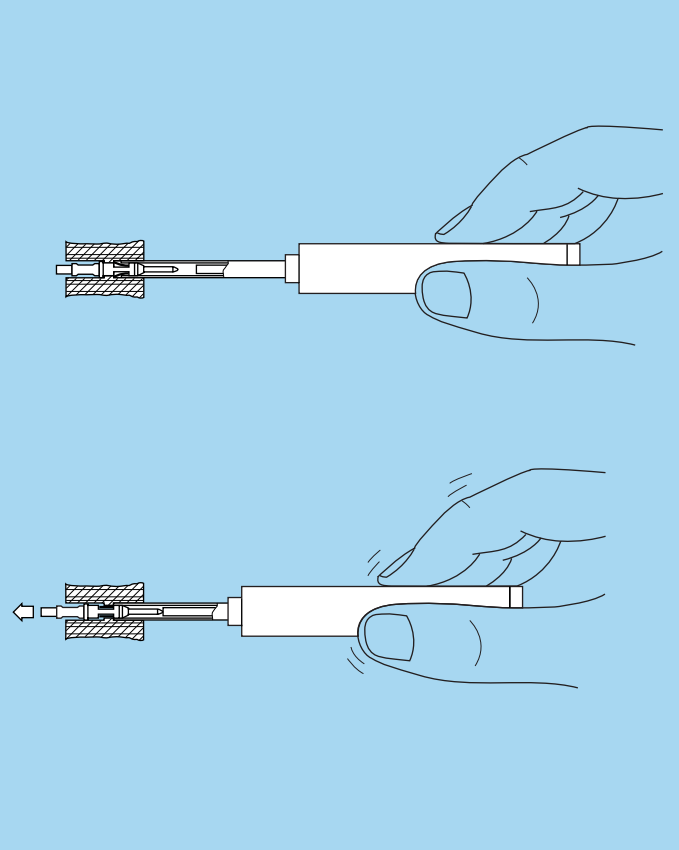

Note: this model is used for male and female contacts.

DCF Extraction tools for crimp contacts

	Connector		Extractors
	Type	Contact ø A	Part number
00	302/303/304	0.5	DCF.91.050.2LT
0B 0K	302/303	0.9	DCF.91.090.2LT
	304/305	0.7	DCF.91.070.2LT
	306/307/309	0.5	DCF.91.050.2LT
1B 1K	302/303	1.3	DCF.91.131.2LT
	304/305	0.9	DCF.91.090.2LT
	306/307/308	0.7	DCF.91.070.2LT
	310/314/316	0.5	DCF.91.050.2LT
2B 2K	302	2.0	DCF.91.202.2LT
	303	1.6	DCF.91.162.2LT
	304/305/306/307	1.3	DCF.91.131.2LT
	308/310	0.9	DCF.91.090.2LT
	312/314/316/318/319	0.7	DCF.91.070.2LT
	326/332	0.5	DCF.91.050.2LT
3B 3K	302	3.0	DCF.91.303.5LT
	303/304/309	2.0	DCF.91.203.5LT
	305/306/307	1.6	DCF.91.163.5LT
	308/309/310	1.3	DCF.91.133.5LT
	312/314/316/318	0.9	DCF.91.093.5LT
	320/322/324/326/330	0.7	DCF.91.073.5LT
4B 4K	304	3.0	DCF.91.303.5LT
	306/307	2.0	DCF.91.203.5LT
	310	1.6	DCF.91.163.5LT
	312	1.3	DCF.91.133.5LT
	316/320/324/330	0.9	DCF.91.093.5LT
	340	0.7	DCF.91.073.5LT
5B 5K	304	4.0	DCF.91.405.5LT
	310	3.0	DCF.91.303.5LT
	314/316	2.0	DCF.91.203.5LT
	320	1.6	DCF.91.163.5LT
	330/340/348	1.3	DCF.91.133.5LT
	350/354/364	0.9	DCF.91.093.5LT

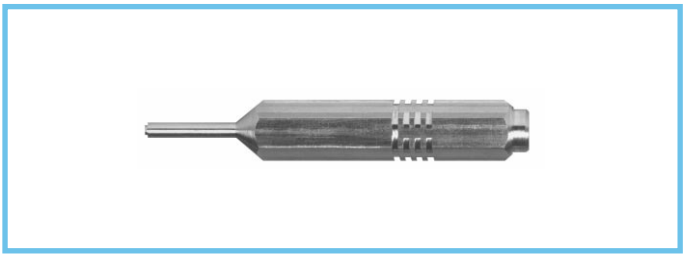

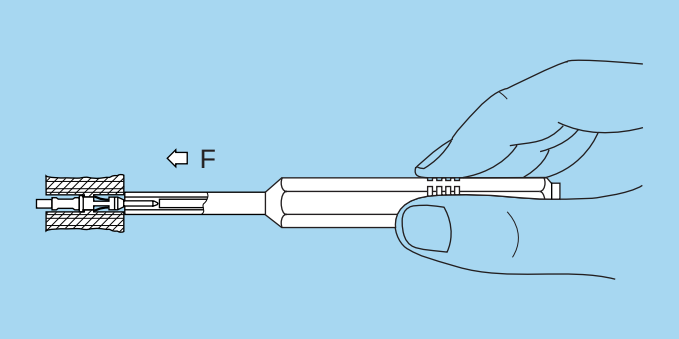

DCK Retention testing tools for crimp contacts 0.5-0.7-0.9 and 1.3 mm diameter

Contact ø A	Test force (N)	Testing tool part number	
		For male contact	For female contact
0.5	8	DCK.91.050.8LRC	DCK.91.050.8LRM
0.7	14	DCK.91.071.4LRC	DCK.91.071.4LRM
0.9	14	DCK.91.091.4LRC	DCK.91.091.4LRM
1.3	25	DCK.91.132.5LRC	DCK.91.132.5LRM

Panel Cut-outs

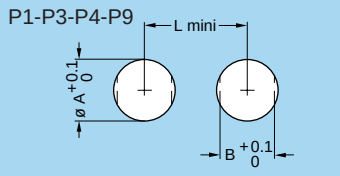

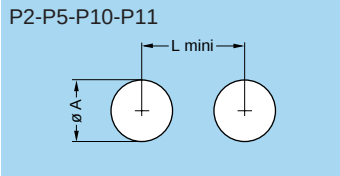

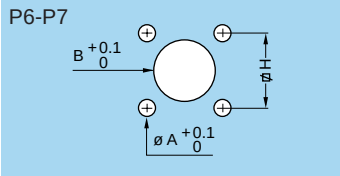

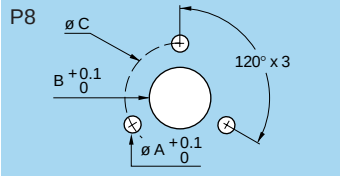

B series

Series	P1			P2		P3			P4			P5		P6			P8			P9			P10	
	ø A	B	L	ø A	L	ø A	B	L	ø A	B	L	ø A[2]	L	ø A	B	H	ø A	B	C	ø A	B	L	ø A	L
00	7.1	6.4	11.5	7.1	11.5	–	–	–	–	–	–	–	–	–	–	–	–	–	–	7.1	–	12	–	–
0B	9.1	8.3	13.5	9.1	13.5	14.1	12.6	20	10.1	9.1	15.0	8.30	10.5	–	–	–	–	–	–	9.1	8.3	15	–	–
1B	12.1	10.6	19.0	–	–	16.1	14.6	22	14.1	12.6	21.0	11.17	14.0	–	–	–	–	–	–	12.1	10.6	19	11.1	17
2B	15.1	13.6	21.5	–	–	19.2	17.1	28	16.1	15.1	23.0	13.95	18.0	–	–	–	–	–	–	15.1	13.6	23	–	–
3B	18.2	16.6	27.0	–	–	–	–	–	20.2	18.6	29.5	–	–	–	–	–	–	–	–	18.2	16.6	27	–	–
4B	25.2	23.6	34.0	–	–	–	–	–	25.2	23.6	36.1	–	–	–	–	–	–	–	–	25.2	23.6	36	–	–
5B	35.2[1]	33.6	44.0	–	–	–	–	–	35.2	33.6	47.1	–	–	3.3	35.2	34	2.8	35.2	47	35.2	33.6	47	–	–

Note:
[1] for using the tapered washer a round hole ø 36 mm apply. [2] tolerance: $^{+0.02}_{0}$

Cut-out types

Model	Type	Model	Type	Model	Type	Model	Type	Model	Type
EBG	P6	EKG	P1	FAG	P1	HMG	P9	XBG	P2
ECG	P1	EMG	P1	FBG	P8	HNG	P9	XPF	P2
EEG	P1	ENG	P1	FWG	P9	PEG	P1	XRB	P2
EGG	P1	ENY	P1	HCG	P3	PFG	P1	YHG	P9
EFG	P2	ESG	P1/P2	HEG	P9	PKG	P1		
EHG	P1	EXG	P2/P10	HGG	P9	R●●	P4		
EJG	P5	EYG	P1/P10	HHG	P9	S●●	P4/P9[3]		

Note: [3] in series 1B use P9.

Mounting nut torque

Series	Torque (Nm)	
	Metal shell	Plastic shell[4]
00	1.0	0.4
0B	2.5	0.4
1B	4.5	0.7
2B	6.0	0.8
3B	9.0	1.0
4B	12.0	5.0
5B	17.0	–

Note: [4] these values apply when metal shell are mounted with insulating washer.

S series

Series	P1			P2		P3			P4			P5		P6			P7			P10		P11	
	ø A	B	L	ø A	L	ø A	B	L	ø A	B	L	ø A[2]	L	ø A	B	H	ø A	B	H	ø A	L	ø A	L
00	7.1	6.4	11.5	7.1	11.5	–	–	–	–	–	–	–	–	–	–	–	–	–	–	–	–	–	–
0S	9.1	8.3	13.5	9.1	13.5	12.1	10.6	19.0	10.1	9.1	15	–	–	–	–	–	–	–	–	–	–	9.1	16
1S	12.1	10.6	19.0	12.1	19.0	14.1	12.6	21.0	12.1	10.6	18	11.92	17.0	3.3	12.1	12.7	2.7	11.1	12.4	11.1	17	12.1	19
2S	15.1	13.6	21.5	15.1	21.5	16.2	14.6	22.0	16.1	15.1	23	–	–	3.3	15.1	15.5	–	–	–	–	–	–	–
3S	18.2	16.6	27.0	18.2	27.0	20.2	18.6	30.0	20.2	18.6	29	–	–	3.3	18.2	18.0	–	–	–	–	–	–	–
4S	25.2	23.6	34.0	25.2	34.0	25.2	23.6	36.0	25.2	23.6	36	–	–	–	–	–	–	–	–	–	–	–	–
5S	35.2[1]	33.6	44.0	35.2	44.0	35.2	33.6	47.0	35.2	33.6	47	–	–	4.4	35.2	36.8	–	–	–	–	–	–	–
6S	48.3	45.6	58.0	48.3	58.0	48.3	45.6	60.0	48.3	45.6	60	–	–	–	–	–	–	–	–	–	–	–	–

Note:
[1] for using the tapered washer a round hole ø 36 mm apply. [2] tolerance: $^{+0.02}_{0}$

Cut-out types

Model	Type	Model	Type	Model	Type	Model	Type	Model	Type
EBC	P6	EMD	P1	ERS	P2	FAA	P1/P2[3]	PSS	P1
EBD	P6	ERA	P1	ERT	P5	HCP	P3[4]	RAD	P1/P2[5]
EBS	P7	ERC	P1	ERY	P1	HGP	P3	SWH	P4
ECP	P1	ERD	P1	ERZ	P1	HGW	P11		
EEP	P1	ERM	P1	EXP	P2/P10	PSA	P1		
EHP	P2/P1	ERN	P1	EWB	P3	PSP	P1		

1 N = 0.102 kg

Note: [3] in series 6S use P2. [4] use only ø A in 1S series.
[5] in series 4S and 5S use P2.

Mounting nut torque

Series	Torque (Nm)	
	Metal shell	Plastic shell[6]
0S	2.5	0.4
1S	4.5	0.7
2S	6.0	0.8
3S	9.0	1.0
4S	12.0	5.0
5S	17.0	–
6S	22.0	–

Note: [6] these values apply when metal shell are mounted with insulating washer.

K series

Series	P1			P6			P7		
	ø A	B	L	ø A	B	H	ø A	B	H
0K	14.1	12.6	20.5	–	–	–	–	–	–
1K	16.1	14.6	22.5	–	–	–	–	–	–
2K	20.2	18.6	29.0	–	–	–	–	–	–
3K	24.2	22.6	35.5	3.5	22.6	20.6	3.5	23.1	23.0
4K	30.2	28.6	43.0	3.5	28.6	27.0	3.5	30.1	29.0
5K	45.2	42.6	57.0	4.5	42.6	38.0	4.5	45.1	44.0

Cut-out types

Model	Type	Model	Type	Model	Type
EBG	P7	ENG	P1	PBG	P7[3)]
EDG	P7[2)]	EVG	P1	PEG	P1
EEG	P1	FAG	P1	PKG	P1
EGG	P1	FXG	P6	S●●	P1
EHG	P1	HEG	P1		
EMG	P1	HGG	P1		

Mounting nut torque

Series	Torque (Nm)
0K	5
1K	7
2K	9
3K	12
4K	17
5K	22

1 N = 0.102 kg

Note: [2)] for this model dimension B = 18.1. [3)] for this model dimension B = 19.1.

E series

Series	P1			P6		
	ø A	B	L	ø A	B	H
0E	14.1	12.6	20.5	–	–	–
1E	16.1	14.6	22.5	–	–	–
2E	20.2	18.6	29.0	2.9	19.1	11.8x20.4
3E	24.2	22.6	35.5	–	–	–
4E	30.2	28.6	43.0	–	–	–
5E	45.2	42.6	57.0	–	–	–
6E	55.3	52.1	68.0	–	–	–

Cut-out types

Model	Type	Model	Type	Model	Type
EBR	P6	ERB	P1	PSA	P1
EEP	P1	ERC	P1	PSP	P1
EHP	P1	FAA	P1	SWH	P1
ERA	P1	HGP	P1		

Mounting nut torque

Series	Torque (Nm)
0E	5
1E	7
2E	9
3E	12
4E	17
5E	22
6E	27

1 N = 0.102 kg

Panel cut-out for mounting with insulating washer or double panel washer (S-B series)

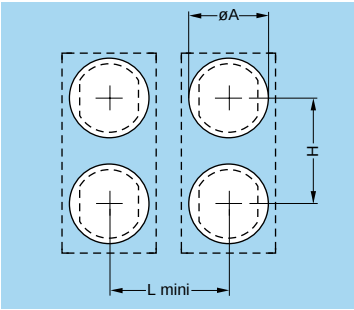

Series	Dimensions (mm)		
	ø A	H	L
0S-0B	11	14	13.5
1S-1B	14	20	17.0

Note: for nut tightening torques please refer to the corresponding series in the table on page 189.

PCB drilling pattern

Fixed socket with straight print contact (B-K series) P15

302

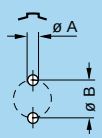

Series	Dimensions	
	A	B
00	0.6	1.2
0B-0K	0.8	2.2
1B-1K	0.8	2.8
2B-2K	0.8	4.4

303

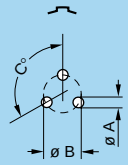

Series	Dimensions		
	A	B	C
00	0.6	1.35	120°
0B-0K	0.8	2.30	120°
1B-1K	0.8	3.00	120°
2B-2K	0.8	4.60	120°
3B-3K	0.8	5.60	120°

304

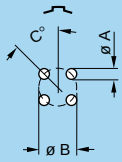

Series	Dimensions		
	A	B	C
00	0.6	1.6	45°
0B-0K	0.6	2.5	45°
1B-1K	0.8	3.1	45°
2B-2K	0.8	5.0	45°
3B-3K	0.8	6.2	45°

305

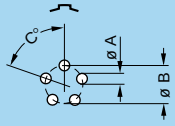

Series	Dimensions		
	A	B	C
0B-0K	0.6	2.8	72°
1B-1K	0.8	3.4	72°
2B-2K	0.8	5.2	72°

306

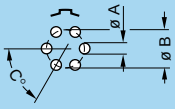

Series	Dimensions		
	A	B	C
0B-0K	0.6	3.0	60°
1B-1K	0.8	3.7	60°

306

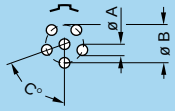

Series	Dimensions		
	A	B	C
2B-2K	0.8	5.6	72°

307

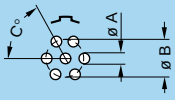

Series	Dimensions		
	A	B	C
0B-0K	0.6	3.0	60°
1B-1K	0.8	3.7	60°
2B-2K	0.8	5.8	60°

308

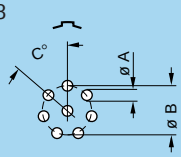

Series	Dimensions		
	A	B	C
1B-1K	0.8	3.8	51°26'

308

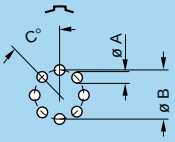

Series	Dimensions		
	A	B	C
2B-2K	0.8	6.4	45°
3B-3K	0.8	7.5	45°

309

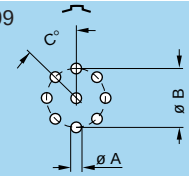

Series	Dimensions		
	A	B	C
3B-3K	0.8	7.5	45°

310

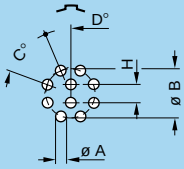

Series	Dimensions				
	A	B	C	D	H
1B-1K	0.6	3.95	45°	22°30'	1.40
2B-2K	0.8	6.20	45°	22°30'	2.15
3B-3K	0.8	7.90	45°	22°30'	2.80

312

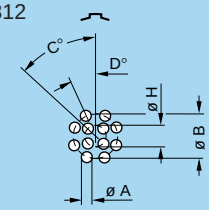

Series	Dimensions				
	A	B	C	D	H
2B-2K	0.8	6.50	45°	22°30'	2.80
3B-3K	0.8	8.20	45°	22°30'	3.40

314

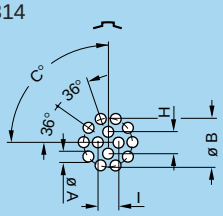

Series	Dimensions				
	A	B	C	H	I
1B-1K	0.6	4.4	90°	1.90	1.80
2B-2K	0.8	6.5	90°	2.65	2.65
3B-3K	0.8	8.2	90°	3.40	3.40

316

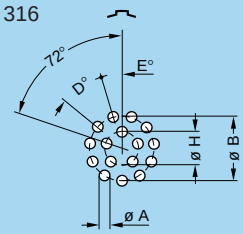

Series	Dimensions				
	A	B	D	E	H
1B-1K	0.6	4.4	32°44'	16°22'	2.00
2B-2K	0.8	6.6	32°44'	16°22'	3.10
3B-3K	0.8	8.4	32°44'	16°22'	3.86
4B-4K	0.6	10.5	32°44'	16°22'	5.00

318

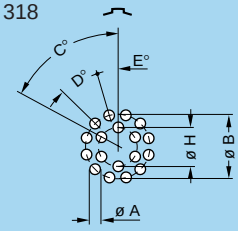

Series	Dimensions					
	A	B	C	D	E	H
2B-2K	0.8	6.7	60°	30°	15°	3.50
3B-3K	0.8	8.4	60°	30°	15°	4.34

319

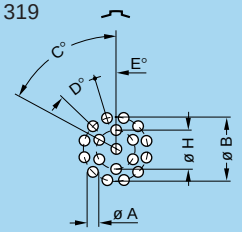

Series	Dimensions					
	A	B	C	D	E	H
2B-2K	0.8	6.7	60°	30°	15°	3.5

Note: all views are from the side of the socket.

320

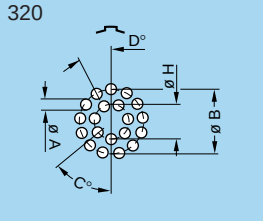

Series	Dimensions				
	A	B	C	D	H
3B-3K	0.6	8.62	51°26'	27°42'	4.78
4B-4K	0.6	11.00	51°26'	27°42'	6.00

322

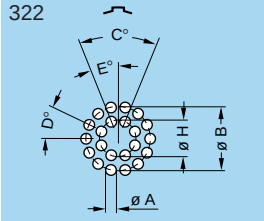

Series	Dimensions					
	A	B	C	D	E	H
3B-3K	0.6	8.8	45°	25°43'	22°30'	5

324

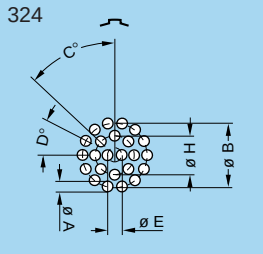

Series	Dimensions					
	A	B	C	D	E	H
3B-3K	0.6	8.8	45°	25°43'	1.8	5.30
4B-4K	0.6	11.1	45°	25°43'	2.2	6.65

2B-2K.326

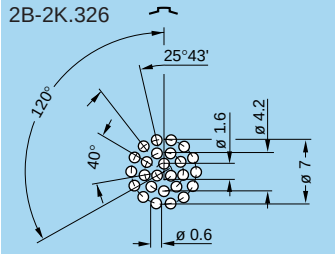

3B-3K.326

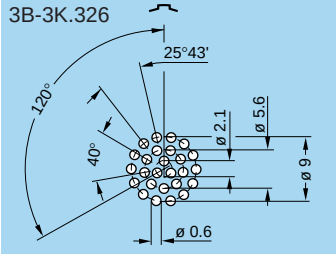

3B-3K.330

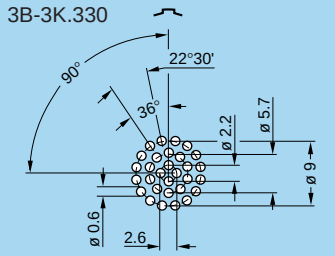

4B-4K.330

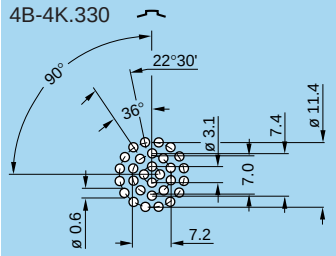

4B-4K.340

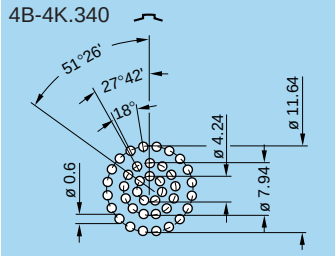

5B-5K.350

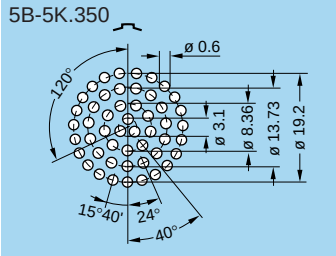

5B-5K.354

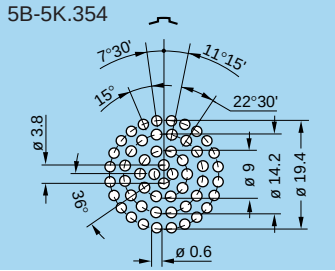

5B-5K.364

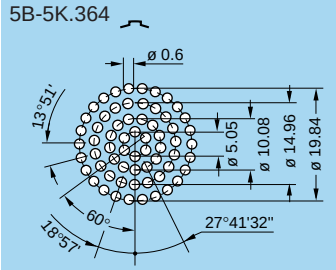

Length of straight print contacts (for socket E●●)

	Type	Dimensions	
		ø C	L
00	302	0.5	3.0
	303	0.5	3.0
	304	0.5	3.0
0B 0K	302/303	0.7	3.0
	304/305	0.5	3.0
	306/307	0.5	3.0
1B 1K	302/303/304/305	0.7	3.0
	306/307/308	0.7	3.0
	310/314/316	0.5	3.0
2B 2K	302	0.7	3.0
	303/304/305/306/307/308/310	0.7	5.0
	312/314/316/318/319	0.7	6.0
	326	0.5	3.0
3B 3K	303/304/308/309/310	0.7	3.0
	312/314/316/318	0.7	3.0
	320/322/324/326/328/330	0.5	4.5
4B 4K	316/320	0.5	5.0
	324/330	0.5	5.0
	340	0.5	5.0
5B 5K	350	0.5	5.0
	354	0.5	5.0
	364	0.5	5.0

Note: This table does not apply for socket H●●; socket EH● and plug FA●.

Length of straight print contacts (for socket EZG/EYG/XPF)

	Type	Models			
		EZG/EYG		XPF	
		ø C	L	ø C	L
0B	302/303	0.7	4.3	–	–
	304/305	0.5	4.3	0.7	2.9
	306/307	0.5/0.8	3/4.3	–	–
1B	302/303/304/305	0.7	3.6	–	–
	306/307/308	0.7	3.6	–	–
	310/314/316	0.7	3.6	–	–
2B	303/304/305/306/307/308/310	0.7	4	–	–
	312/314/316/318/319	0.7	5	–	–

E●●

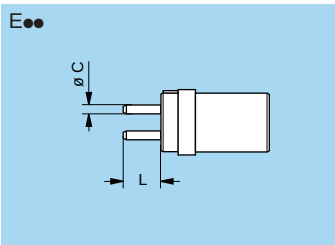

EZG/EYG/XPF

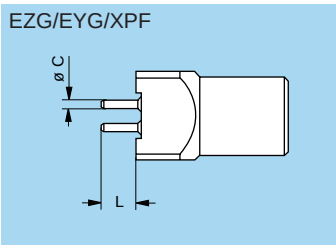

Fixed socket for printed circuit (B series) P16

Holes for fixing the housing

EYG-EZG

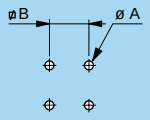

Series	Dimensions	
	A	B
00	0.8[1)]	5.08
0B	1.7[2)]	7.62
1B	1.7[2)]	7.62
2B	1.7[2)]	10.16

XPF.0B

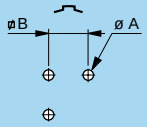

Series	Dimensions	
	A	B
0B	1.7	5.08

Note: 1) to solder. 2) to screw.

Fixed socket with elbow print contact (B-K series) P17

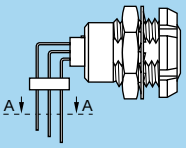

302

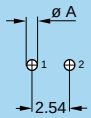

Series	Dim.
	A
0B-0K	0.7
1B-1K	0.9

303

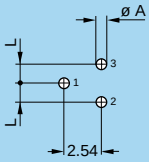

Series	Dim.	
	A	L
0B-0K	0.7	1.27
1B-1K	0.9	1.27
2B-2K	0.9	2.54

304

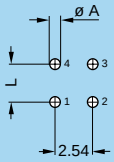

Series	Dim.	
	A	L
0B-0K	0.7	2.54
1B-1K	0.7	2.54
2B-2K	0.9	3.50

0B-0K.305

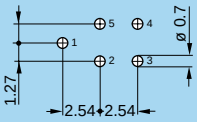

1B-1K.305

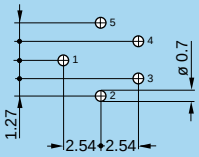

2B-2K.305

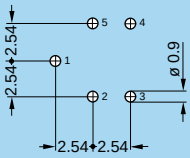

0B-0K / 1B-1K.306

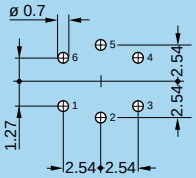

2B-2K.306

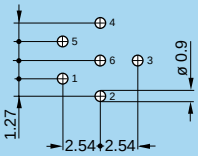

0B-0K / 1B-1K.307

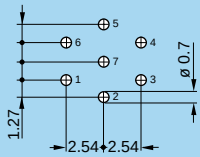

2B-2K.307

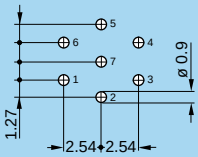

1B-1K.308

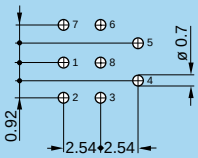

2B-2K.308

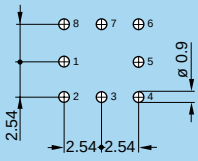

1B-1K / 2B-2K.310

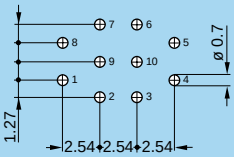

2B-2K / 3B-3K.312

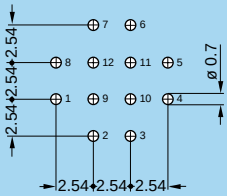

1B-1K / 2B-2K.314

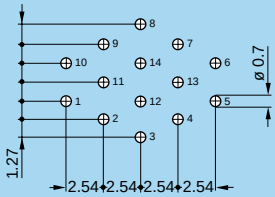

3B-3K.314

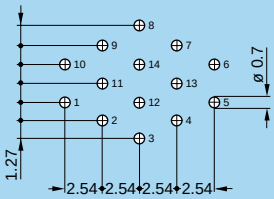

2B-2K / 3B-3K.316

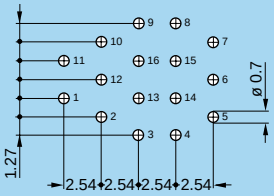

2B-2K.318

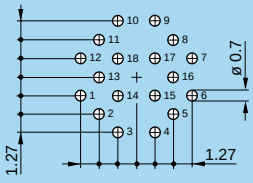

3B-3K.318

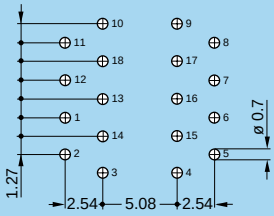

2B-2K.319

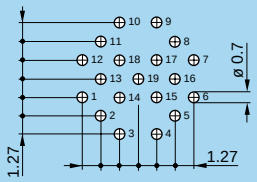

3B-3K.320

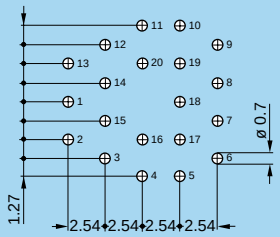

3B-3K.324

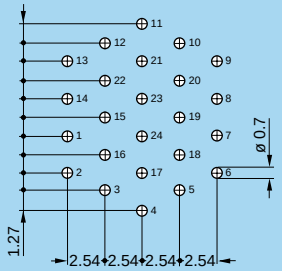

3B-3K.330

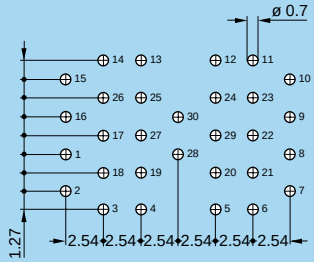

Elbow socket (90°) for printed circuit (B series) P18 P19 P20

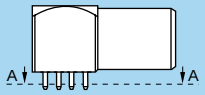

P18 - EPG.00.302 - XBG.00.302
XRB.00.302[1)]

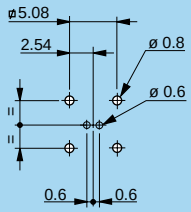

P18 - EPG.00.303 - XBG.00.303
XRB.00.303[1)]

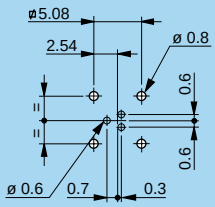

P18 - EPG.00.304 - XBG.00.304
XRB.00.304[1)]

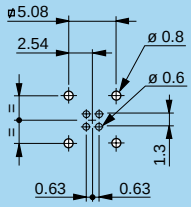

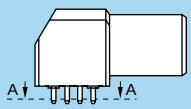

P19 - EPG-EXG
Solder mount

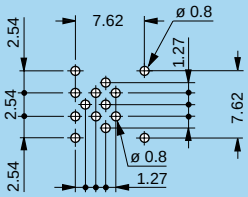

P19 - EPG-EXG
Screw mount

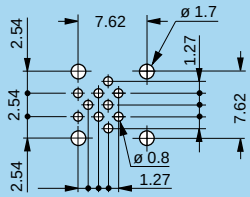

P20 - EPG.1B.314

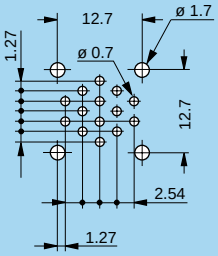

Note: [1)] for the XRB.00 series the holes for shell fixing are different (see p. 40).

Fixed socket with straight print contact (S-E series) P21

302

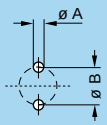

Series	Dimensions	
	A	B
0S-0E	0.6	2.2
1S-1E	0.8	3.0

303

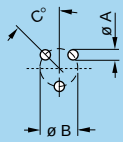

Series	Dimensions		
	A	B	C
0S-0E	0.6	2.8	45°
1S-1E	0.8	3.5	45°
2S-2E	0.8	5.5	60°

304

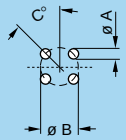

Series	Dimensions		
	A	B	C
0S-0E	0.6	2.8	45°
1S-1E	0.8	3.5	45°
2S-2E	0.8	5.0	45°

305

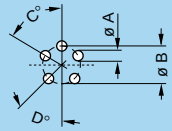

Series	Dimensions			
	A	B	C	D
1S-1E	0.8	3.5	60°	45°
2S-2E	0.8	5.5	60°	60°

306

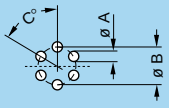

Series	Dimensions		
	A	B	C
1S-1E	0.8	3.5	60°
2S-2E	0.8	5.5	60°
3S-3E	0.8	6.5	60°

307

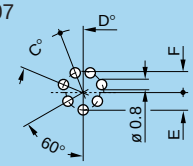

Series	Dimensions			
	C	D	E	F
2S-2E	45°	22°30'	2.75	3.25
3S-3E	45°	22°30'	3.25	3.90

Note: all views are from the side of the socket.

308

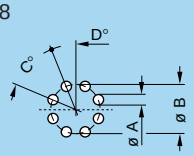

Series	Dimensions			
	A	B	C	D
2S-2E	0.8	6.5	45°	22°30'
3S-3E	0.8	7.8	45°	22°30'

310

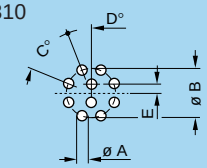

Series	Dimensions				
	A	B	C	D	E
2S-2E	0.8	6.5	45°	22°30'	1.25
3S-3E	0.8	7.8	45°	22°30'	1.50

3S-3E.312

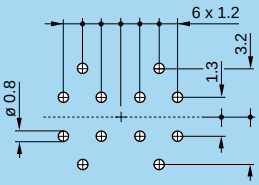

3S-3E.313

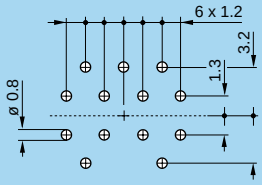

3S-3E.314

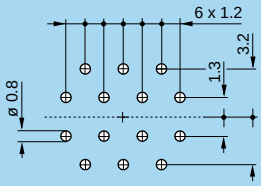

3S-3E.316

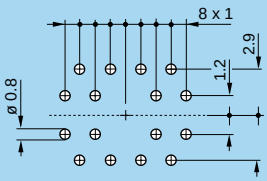

3S-3E.318

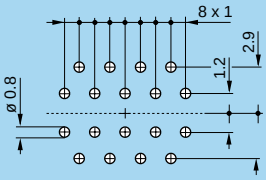

Length of straight print contacts (for socket E●●)

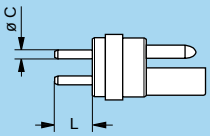

	Type	Dimensions	
		ø C	L
0S 0E	302	0.7	3.0
	303	0.5	3.0
	304	0.5	3.0
1S 1E	302	0.7	3.0
	303/304/305	0.7	3.0
	305/306	0.5	3.0
2S 2E	303/304/305	0.8	3.0
	306/307	0.8	3.0
	307/308/310	0.7	3.0
3S 3E	305/306/307/308/310	0.7	3.0
	312/313/314	0.7	3.0
	316/318	0.7	3.0

Note: This table does not apply for HGP and EHP sockets and for FAA plugs.

Elbow socket (90°) for printed circuit (S series) P22 P23

P22 - EPL - EXP
Solder mount

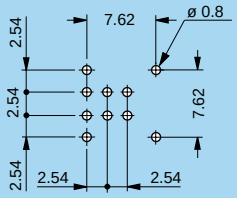

P22 - EPL - EXP
Screw mount

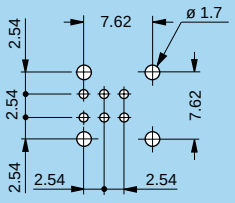

P23 - EPL.0S.116

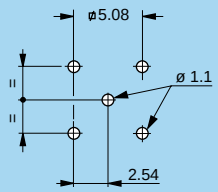

Note: all dimensions are in millimetres.

Fixed socket with elbow print contact (S-E series) P24

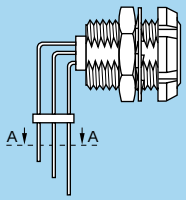

302

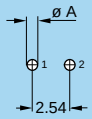

Series	Dim.
	A
0S-0E	0.7
1S-1E	0.9

303

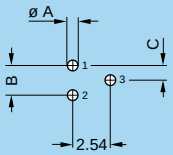

Series	Dimensions		
	A	B	C
0S-0E	0.7	2.00	1.00
1S-1E	0.7	2.48	1.24

304

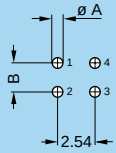

Series	Dimensions	
	A	B
0S-0E	0.7	2.00
1S-1E	0.7	3.50
2S-2E	0.9	3.50

1S-1E.305

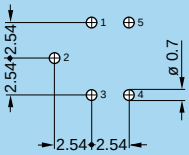

1S-1E.306

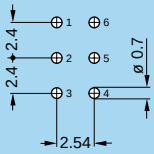

2S-2E.306

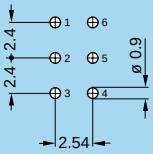

2S-2E.307

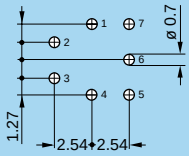

2S-2E.308

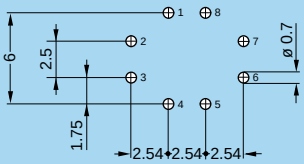

2S-2E / 3S-3E.310

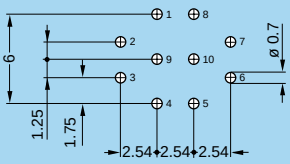

3S-3E.312

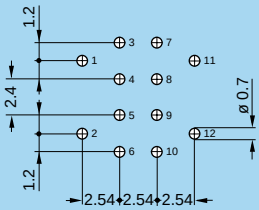

3S-3E.314

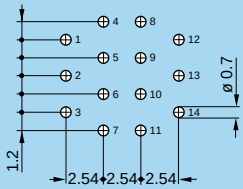

3S-3E.316

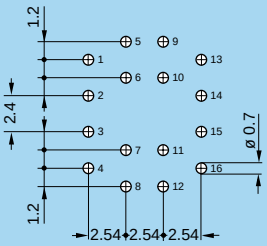

Technical characteristics

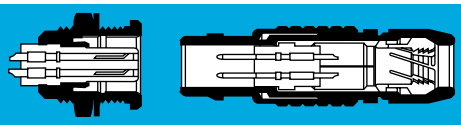

Outer shell

Brass

In most cases, LEMO connectors have a brass outer shell which is suitable for most general purpose applications, including civilian and military. The brass outer shells have a chrome nickel-plated surface which ensures very good protection against industrial atmosphere, salt air and most corrosive agents.

Alternative protective coatings are available to satisfy other specific environmental conditions:
– electrolytic nickel
– nickel-gold
– nickel-black chrome. After the black chrome treatment, the part is coated with a protective organic film.

Stainless steel

For applications where there are severe environmental conditions that may rapidly damage the surface finish, we recommend using stainless steel. The AISI 303 stainless steel is a material for general use adapted to most applications requiring a product made entirely of stainless metal.

For the nuclear industry where elements are subject to radiation and to vaporous nitric acid, we offer AISI 304 stainless steel.

Grade AISI 316L is recommended for medical applications, highly demanding with regard to non-corrosiveness. This material is also used for connector shells soldered by electronic beam onto a device made of the same stainless steel.
These parts have no surface treatment.

Aluminium alloy

The aluminium alloy outer shells find numerous applications where light weight is a predominant factor; such as in the aeronautics and space industries, and for portable and mobile equipment.
These materials have high mechanical strength and excellent resistance to corrosion. The shell surface is protected by anodizing which is available in six colours: blue, yellow, black, red, green, and natural.

For connector series used for highly demanding applications (F series), shells are made of high mechanical strength alloys (Avional). Connector shells are protected by a conductive anthracite grey coloured nickel finish.
Depending on the application, other surface finish is also available (electrolytic nickel-plating, black nickel plating).

Plastic materials

Some connector model shells can be made of plastic. This solution offers optimum electrical insulating properties particularly suitable for medical applications. Black Polyoxymethylene (POM) is particularly adapted to products of the 00 or S series.
Grey or white polysulfone (PSU) and beige PEEK offers excellent mechanical properties and is suitable for gas or vapour sterilization.
Some models of the 2B and 3B series are available with an outer shell of cream-coloured polyphenylsulfone (PPSU). We recommend this material particularly for applications where products are to withstand hundreds of vapour sterilization cycles.

Bridge plug or plugs with parallel sockets are made of polyamide (PA.6) available in 9 colours: blue, white, grey, yellow, brown, black, red, orange and green.

Some elbow socket shells for printed circuits are overmoulded in polyphenilene sulfide (PPS).

Other metallic components

In general, most metallic components are manufactured in brass. However, bronze or beryllium copper are used where good elasticity is required (for example: earthing crown). Depending on the application, these parts have electrolytic nickel or nickel-gold plating.
These parts can also be manufactured in stainless steel.

Sealing gasket

In general, sealing gaskets are made of silicone rubber MQ/MVQ. However, for vacuumtight sockets and couplers, gaskets are made of fluorosilicone rubber (FPM).

Sealing resin

An epoxy resin is used to seal both watertight and vacuumtight socket and coupler models.

Materials and Treatments

Component	Material (Standard)	Surface treatment (µm)										Notes
		chrome			nickel		gold			black chr.		
		Cu	Ni	Cr	Cu	Ni	Cu	Ni	Au	Ni	Cr	
Outer shell, collet nut, conical nut or notched nut and oversized collet	Brass (UNS C 38500)	0.5	3	0.3	0.5	3	0.5	3	0.5	1	2	
	Stainless steel (AISI 303, 304 or 316L)	without treatment										
	Avional (AA 2007)	–	–	–	–	5	–	–	–	–	–	1)
	Aluminium alloy (AA 6012)	anodized										
	POM (Delrin® or Ertacetal®), Polyoxymethylene, black	–										2)
	PEEK, Polyether ethercetone, beige	–										3)
	PSU (Udel®), Polysulfone, grey or white	–										4)
	PPSU (Radel®), Polyphenylsulfone, cream	–										4)
	PA.6 (Grilon®), Polyamid	–										5)
	PPS (Ryton®), Polyphenilene sulfide, brown	–										6)
Earthing crown	Bronze (UNS C 54400) or special brass	–	–	–	0.5	3	0.5	3	1.0	–	–	7)
	Beryllium Copper (UNS C 17300)	–	–	–	0.5	3	0.5	3	1.0	–	–	8)
	Stainless steel (AISI 416 or 316L)	without treatment										9)
Latch sleeve	Special brass	0.5	3	0.3	0.5	3	0.5	3	0.5	–	–	
	Stainless steel (AISI 416 or 316L)	without treatment										9)
Locking washer	Bronze (UNS C 52100)	–	–	–	0.5	3	0.5	3	0.5	–	–	
Hexagonal or round nut	Brass (UNS C 38500)											
	Stainless steel (AISI 303, 304 or 316L)	without treatment										10)
	Aluminium alloy (AA 6012)	anodized natural										10)
Other metallic components	Brass (UNS C 38500)	–	–	–	0.5	3	0.5	3	0.5	–	–	
	Stainless steel (AISI 303, 304 or 316L)	without treatment										
O-ring and gaskets	Silicone MQ/MVQ or FPM/FKM (Viton®)	–										11)
Sealing resin	Epoxy (Araldite® or Stycast®)	–										

Notes:
standards for surface treatment are as follows:
– chrome-plated: FS QQ-C-320B
– nickel-plated: FS QQ-N-290A, or MIL-C-26074C
– gold-plated: ISO 4523
– black chrome: MIL-C-14538C with a minimum of 10 µm of lacquer protection

1) anthracite colour (other colours upon request)
2) for FFP, PCP and ERN models of the 0S to 3S series
3) for FFP, PCP and ERN models of the 0S to 3S series and FGG and ENG models of the 1B, 3B and 4B series
4) for the FGY and ENY models of the 2B and 3B series
5) for bridge plugs of the B series
6) for S and B series elbow sockets for printed circuits
7) gold-plating for unipole types
8) used in 00 series free and fixed sockets and couplers
9) AISI 416 steel is used with shells made of AISI 303 or 304
10) delivered with free and fixed sockets with aluminium alloy or stainless steel shell
11) FKM is used for F series

Technical characteristics of plastic materials

Type	Norme	Units	POM	PEEK	PSU	PPSU	PPS	PA.6	Silicone	FPM	Epoxy
Density	ASTM D 792	–	1.4	1.3-1.4	1.24	1.3	1.67	1.14	~1.2	~1.9	1.58
Tensile strength (at 23°C)	ASTM D 638/ ISO R527	MPa	70-80	92-142	70	70	121	55	> 9	> 12	16
Flexurale strength (at 23°C)	ASTM D 790/ ISO R178	MPA	–	170	106	91	179	75	–	–	24
Dielectric strength	ASTM D 149/IEC 60243	kV/mm	60	19-25	17-20	15	17	35	18-30	–	15
Volume resis. at 50% HR and 23°C	ASTM D 257/IEC 60093	Ω • cm	10^{15}	10^{16}	$5x10^{16}$	–	10^{16}	10^{15}	10^{14}	–	10^{14}
Surface resistivity	ASTM D 257	Ω	10^{13}	10^{15}	–	–	–	–	–	–	–
Thermal conductivity	ASTM C 177	W/K • m	0.31	0.25	0.26	–	0.3	–	–	–	0.8
Comparative tracking index	IEC 60112	V	CTI 600	CTI 150	CTI 150	–	CTI 200	CTI 600	–	–	CTI>600
Maxi. continuous service temperature	UL 746	°C	90	250	140	180	220	80	200	200	80
Min. continuous service temperature	UL 746	°C	-50	-55	-60	-50	-60	-40	-50	-20	-20
Max. short-time service temperature	–	°C	140	300	160	200	250	150	> 250	300	120
Water absorption in 24h at 23°C	ASTM D 570/ISO R62A	%	0.85	0.12	0.3	0.37	< 0.05	> 3	–	–	0.25
Radiation resistance	–	Gy[1)]	$8x10^3$	10^7	10^5	–	$> 10^7$	$5x10^3$	10^5	$8x10^4$	$2x10^6$
Flammability rating	ASTM D 635/UL 94	–	HB	V-0/3.2	V-0/4.4	V-0/1.6	V-0/5V	V-2	–	–	V-0/4
Resistance to steam sterilization	–	°C	bad	excel.	good	excel.	excel.	bad	good	good	bad

Notes: 1) 1 Gy (Gray) = 100 rad

ASTM = American Society for Testing Material
ISO = International Standards Organisation
UL = Underwriters Laboratories
IEC = International Electrotechnical Commission

Mechanical latching characteristics

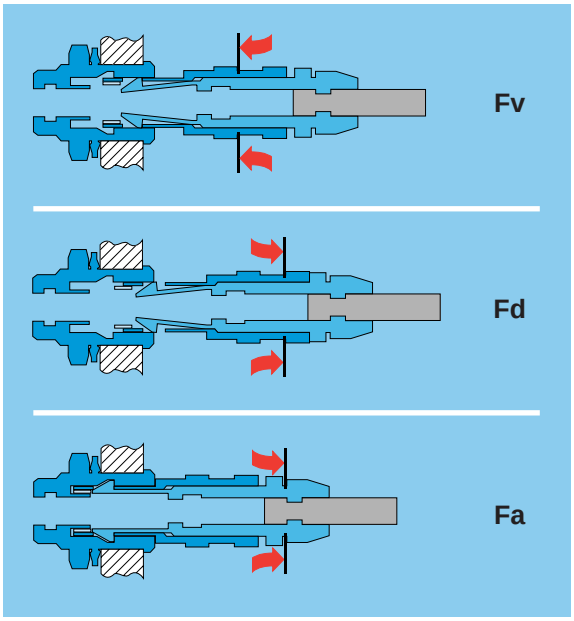

F_v: average latching force.

F_d: average unmating force with axial pull on the outer shell.

F_a: average pull force with axial pull on the collet nut

Standard series

Force (N)	Series									
	00	0S	1D	1S	2C	2S	3S	4S	5S	6S
Fv	9	14	14	15	12	17	20	40	60	70
Fd	7	9	11	10	12	11	14	25	40	55
Fa	120	140	300	250	400	350	500	650	750	900

Watertight series

Force (N)	Series						
	0E	1E	2E	3E	4E	5E	6E
Fv	14	16	20	32	65	85	100
Fd	9	10	13	25	40	60	75
Fa	250	300	400	550	700	800	900

Keyed series

Force (N)	Series							
	00	0B	1B	2B	2G	3B	4B	5B
Fv	9	10	14	15	12	17	39	48
Fd	7	8	11	12	12	14	38	38
Fa	120	250	300	400	400	550	700	800

Keyed watertight series

Force (N)	Series						Series					
	0K	1K	2K	3K	4K	5K	0F	1F	2F	3F	4F	5F
Fv	14	16	20	32	65	85	6	6	8	9	14	21
Fd	9	10	13	25	40	60	8	8	9	11	16	24
Fa	250	300	400	550	700	800	150	150	150	150	150	150

Notes: forces were measured on outer shells **not fitted with contacts**.
Mechanical endurance: 5000 cycles.
Mechanical endurance represents the number of cycles after which the latching system is still effective (1 cycle = 1 latching/unlatching at 300 cycles per hour). The values were measured according to the standard IEC 60512-7 test 13a.

1N = 0.102 kg.

Electromagnetic compatibility (EMC) and shielding efficiency

The electromagnetic compatibility of a device can only be ensured by meeting a number of basic rules with the design of the device and by carefully selecting components, cables and connectors.

Electrical and electronic devices are to be designed to ensure the following:

a) reduce the emission of generated electromagnetic disturbance to a level where radios and telecommunication and other devices can properly function;
b) electromagnetic immunity against electromagnetic disturbance so that they can properly function.

When selecting a connector, screen or shielding efficiency and low resistance to electric continuity between the cable and the connector should be considered.
The design of LEMO connectors with metal shell and earthing crown guarantee optimum shielding efficiency in all applications where electromagnetic compatibility (EMC) is critical.
The performance of a connector is measured through shielding efficiency, a value that represents the ratio between the electromagnetic field on the outside and the inside of the shell. Our measurements are carried out according to the IEC 60169-1-3 standard.

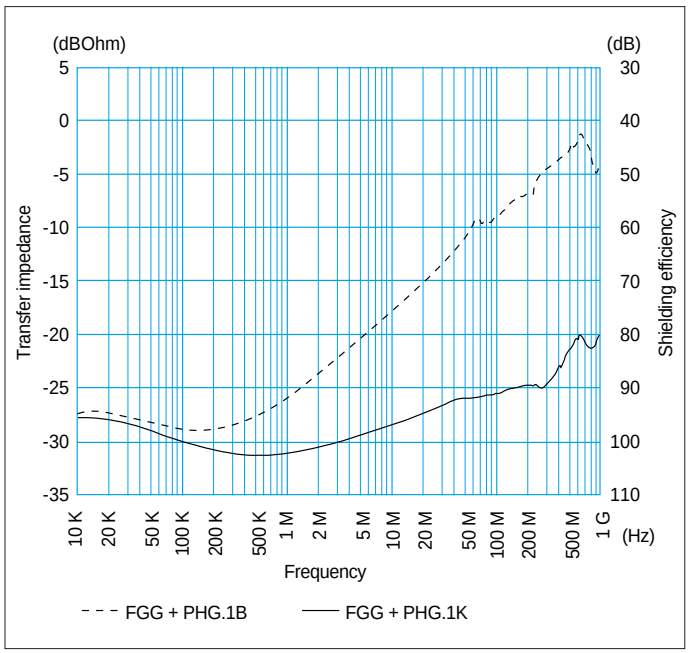

The performance of S and B series connectors is comparable to the results of measurements carried out on a pair of FGG + PHG.1B connectors.

The performance of E and K series connectors is comparable to the results of measurements carried out on a pair of FGG + PHG.1K connectors.

Shell electrical continuity:
(measured according to IEC 60512-2 test 2f)

Test current: 1A
A = Ammeter
mV = Millivoltmeter
G = Generator

R_1 Values with earthing crown and latch sleeve or inner-sleeve nickel-plated.

R_2 Values with gold-plated earthing crown and nickel-plated latch sleeve or inner sleeve.

Standard series

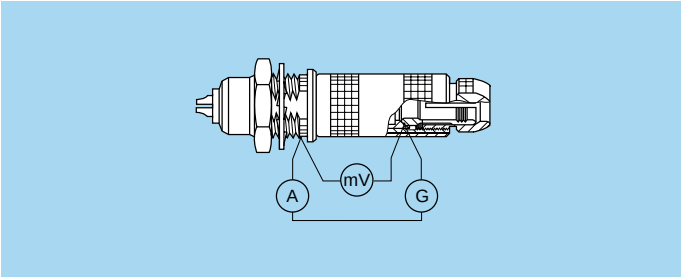

Series	R_1 (mΩ)	R_2 (mΩ)
00	3.5	2.8
0S	2.8	1.6
1D	2.5	1.1
1S	2.2	1.5
2C	–	–

Series	R_1 (mΩ)	R_2 (mΩ)
2S	1.8	1.2
3S	1.6	1.2
4S	1.4	1.0
5S	1.4	1.0
6S	1.0	0.5

Keyed series

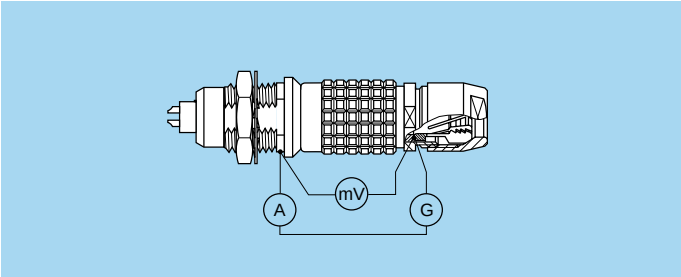

Series	R_1 (mΩ)	R_2 (mΩ)
00	3.5	2.8
0B	3.5	1.3
1B	2.5	1.1
2B	2.2	0.9

Series	R_1 (mΩ)	R_2 (mΩ)
2G	–	–
3B	2.2	0.7
4B	1.5	0.5
5B	1.5	0.3

Watertight series
Keyed watertight series

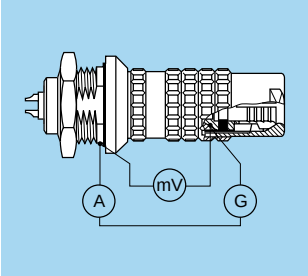

F series

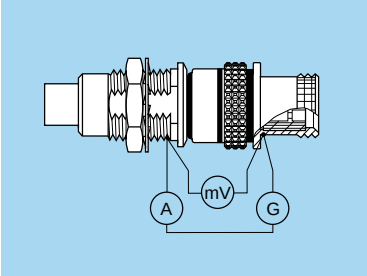

Series	R_1 (mΩ)	R_2 (mΩ)
0E-0K	2.8	1.6
1E-1K	2.2	1.5
2E-2K	1.8	1.2
3E-3K	1.6	1.2
4E-4K	1.4	1.0
5E-5K	1.4	1.0
6E	1.0	0.5

Series	R_1 (mΩ)
0F	5.0
1F	3.0
2F	2.5
3F	2.5
4F	2.0
5F	1.5

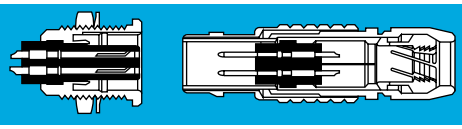

Insulator

Plastic material used by LEMO for manufacturing insulators is selected according to the electric and thermal properties required for the various connector types. Characteristics examined for the two connector types are:
– Dielectric strength;
– Comparative tracking index;
– Surface and volume resistivity;
– Continuous service temperature;
– Water absorption;
– Radiation resistance;
– Flammability rating
– Resistance to hydrocarbon.

Mechanical and Electrical Properties

Mechanical characteristics of thermoplastics, such as PA 6.6, and PEEK, are improved by the addition of glass fibres. By adding glass fibres in the resin the performance of this material (mechanical strength and radiation resistance) is enhanced and water absorption rate is reduced. From an electric point of view, the addition of glass fibres improves dielectric strength.

Selection of the insulator

A number of thermoplastics have common characteristics, some of them are identical with other insulating materials. In this case, the insulator material is selected according to the specific difference in features to provide all the required parameters for the given type.

Radiation resistance

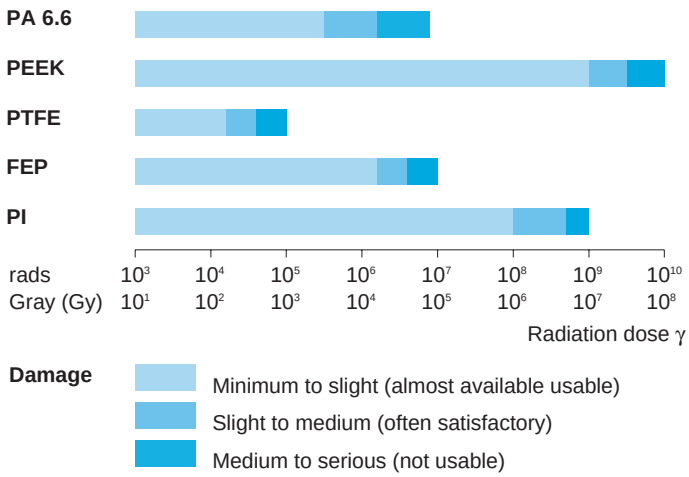

Note: technical data in this chapter provide general information on plastics used by LEMO as electrical insulators. LEMO reserves the right to propose new materials with better technical characteristics, and to withdraw, without notice, any material mentioned in the present catalogue or any other publications edited by LEMO S.A. and/or its subsidiaries. LEMO SA and its subsidiaries use only plastic granules, powder or bars supplied by specialized companies, and thus cannot in any case take responsibility with regard to this material.

Technical characteristics

Type	Standard	Units	PA6.6	PEEK	PTFE	FEP	PI
Dielectric strength	ASTM D 149 / IEC 60243	kV/mm	15-17	19-25	17.2-24	20	22
Volume resistivity at 50% RH and 23°C	ASTM D 257 / IEC 60093	Ω • cm	5.8×10^{15}	10^{16}	10^{18}	> 10^{16}	> 10^{16}
Surface resistivity	ASTM D 257 / IEC 60093	Ω	10^{12}	10^{15}	10^{17}	> 10^{16}	> 10^{15}
Thermal conductivity	ASTM C 177	W/K • m	0.21	0.25	0.23	0.24	0.35
Comparative tracking index	IEC 60112	V	CTI 600	CTI 150	CTI 500	–	–
Dielectric constant (10^6 Hz)	ASTM D 150 / IEC 60250	–	4	3.2-3.5	2-2.1	2.1	3.6
Dissipation factor (10^6 Hz)	ASTM D 150 / IEC 60250	–	–	< 0.005	< 0.0003	< 0.001	< 0.0034
Maximum continuous service temperature	UL 746	°C	120	250	260	200	350
Maximum short-time service temperature	–	°C	150	300	300	260	480
Minimum continuous service temperature	–	°C	–	-50	-200	-200	–
Water absorption in 24h at 23°C	ASTM D 570 / ISO R624	%	< 0.7	< 0.3	< 0.01	< 0.01	0.24
Radiation resistance	–	Gy	5×10^3	10^7	2×10^2	2×10^4	10^6
Flammability rating	ASTM D 635 / UL 94	–	–	V-0/3.2	V-0	V-0	–

Note: values of insulation resistance between contacts are given on page 203.

Designation		Symbol	Standard	Unipole			Multipole								
chemical	commercial			00	S	E	00	S	E	B	K	F	2C	2G	1D
Polyamide (glass fitted)	Nylatron®	PA 6.6	–					●	●						●
Polyether Ethercetone	Peek®	PEEK	–	○	○	○	●	●	●	●	●	●	●	●	
Polytetrafluorethylene	–	PTFE	ASTM D 1457-83	●	●	●									
Tetrafluorethylene	–	FEP	ASTM D 2116-81					○	○						
Polyimide	Vespel®	PI	–					○	○						

● First choice alternative ○ Special order alternative

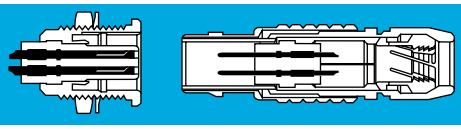

Electrical contact

Technical description

The secure reliable electromechanical connection achieved with LEMO female cylindrical contacts is mainly due to two important design features :

1. *Prod proof entry* on the mating side which ensures perfect concentric mating even with carelessly handled connectors.
2. *The pressure spring*, with good elasticity, maintains a constant even force on the male contact when mated. The leading edge of the pressure spring preserves the surface treatment (gold-plated) and prevents undue wear.

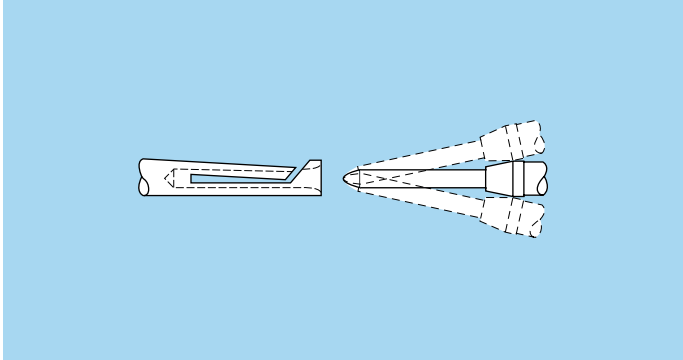

Contact material and treatment

LEMO female contacts are made of bronze beryllium (QQ-C-530) or bronze (UNS C 54400). These materials are chosen because of their high modulus of elasticity, their excellent electrical conductivity and a high mechanical strength.

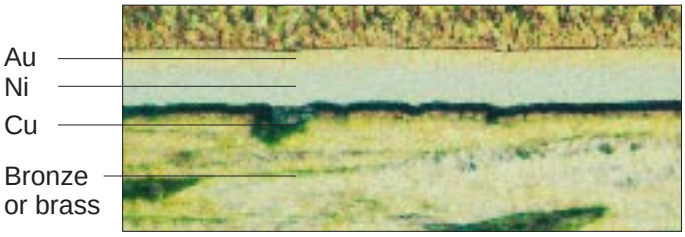

LEMO male solder and print contacts are made of brass (UNS C 38500). Male crimp contacts are made of brass (UNS C 34500) or annealed brass (UNS C 38500) with optimum hardness (HV) for crimping onto the wire.

Type	Material (standard)	Surf. treatment (µm)		
		Cu	Ni	Au[1]
Male crimp	Brass (UNS C 34500)	0.5	3	1.0
	Brass (UNS C 38500)			
Male print	Brass (UNS C 38500)			
Femalle crimp	Bronze (UNS C 54400) Cu-Be (FS QQ-C-530)	0.5	3	1.5
Female print				
Clips	Cu-Be (FS QQ-C-530)	–	–	–
	Stainless steel			
Wire[2]	Brass	–	3[3]	–

Notes: the standard surface treatment are as follows:
– nickel: FS QQ-N-290A or MIL-C-26074C
– gold: ISO 4523.
[1] minimum value
[2] for elbow print contacts
[3] treatment completed by 6 µm Sn-Pb tin-plating

Thickness comparison between the outside and the inside of female contacts

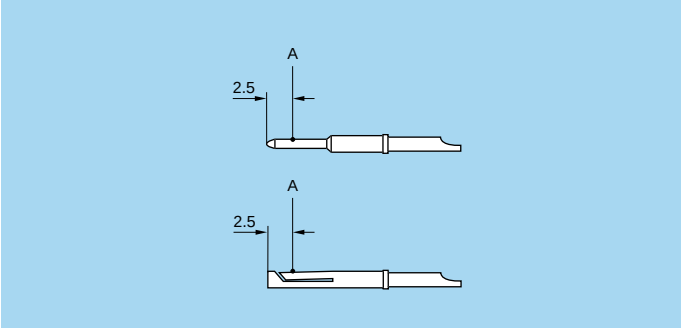

Note: A = inspection point

Contact ø A (mm)	Gold thickness		
	male (µm)	female	
		outside (µm)	inside (%)
0.5	1.0	1.5	65
0.7	1.0	1.5	70
0.9	1.0	1.5	75
1.3	1.0	1.5	75
1.6	1.0	1.5	75
2.0	1.0	1.5	75
3.0	1.0	1.5	75
4.0	1.0	1.5	75
5.0	1.0	1.5	75
6.0	1.0	1.5	75
8.0	1.0	1.5	75
12.0[1]	–	–	–

Notes: [1] contacts are silver plated

Contact resistance with relation to the number of mating cyles

(measured according to IEC 60512-2 test 2a)

Maximum values measured after the mating cycles and the salt spray test according to IEC 60512-6 test 11f.

A ø (mm)	Contact resistance (mΩ)			A ø (mm)	Contact resistance (mΩ)		
	1000 cycles	3000 cycles	5000 cycles		1000 cycles	3000 cycles	5000 cycles
0.5	7.5	8.3	8.7	3.0	2.0	2.2	3.1
0.7	5.6	5.7	6.1	4.0	1.6	2.0	2.8
0.9	4.1	4.2	4.8	5.0	1.4	–	–
1.3	2.8	2.9	3.6	6.0	1.2	–	–
1.6	2.6	2.7	3.5	8.0	0.8	–	–
2.0	2.9	3.1	3.3	12.0	0.7	–	–

Insulation resistance between the contacts and contact/shell

(measured according to IEC 60512-2 test 3a)

Insulating material	Multipole	Unipole
	PEEK	PTFE
new	> 10^{12} Ω	> 10^{12} Ω
after humidity test[1)]	> 10^{10} Ω	> 10^{10} Ω

Note:
[1)] 21 days at 95% RH according to IEC 60068-2-3.

Solder contacts

The conductor bucket of these contacts is machined at an angle to form a cup into which the solder can flow.
See page 9 for the range of cable dimensions that can be soldered.

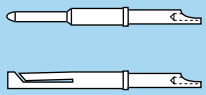

Crimp contacts

The square form crimp method is used (MIL-C-22520F, class I, type 2) photo 1 for unipole contacts.

For multipole contacts the standard four identer crimp method is used, MIL-C-22520F, class I, type 1), photo 2.
The crimp method requires a controlled compression to obtain a symmetrical deformation of the conductor strand and of the contact material. The radial hole in the side of the contact makes it possible to check whether the conductor is correctly positioned within the contact. A good crimping is characterized by only slightly reduced conductor section and practically no gap.
For optimum crimping of bronze or brass contacts they are annealed to relieve internal stress and reduce material hardening during the crimping process.
Only the crimping zone is annealed with the help of an induction heating machine designed by the LEMO Research and Development Department (see photo 3).

Advantages of crimping

- practical, quick contact fixing outside the insulator
- possible use at high temperature
- no risk of heating the insulator during the conductor-contact fixing
- high tensile strength

Crimp contacts are available in standard version (form 1) for mounting maximum size conductors.
For some dimensions, these crimp contacts can be produced with reduced crimp barrels (form 2) for mounting reduced size conductors.

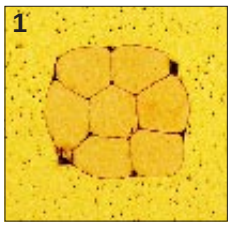

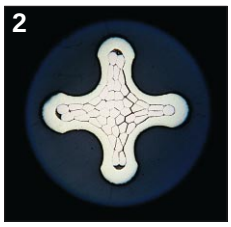

Crimp contacts

The crimp contacts can be with two forms: a standard crimp barrel for large conductors (see fig. 1) or with a reduced crimp barrel for smaller conductors (see fig. 2).

The range of cable dimensions that can be crimped into our contacts are indicated on the table on page 9.

Fig. 1

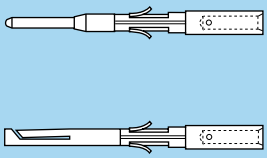

Fig. 2

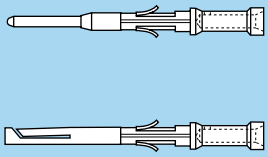

Print contacts

Print contacts are available in straight or elbow versions for certain connector types, mostly for straight and elbow socket models. Connection is made on flexible or rigid printed circuits by soldering.
Straight print contacts are gold-plated which guarantees optimum soldering, even after long-term storage. However for wave soldering, we recommend removal the gold-plating from the contact end on the printed circuit side before soldering according to the assembly procedures.
Print elbow contacts include a tinned brass wire crimped into a crimp contact.

straight

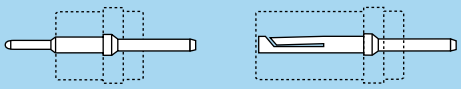

elbow

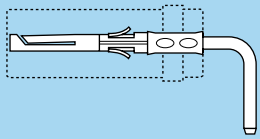

Test voltage

Test voltage (Ue) :
(measured according to the IEC 60512-2 test 4a standard)

It corresponds to 75% of the mean breakdown voltage.
Test voltage is applied at 500 V/s and the test duration is 1 minute.

This test has been carried out with a mated plug and socket, with power supply only on the plug end.

Operating voltage (Us) :
It is proposed according to the following ratio : $Us = \frac{Ue}{3}$

Caution:
For a number of applications, safety requirements for electrical appliances are more severe with regard to operating voltage.
In such cases operating voltage is defined according to creepage distance and air clearance) between live parts.
Please consult us for the choice of a connector by indicating the safety standard to be met by the product.

Voltage values are given in the table on insulator types for each series.
They correspond with values measured at sea level. They are adapted to all applications up to an altitude of 2000 m.

In case a device is used at a higher altitude, air clearance between live parts has to be multiplied by the following coefficients.
It means also that test voltage has to be divided by this coefficient.

altitude (m)	coefficient
2000	1.00
3000	1.14
4000	1.29
5000	1.48

Rated current

(measured according to IEC 60512-3 test 5a)

The specified rated current can be applied simultaneously to all the contacts.
It corresponds with an average temperature rise of 40°C of the connector.

The current values are indicated in the table of insulator types in each series.
For use at higher temperatures acceptable rated current will be lower. It tends towards zero as the material is used at the maximum operating temperature accepted for the insulator.

In most case the current depend on the conductor dimension (see table on page 210) or on the printed circuit dimension.

Caution:
In general, connectors should not be unmated while live.

For connectors with PEEK insulator, maximum admissible current will follow the curve below depending on the operating temperature T.

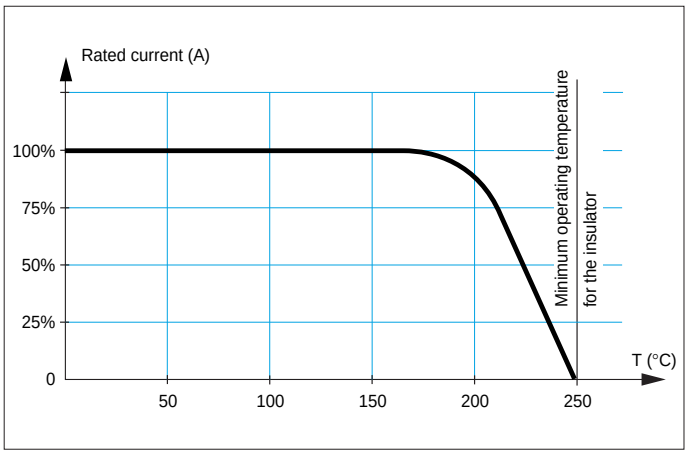

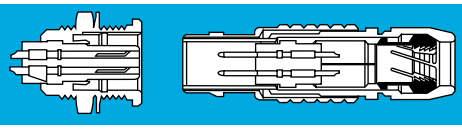

Cable fixing

Cables are fixed into LEMO connectors with cable collet systems. These collets with latches have a design which is very similar to those used for tool machines. This solution guarantees excellent cable retention and ensures perfectly symmetrical deformation of the cable.
The 00 multipole series is also available with hexagonal crimping (MIL-C-22520F).
In the F series cable fixing is ensured by " tie-wrap " junction of the cable screen on the connector outer shell and a thermofit jacket.

Material and treatment

Component	Material (standard)	Surface treatment (µm)				
		Nickel		Gold		
		Cu	Ni	Cu	Ni	Au
Center piece	Brass (UNS C 38500)	0.5	3	–	–	–
Collet	Brass (UNS C 38500)	0.5	3	–	–	–
Crimp ferrule	Copper (UNS C 18700)	0.5	3	0.5	3	0.5
Reducer	Brass (UNS C 38500)	0.5	3	–	–	–
Reducing cone	Brass (UNS C 38500)	0.5	3	–	–	–
Earthing cone	Brass (UNS C 38500)	0.5	3	–	–	–
Metal washer	Brass (UNS C 38500)	0.5	3	–	–	–
Gasket	Silicone MQ/MVQ	–				
	FPM (Viton®)					

Notes:
standards for surface treatment are as follows:
– nickel-plated: FS QQ-N-290A

Cable clamping

Type C cable clamping (S, E and 2C series)

This system includes an earthing centre-piece ③ or ④ and a collet ② which is compressed by the collet nut ① to ensure a good clamping to the cable. When assembling the cable, the cable shield is gripped between the earthing centre-piece and the collet. The earthing centre-piece design depends on the connector type. It is:
– in one single part with opening ③ for S and E series unipole and multipole series with contacts only on the circumference of the insulator;
– in two parts ④ for multipole type connectors with contacts on the circumference and the centre of the insulator.

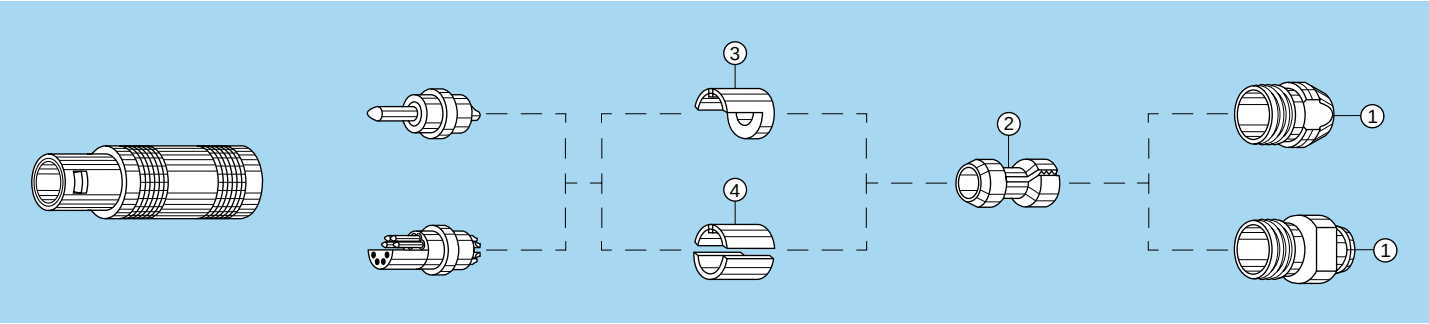

In standard watertight series (0E to 5E), C type clamping is completed by a flexible gasket ⑥ providing for watertightness on the cable end, by a metal washer ⑤ which prevents the gasket from rotating during the clamping; and by an earthing cone ⑦ which tightens the screen onto the earthing centre-piece ③ or ④.

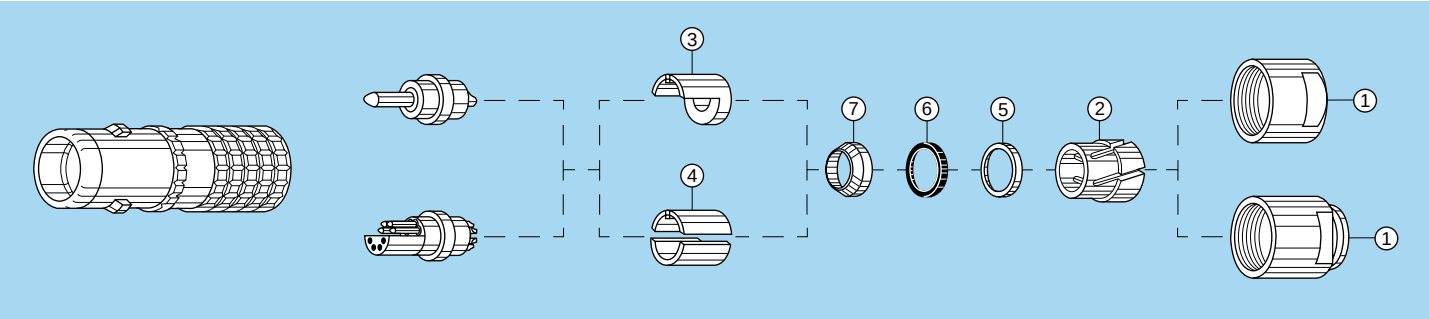

The clamping system for 6E series connectors has been slightly modified as far as its dimensions are concerned. It includes a long collet ②, an earthing collet ⑨, a counter-cone ⑧, a flexible gasket ⑥ and a metal washer ⑤ which prevents the gasket from rotating during the clamping. When mating the assembly, the earthing collet is positioned onto the outer jacket. The cable screen is folded back around the collet extremity and then soldered. The collet is closed with the help of the counter-cone which is pressed against the collet when tightening the collet nut ①. For assembling unscreened cables, the collet ⑨ nut is not used.

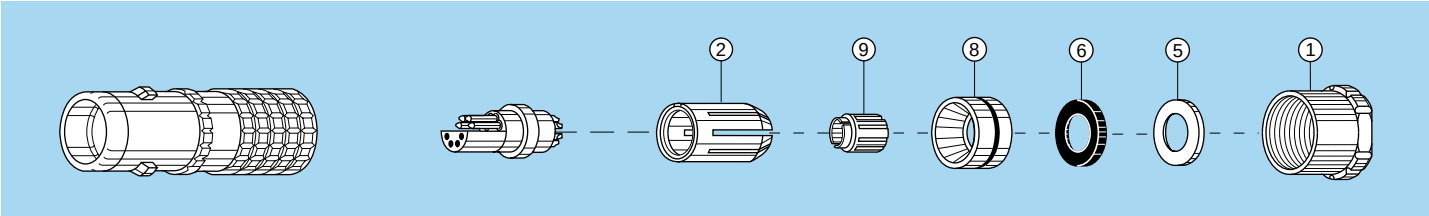

Type D cable clamping (FFL model 2S series)

This clamping system is assembled onto FFL plugs designed for crimp contacts. It includes the same components as the B series, see page 207.

Type L cable clamping (S and 2C series)

This clamping system which includes in one part ② the centre-piece and the collet, does not make it possible to connect the cable shield to the connector shell. It is delivered only upon request and can only be assembled onto unipole or multipole type connectors. This is the only possible clamping type for the 5S.112 type.

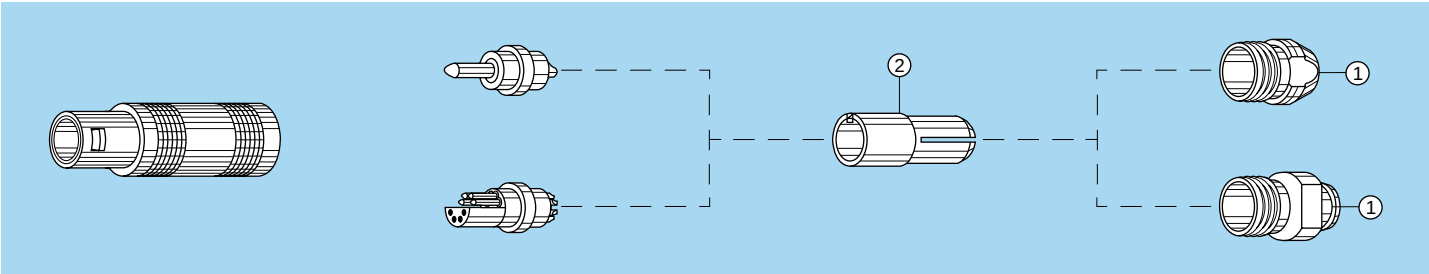

Type K cable clamping (S and E series)

This clamping system provides for screened or unscreened cables with diameters larger than maximum specified for each series. It includes an oversize collet housing ⑩, the collet ② and the collet nut ① of the next series size up. It requires a longer split centre-piece ④.

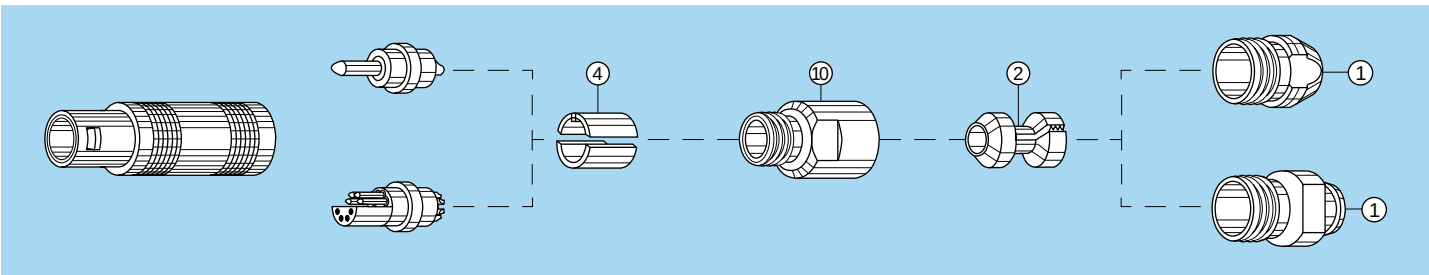

In standard watertight series (E series), the K type clamping type is completed by the flexible gasket ⑥ providing for watertightness on the cable end, by the metal washer ⑤ which prevents the gasket from rotating during the clamping ① and the earthing cone ⑦ of the next series size up which clamps the shield onto the longer split centre-pieces ④.

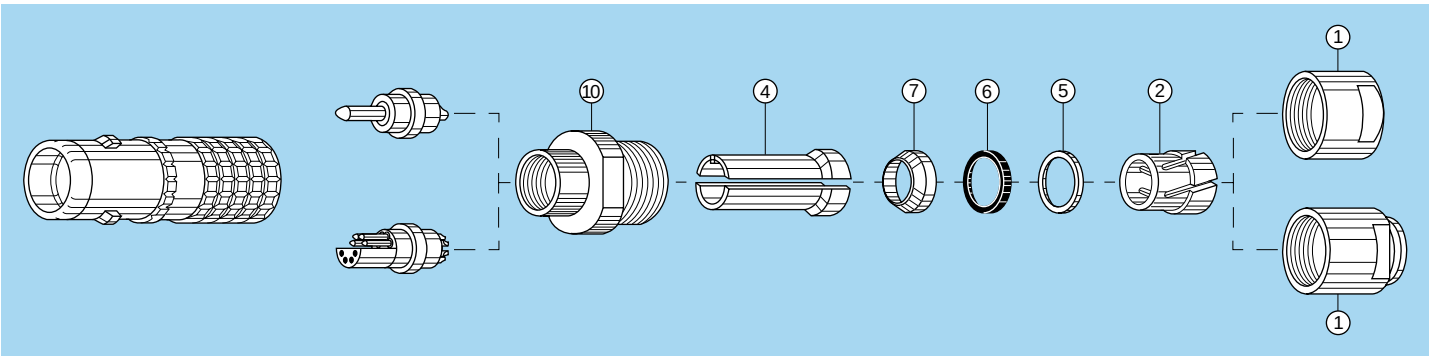

Type E cable clamping (00 unipole series)

This clamping type is specified only for the unipole 00 series. The rear end of the crimp backnut ④ which receives the shield braid is knurled to ensure a good retention of the shield once crimped under the crimp ferrule ①.

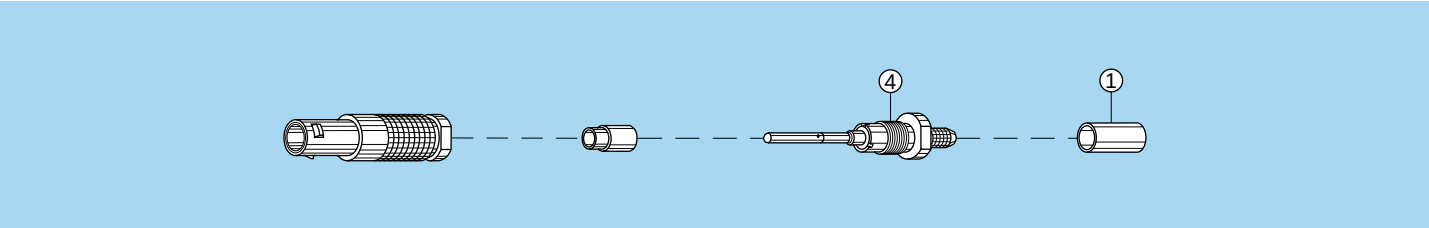

Type D cable clamping (B, 2G and 1D series)

This clamping system includes two split insert carrier ④ which position the insulator into the connector and a collet ② which is compressed by the collet nut ① ensuring the cable clamping. When assembling the connector, the cable shield is clamped between the split insert carrier and the collet.

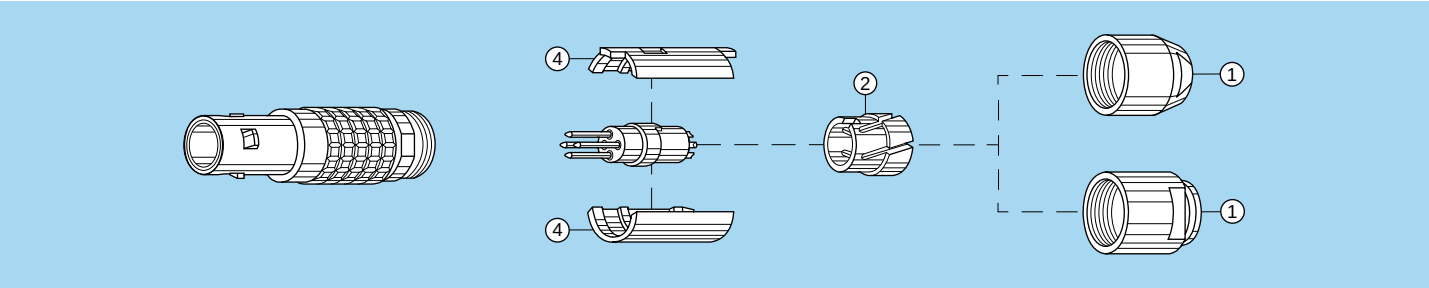

Type M cable clamping (B series)

This clamping system is adapted to cables with a diameter smaller than the smallest diameter specified for each series. It includes a reducer ⑫, a collet of a smaller series ② and a reducing cone ⑪.
These parts have the same function as the D type collet.

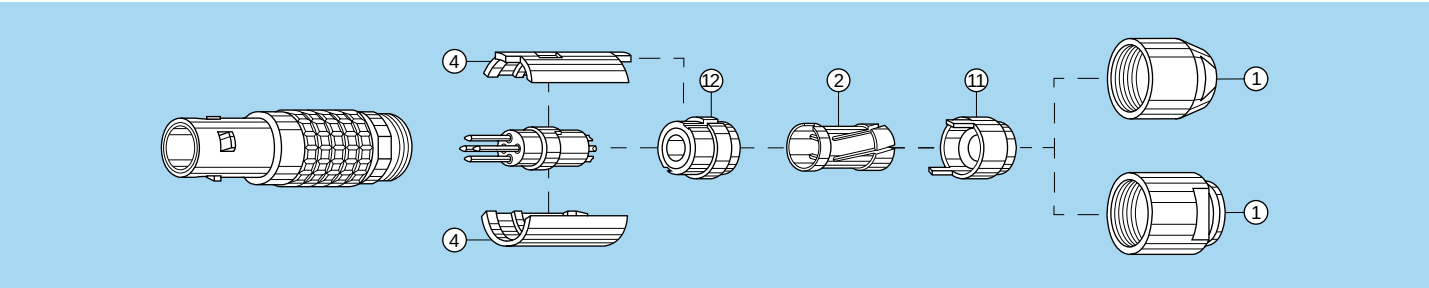

Type C cable clamping (K series)

In the watertight series (K series), the C type clamping system is completed by a flexible gasket ⑥ providing for watertightness on the cable end, by a metal washer ⑤ preventing the gasket from rotating when the collet nut is clamped and an earthing cone ⑦ which clamps the shield onto the split insert carrier ④.

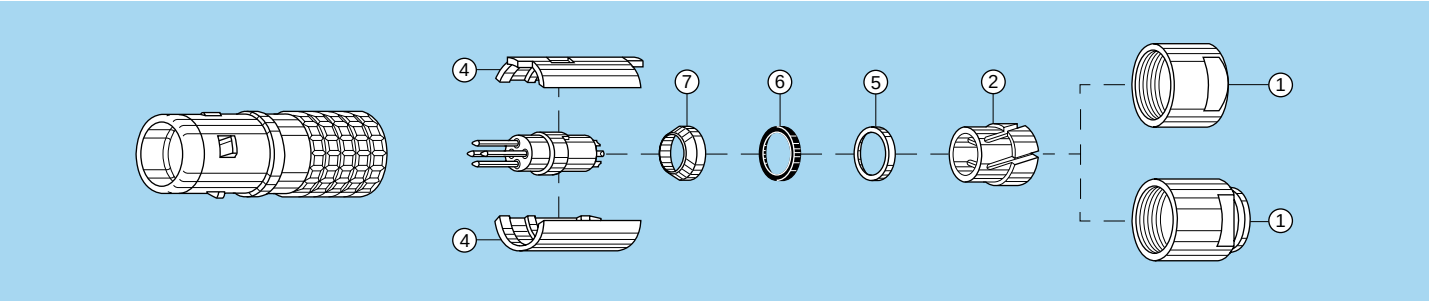

Type K cable clamping (K series)

In the watertight keyed series (K series), the clamping system provides for using screened or unscreened cables, with a diameter larger than the maximum specified for each series. The shell is completed by an oversize collet housing ⑩. The collet ② and watertightness on the cable end are identical to type C cable clamping but are of the next series size up. The earthing cone ⑦ clamps the shield onto the longer split centre-pieces ④.

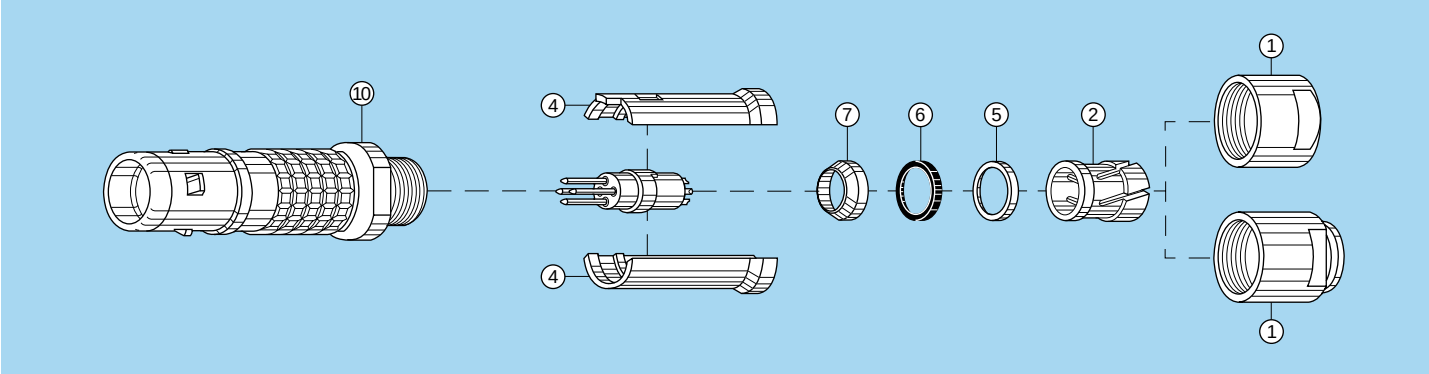

Maximum metal collet nut tightening torque

Standard series

	Series									
	00	0S	1D	1S	2C	2S	3S	4S	5S	6S
Torque (Nm)	0.25	0.5	1.5	1.5	2.5	2.5	6	8	10	12

Watertight series

	Series						
	0E	1E	2E	3E	4E	5E	6E
Torque (Nm)	0.7	0.8	2	3	5	8	12

Keyed series

	Series							
	00	0B	1B	2B	2G	3B	4B	5B
Torque (Nm)	0.25	0.5	1.5	2.5	2.5	4	7	10

Watertight keyed series

	Series					
	0K	1K	2K	3K	4K	5K
Torque (Nm)	0.7	0.8	2	3	5	8

1N = 0.102 kg

Maximum plastic collet nut tightening torque [1)]

	Series								
	00	0S	1S	2S	3S	1B	2B	3B	4B
Torque (Nm)	0.15	0.45	0.50	0.50	1.00	0.50	0.50	1.00	1.50

Note:
1) for applications subject to strong vibration, we recommend fixing the collet nut with epoxy resin.

Technical tables

Table of American Wire Gauge

AWG	Construction		ø wire max		Wire section	
	Strand nb	AWG/ strand	(mm)	(in)	(mm^2)	(sq in)
4	133	25	6.9596	0.274	21.5925	0.0335
6	133	27	5.5118	0.217	13.5885	0.0211
8	168	30	4.4450	0.175	8.5127	0.0132
8	133	29	4.3942	0.173	8.6053	0.0133
10	105	30	3.3020	0.13	5.3204	0.0082
10	37	26	2.9210	0.115	4.7397	0.0073
10	1	10	2.6162	0.103	5.2614	0.0082
12	65	30	2.5146	0.099	3.2936	0.0051
12	37	28	2.3114	0.091	2.9765	0.0046
12	19	25	2.3622	0.093	3.0847	0.0048
12 1)	7	20	2.5400	0.1	3.6321	0.0056
12	1	12	2.0828	0.082	3.3081	0.0051
14	41	30	2.0574	0.081	2.0775	0.0032
14	19	27	1.8542	0.073	1.9413	0.0030
14 1)	7	22	2.0828	0.082	2.2704	0.0035
14	1	14	1.6510	0.065	2.0820	0.0032
16 1)	65	34	1.5748	0.062	1.3072	0.0020
16	26	30	1.5748	0.062	1.3174	0.0020
16	19	29	1.4986	0.059	1.2293	0.0019
16 1)	7	24	1.5494	0.061	1.4330	0.0022
16	1	16	1.3208	0.052	1.3076	0.0020
18 1)	65	36	1.2700	0.05	0.8234	0.0013
18 1)	42	34	1.2700	0.05	0.8447	0.0013
18	19	30	1.3208	0.052	0.9627	0.0015
18	16	30	1.2954	0.051	0.8107	0.0013
18	7	26	1.2700	0.05	0.8967	0.0014
18	1	18	1.0414	0.041	0.8229	0.0013
20 1)	42	36	1.0160	0.04	0.5320	$8.2x10^{-4}$
20	19	32	1.0414	0.041	0.6162	0.0010
20	10	30	1.0160	0.04	0.5067	$7.9x10^{-4}$
20	7	28	0.9906	0.039	0.5631	$8.7x10^{-4}$
20	1	20	0.8382	0.033	0.5189	$8.0x10^{-4}$
22	19	34	0.8382	0.033	0.3821	$5.9x10^{-4}$
22	7	30	0.7874	0.031	0.3547	$5.5x10^{-4}$
22	1	22	0.6604	0.026	0.3243	$5.0x10^{-4}$
24 1)	42	40	0.6604	0.026	0.2045	$3.2x10^{-4}$
24	19	36	0.6858	0.027	0.2407	$3.7x10^{-4}$
24	7	32	0.6350	0.025	0.2270	$3.5x10^{-4}$
24	1	24	0.5588	0.022	0.2047	$3.2x10^{-4}$
26	19	38	0.5588	0.022	0.1540	$2.4x10^{-4}$
26	7	34	0.5080	0.02	0.1408	$2.2x10^{-4}$
26	1	26	0.4318	0.017	0.1281	$2.0x10^{-4}$
28 1)	19	40	0.4318	0.017	0.0925	$1.4x10^{-4}$
28	7	36	0.4064	0.016	0.0887	$1.4x10^{-4}$
28	1	28	0.3302	0.013	0.0804	$1.2x10^{-4}$
30	7	38	0.3302	0.013	0.0568	$8.8x10^{-5}$
30	1	30	0.2794	0.011	0.0507	$7.9x10^{-5}$
32	7	40	0.2794	0.011	0.0341	$5.3x10^{-5}$
32	1	32	0.2286	0.009	0.0324	$5.0x10^{-5}$
34	1	34	0.1693	0.007	0.0201	$3.1x10^{-5}$
36	1	36	0.127	0.005	0.0127	$2.0x10^{-5}$
38	1	38	0.1016	0.004	0.0081	$1.3x10^{-5}$
40	1	40	0.078	0.003	0.0049	$7.5x10^{-6}$

Note: 1) not included in the standard

Table of wire gauges according to IEC-228 standard

Conductor no x Ø (mm)	Max Ø (mm)	Max Ø (in)	Section (mm^2)	Section (sq in)
196x0.40	7.50	0.295	25.00	0.0387
7x2.14	6.10	0.240	25.00	0.0387
125x0.40	6.00	0.236	16.00	0.0248
7x1.72	4.90	0.192	16.00	0.0248
1x4.50	4.50	0.177	16.00	0.0248
80x0.40	4.70	0.155	10.00	0.0155
7x1.38	3.95	0.155	10.00	0.0155
1x3.60	3.60	0.141	10.00	0.0155
84x0.30	3.70	0.145	6.00	0.0093
7x1.50	3.15	0.124	6.00	0.0093
1x2.76	2.76	0.108	6.00	0.0093
56x0.30	2.80	0.110	4.00	0.0062
7x0.86	2.58	0.098	4.00	0.0062
1x2.25	2.25	0.082	4.00	0.0062
50x0.25	2.15	0.084	2.50	0.0038
7x0.68	2.04	0.080	2.50	0.0038
1x1.78	1.78	0.070	2.50	0.0038
30x0.25	1.60	0.062	1.50	0.0023
7x0.52	1.56	0.061	1.50	0.0023
1x1.14	1.40	0.055	1.50	0.0023
32x0.20	1.35	0.053	1.00	0.0015
7x0.43	1.29	0.050	1.00	0.0015
1x1.15	1.15	0.045	1.00	0.0015
42x0.15	1.20	0.047	0.75	0.0011
28x0.20	1.15	0.045	0.75	0.0011
1x1.0	1.00	0.039	0.75	0.0011
28x0.15	0.95	0.037	0.50	$7.7x10^{-4}$
16x0.20	0.90	0.035	0.50	$7.7x10^{-4}$
1x0.80	0.80	0.031	0.50	$7.7x10^{-4}$
7x0.25	0.75	0.029	0.34	$5.2x10^{-4}$
1x0.60	0.60	0.023	0.28	$4.3x10^{-4}$
14x0.15	0.75	0.029	0.25	$3.8x10^{-4}$
7x0.20	0.65	0.023	0.22	$3.4x10^{-4}$
18x0.10	0.50	0.019	0.14	$2.1x10^{-4}$
14x0.10	0.40	0.015	0.11	$1.7x10^{-4}$
21x0.07	0.40	0.015	0.09	$1.3x10^{-4}$
14x0.10	0.40	0.015	0.09	$1.3x10^{-4}$

Maximum current rating for conductor

Maximum current on insulated conductors up to an ambiant temperature of 30° C (from VDE 0100, parts 430 and 532 as well as other VDE regulations).

Nominal section mm^2	Group 2 Intens. max. A	Group 3 Intens. max. A
0.08	1.0	1.5
0.14	2.0	3.0
0.25	4.0	5.0
0.34	6.0	8.0
0.50	9.0	12.0
0.75	12.0	15.0
1.00	15.0	19.0
1.50	18.0	24.0
2.50	26.0	32.0

Group 2 Multi-conductor, e. g. solid cable under sheath, shielded cable, lead-sheath cables, …
Group 3 Single conductor and single conductor cable laid on open air in a way to leave at least a space between them equal to their diameter

Some formulae

Resistance R of a conductor: $R = \rho \bullet \frac{l}{A}\ [\Omega]$

Where: ρ = conductor resistivity
l = conductor length
A = conductor cross-section

Impedance of coaxial line: $Z = \frac{138}{\sqrt{\varepsilon_r}} \bullet \log \frac{D}{d}\ [\Omega]$

ε_r = dielectric constant
D = dielectric outer diameter
d = center conductor outer diameter

Signal attenuation: $\text{Attenuation} = 20 \bullet \log \frac{U_1}{U_2}\ [dB]$

U_1 = input signal voltage
U_2 = output signal voltage

Conversion of some units:

millimeter into inches:	1 mm	= 0.0394 in
inches into millimeter:	1 in	= 25.4 mm
centimeters into feet:	1 cm	= 0.0328 ft
feet (12 in) into centimeters:	1 ft	= 30.48 cm
square centimeters into square inches:	1 cm^2	= 0.155 sq in
square inches into square centimeters:	1 sq in	= 6.4516 cm^2
bar into psi (pounds per square inch):	1 bar	= 14.51 psi
bar into Pascal:	1 bar	= 10^5 Pa
°C into °F:	°F	= °C•1.8 + 32
newtonmeter (Nm) into inch pound (in•lb)	1 Nm	= 8.85 in•lb
mbar•l•s^{-1} into Torr•l•s^{-1}	1 mbar•l•s^{-1}	= 1.33 Torr•l•s^{-1}