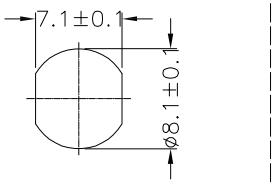

Recommended Panel Cut-Out

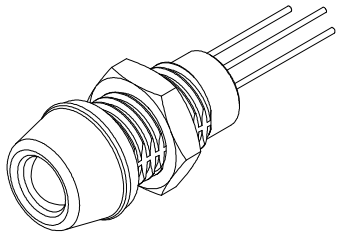

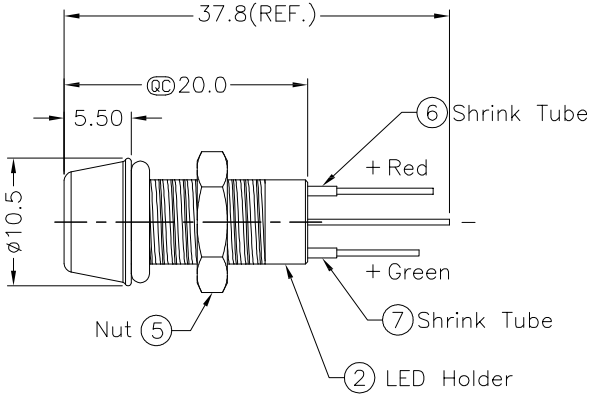

Notes:
QC Important Dimension To Check
Waterproof Rate: IP67
LED Holder:Copper Alloy, Nickel Plating
LED Spec:
ø5mm,Super Bright,Red/Green,Bi-Color LED
Lens Color: Water Clear
Forward Voltage: Red Min.1.6/Max.2.6(V)
Green Min.2.8/Max.3.8(V)
Forward Current: Red Max. 35mA
Green Max. 20mA
Luminous Intensity: Red Min.1000/Max.3000(Mcd)
Green Min.4900/Max.16500(Mcd)
Reverse Voltage: DC 5V
Operating Temperature:-30°C~+80°C
O-Ring: Silicone, Gray
Screw Nut:Copper Alloy, Nickel Plating
For Panel Thickness 6.5 max.

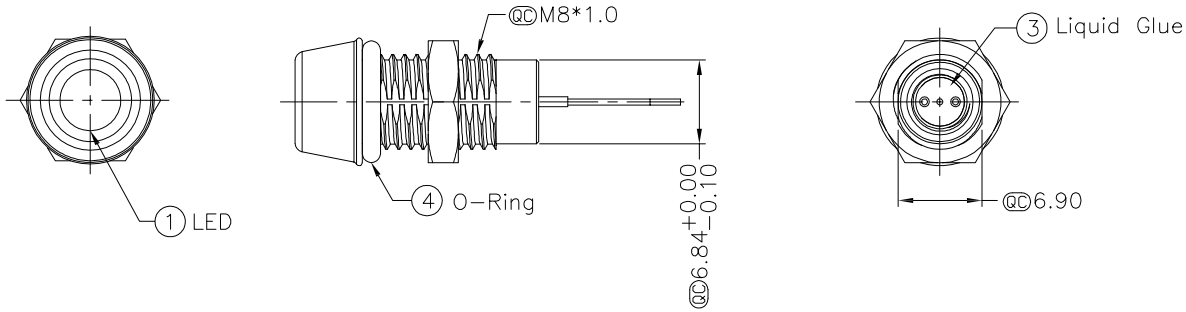

RoHS compliant

Scale	Free					Date	Name	Customer-No.
TOLERANCE					Drawn	11.03.2014	Winnie	
.X	±0.25				Approved	11.03.2014	Winnie	ASSMANN WSW-No. A-LED8-1ABAS-MR7-1
.XX	±0.10							
.XXX	±0.05							Drawing-No. ASS 6224 CO rev00
Angle	±1°							
		0	Drawn	11.03.2014	Winnie			Replace / Sheet
		Id.	Modification	Date	Name			

ASSMANN WSW components