TABLE 1	
CODE NUMBER	**MARKING O-RING**
UQDS-02HSH01-L000	BLUE (FEMALE)
UQDS-02HSH01-R000	RED (FEMALE)

CUSTOMER DRAWING

REVISIONS			
ZONE	REV.	DESCRIPTION	DATE
	PA1	INITIAL RELEASE	2025-01-14
	PA2	NOTE UPDATE	2025-03-10

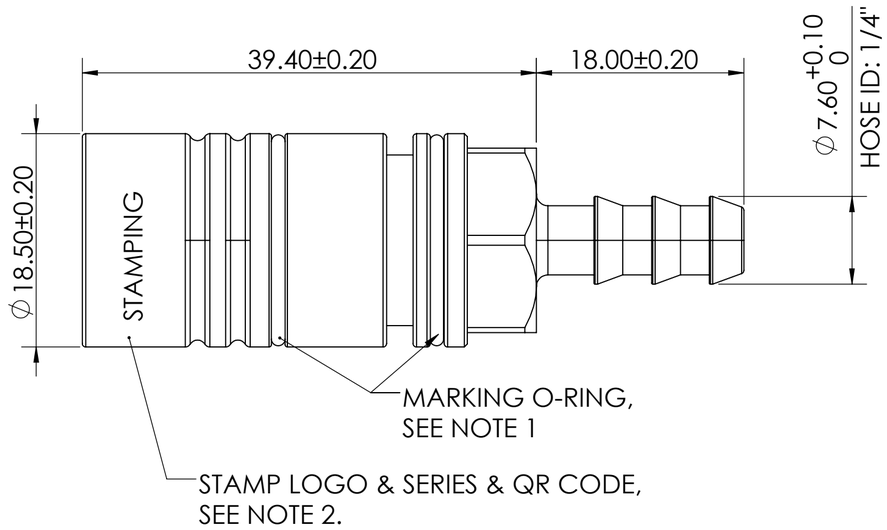

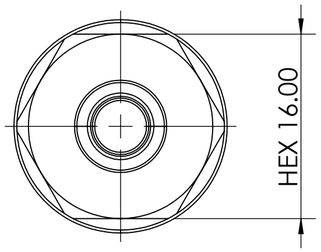

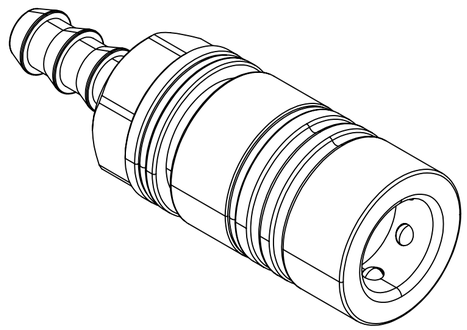

SPECIFICATIONS

Shell Material	Stainless Steel
Sping Material	Corrosion Resistant Stainless Steel
Sealing Material	EPDM
Working Pressure	0~0.6MPa
Safety Pressure	2.0MPa
Operating Temperature	-40~+105°C
Sealing	Dry Break Sealing, No Leakage
Applicable Fluid	Deionized Water, Glycol, Propylene Glycol
Adapted Hose Inner Dia.	∅1/4"

2. STAMP LOGO & SERIES & QR CODE.

STAMP EXAMPLE:

Amphenol UQD02

LOGO & SERIES

READING: UQDS-02HSH01-L000-20250103-00001

CODE NUMBER IN TABLE 1

DATE IN 8 DIGIT, YYYYMMDD

SEQUENTIAL NUMBER, FROM 00001 TO 99999

1. THE COLOR OF MARKING O-RING REFERS TO TABLE 1.

NOTES

THIS DOCUMENT CONTAINS PROPRIETARY INFORMATION AND SUCH INFORMATION MAY NOT BE DISCLOSED TO OTHERS FOR ANY PURPOSE OR USED FOR MANUFACTURING PURPOSES WITHOUT WRITTEN PERMISSION FROM THE AMPHENOL CORP.

Next Assembly

UNLESS OTHERWISE SPECIFIED

LINEAR DIMENSIONS ARE IN MILLIMETERS
TOLERANCES:

DIM. RANGE	0.5-3	>3-6	>6-30	>30-120	>120-400
TOLERANCE	±0.1	±0.1	±0.2	±0.3	±0.5

ANGLES = ±2°
DIM. & TOL. PER ASME Y14.5M-1994;
DRM PER MIL-DTL-31000;
OTHER AMPHENOL STANDARDS: 9-9318

THIRD ANGLE PROJECTION

APPROVALS		DATE
PREPARED BY:	Michael Zeng	2025-03-10
LEAD/PRODUCT ENGINEER:	Jerry Pu	
ENGINEERING MANAGER:	Ran Xiao	
PRODUCT GROUP:	C&I	
AIPG DIVISION:	AIO	

MATERIAL SPEC	PROCESS SPEC
N/A	N/A

AMPHENOL CORPORATION
Amphenol Technology (Zhuhai) Co. Ltd.
No. 63 Xinghan Road, Sanzao Town, Jinwan, Zhuhai, PRC

U

UQD02 SKT HS 1/4"

SIZE	CAGE CODE	DOCUMENT NUMBER	REV
C	90MJ5	UQDS-02HSH01-000	**PA2**

SCALE: 2.5:1 | REF: | SHEET 1 OF 1