| TABLE 1 | |
|---|---|
| **CODE NUMBER** | **MARKING O-RING** |
| UQDLS-02HSH01-L000 | BLUE (FEMALE) |
| UQDLS-02HSH01-R000 | RED (FEMALE) |

# CUSTOMER DRAWING

| REVISIONS | | | |
|---|---|---|---|
| ZONE | REV. | DESCRIPTION | DATE |
| | PA1 | INITIAL RELEASE | 2025-01-16 |
| | PA2 | NOTE UPDATE | 2025-03-10 |

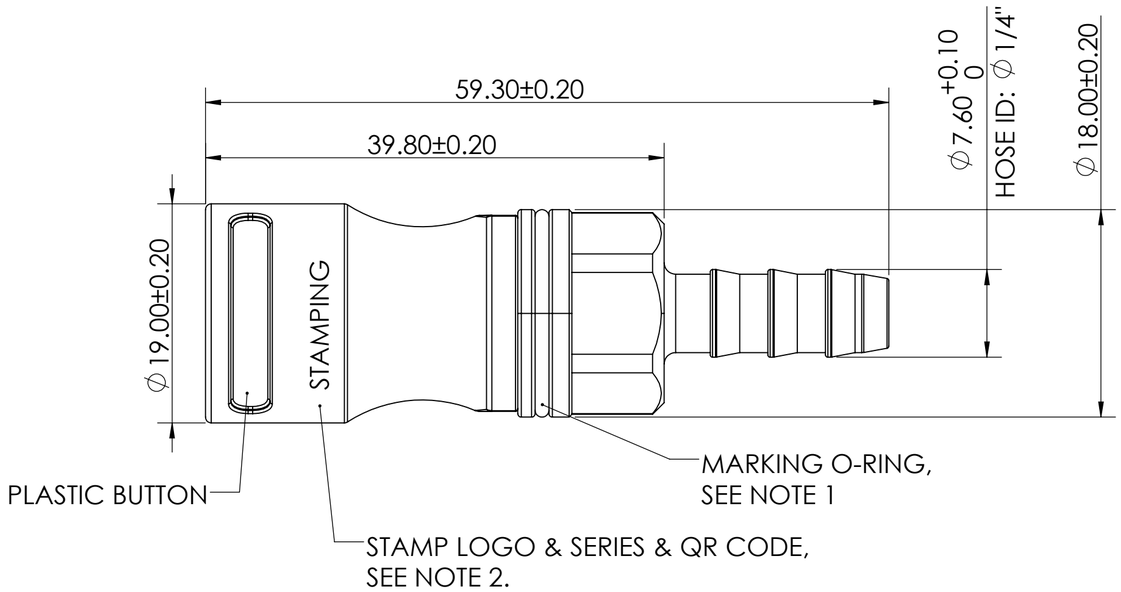


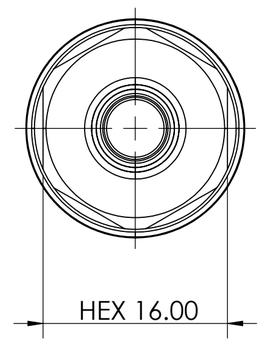


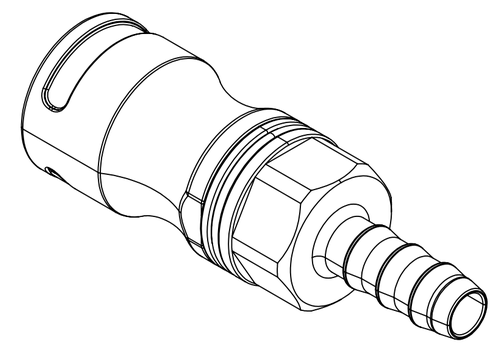

## SPECIFICATIONS

| | |
|---|---|
| Shell Material | Stainless Steel |
| Sping Material | Corrosion Resistant Stainless Steel |
| Sealing Material | EPDM |
| Working Pressure | 0~0.6MPa |
| Safety Pressure | 2.0MPa |
| Operating Temperature | -40~+105˚C |
| Sealing | Dry Break Sealing, No Leakage |
| Applicable Fluid | Deionized Water, Glycol, Propylene Glycol |
| Adapted Hose Inner Dia. | ⌀1/4" |

3. COLOR OF PLASTIC BUTTON: RAL 9016.

2. STAMP LOGO & SERIES & QR CODE.

STAMP EXAMPLE:

Amphenol UQD02

LOGO & SERIES

READING: UQDLS-02HSH01-L000-20250103-00001

CODE NUMBER IN TABLE 1

DATE IN 8 DIGIT, YYYYMMDD

SEQUENTIAL NUMBER, FROM 00001 TO 99999

1. THE COLOR OF MARKING O-RING REFERS TO TABLE 1.

**NOTES**

THIS DOCUMENT CONTAINS PROPRIETARY INFORMATION AND SUCH INFORMATION MAY NOT BE DISCLOSED TO OTHERS FOR ANY PURPOSE OR USED FOR MANUFACTURING PURPOSES WITHOUT WRITTEN PERMISSION FROM THE AMPHENOL CORP.

Next Assembly

UNLESS OTHERWISE SPECIFIED

LINEAR DIMENSIONS ARE IN MILLIMETERS
TOLERANCES:

| DIM. RANGE | 0.5-3 | >3-6 | >6-30 | >30-120 | >120-400 |
|---|---|---|---|---|---|
| TOLERANCE | ±0.1 | ±0.1 | ±0.2 | ±0.3 | ±0.5 |

ANGLES = ±2˚
DIM. & TOL. PER ASME Y14.5M-1994;
DRM PER MIL-DTL-31000;
OTHER AMPHENOL STANDARDS: 9-9318

THIRD ANGLE PROJECTION

| APPROVALS | | DATE |
|---|---|---|
| PREPARED BY: | Michael Zeng | 2025-03-10 |
| LEAD/PRODUCT ENGINEER: | Jerry Pu | |
| ENGINEERING MANAGER: | Ran Xiao | |
| PRODUCT GROUP: | C&I | |
| AIPG DIVISION: | AIO | |

| MATERIAL SPEC | PROCESS SPEC |
|---|---|
| N/A | N/A |

**AMPHENOL CORPORATION**
Amphenol Technology (Zhuhai) Co. Ltd.
No. 63 Xinghan Road, Sanzao Town, Jinwan, Zhuhai, PRC

U

UQD02 SKT L,HS 1/4"

| SIZE | CAGE CODE | DOCUMENT NUMBER | REV |
|---|---|---|---|
| C | 90MJ5 | UQDLS-02HSH01-000 | **PA2** |

SCALE: 2.5:1 | REF: | SHEET 1 OF 1