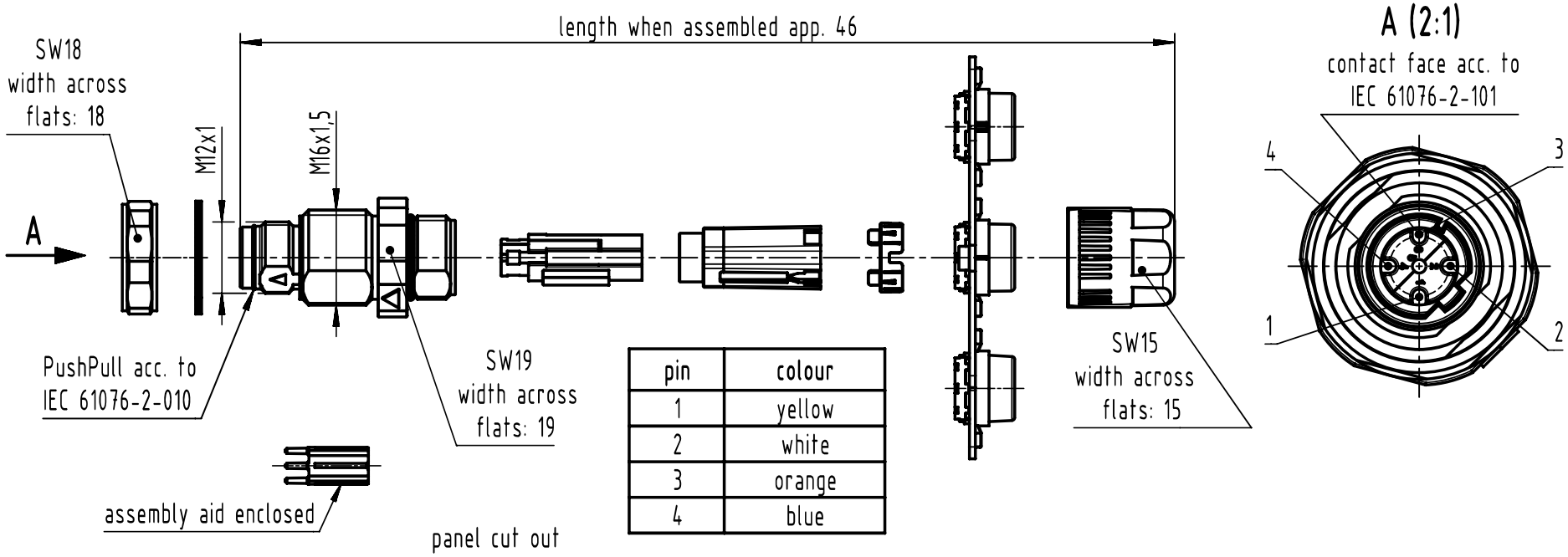

pin	colour
1	yellow
2	white
3	orange
4	blue

panel cut out

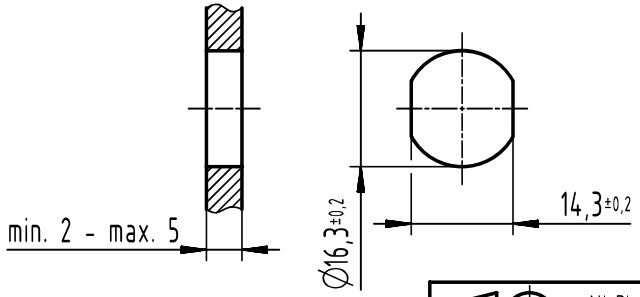

recommended torque of counter nut: 2Nm
order contacts separately

cable Ø	wire gauge	contact part-no.
4,5-8,8mm	AWG 26-22	09 67 000 5576
	AWG 24-20	09 67 000 8576
	AWG 22-18	09 67 000 3576

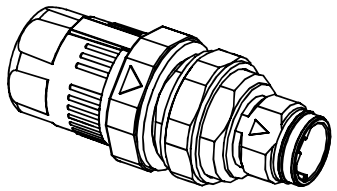

All Dimensions in mm
Original Size DIN A4

Scale 1:1 | Free size tol. | Ref. | Sub.

All rights reserved

Department EL PD

Created by	Inspected by	Standardisation	Date	State
408279	farcasiu		04-Jun-2025	40 - Released

Title M12-SD-CC-CRIMP-4P-DCOD-M-STR-SHLD

Doc-Key / ECM-Nr. DS00204853

HARTING
D-32339 Espelkamp

Type	Design Number	SAP Mat. Number	Rev.	Page
TB	DS00204853	21038811436	H	1/1

A4