P1: M-042
P2: M-048A

Customer No.: NO.1

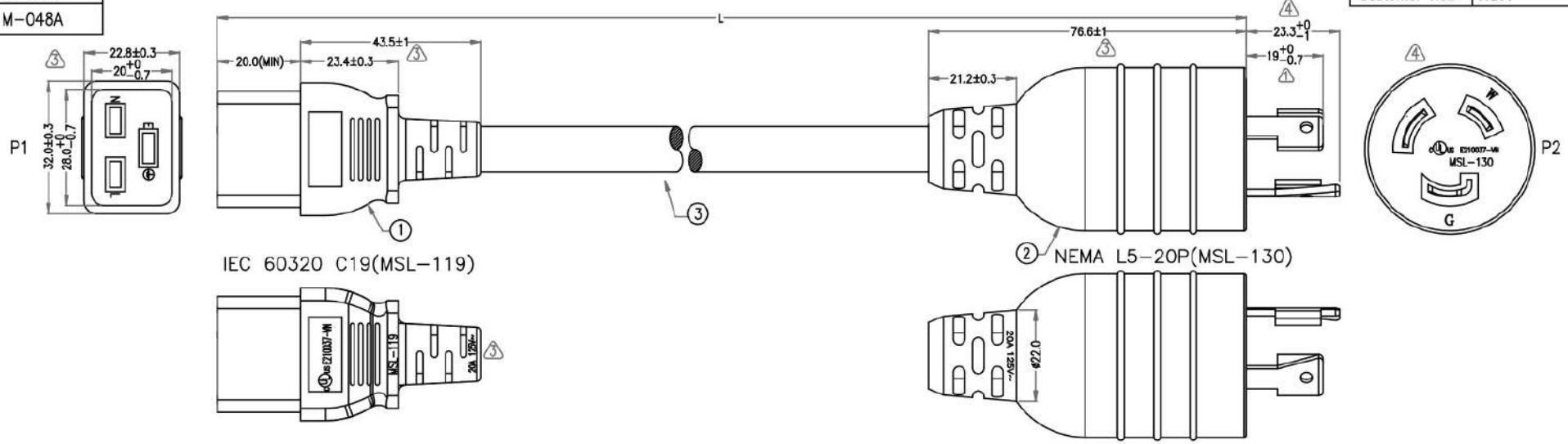

P1.P2: c UL us E210037-VN

NOTE: All relevant materials are complied with RoHS directive .
THE CABLE MARKING IS CONCAVE LETTERING MOULD

PACKING A: ≤1FT

PACKING B: ≤2FT

PACKING C: >2FT

2 3 MARKING: (UL) SJT 3/C 12AWG(3.31MM^2) VW-1 105°C 300V E204978
C(UL) SJT 3/C 3.31MM^2(12AWG) FT2 105°C 300V E204978 MSL-VN-

119130B2F12A(FP253-00)

	P1		P2
BLACK	L	———	
WHITE	N	———	W
GREEN	E	———	G

No.	DESCRIPTION		Q'TY	Supplier
3	UL SJT 12AWG x 3C, OD 11.0mm, JACKET BLACK, DRAWING No. EPSJT011203C-158	H5TC41-0304K09	L-20mm	M304
2	MOLDED PVC 35P, COLOR BLACK	H1BC02-0304K09		M304
	BRACKET: L5-20 (94V-0) MSL-130	A1QC63-0767K09	1	M767
	TERMINAL: 97656BL-0 (W)	A1QB39-0257	1	M257
	TERMINAL: 97655BL-0 (G)	A1QB41-0257	1	M257
	TERMINAL: 97654BL-0	A1QB40-0257	1	M257
1	MOLDED PVC 35P, COLOR BLACK	H1BC02-0304K09		M304
	BRACKET: YST-037	A1QC36-0767K09	1	M767
	TERMINAL: 98739ABS-0	A1QB33-0257	3	M257

4 REV.4 2024.12.03	MODIFY P2 MODEL AND SIZE		
2 REV.2 2022.02.23	MODIFY MARKING	3 REV.3 2023.08.21	MODIFY PLUG SIZE & LOGO MODIFY MARKING
1 REV.1 2018.01.16	MODIFY P2 PLUG TERMINAL SURFACE & SIZE		

NOTE: Cable Length Unless Otherwise Spec. Tolerances: Under 6FT ±25mm; Another ±50mm

APPROVED		CompuCableUSA	Cable Length Unless Other Spec. Tolerances: 0 ~200mm ±10mm; 201~1000mm ±20mm; 1001 ~1500mm ±25mm; 1501~2100mm ±30mm; 2100mm↑ ±40mm
CHECKED	HU		
DESINGER	XJW		
DRAWING	PLS		
DATE	03/DEC/24	ITEM NO. AC-L52019-XX	UNIT:mm