P1: M-042
P2: M-099A

Customer No:	No:1

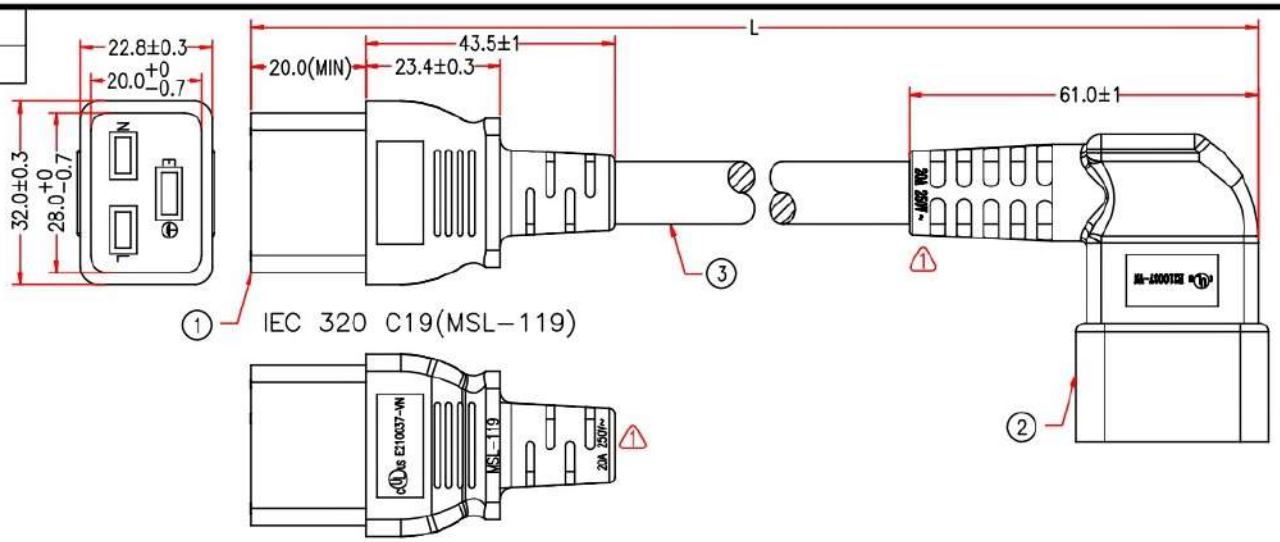

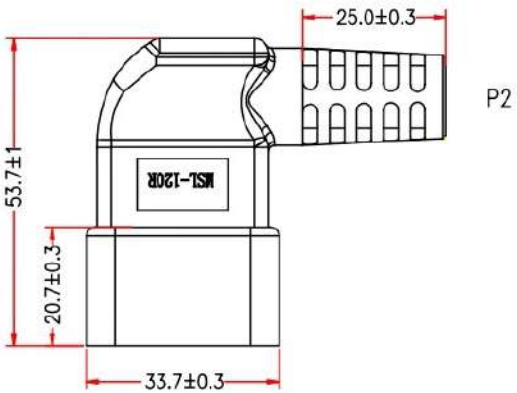

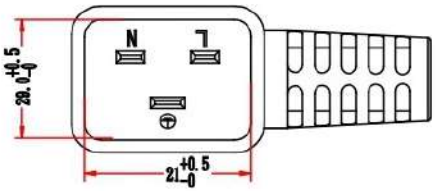

PACKING:

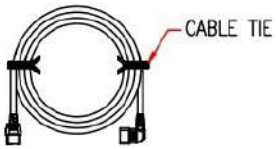

P/N	L(mm)
AC-1920R-03	915mm
AC-1920R-06	1830mm
AC-1920R-10	3050mm

P1;P2: cULus E210037-VN

NOTE: All relevant materials are complied with RoHS directive .

THE MARKING IS PROTRUDING LETTERING MOULD:

(UL) SJT 3/C 12AWG(3.31MM^2) VW-1 105°C 300V E204978

C(UL) SJT 3/C 3.31MM^2(12AWG) FT2 105°C 300V E204978 MSL-VN-

119167B2F12A(FP453-00)

	P1		P2
BLACK	L	———	L
WHITE	N	———	N
GREEN	E	———	E

No.	DESCRIPTION		Q'TY	Supplier
3	UL SJT 12AWG x 3C, OD 11.0mm, JACKET BLACK, DRAWING No. EPSJT011203C-158	H5TC41-0304K09	L-20mm	M304
2	MOLDED PVC 35P, COLOR BLACK	H1BC02-0304K09		M304
	BRACKET: YST-105, COLOR BLACK	A1QC92-0767K09	1	M767
	TERMINAL: 97607BS-1	A1QB35-0257	1	M257
	TERMINAL: 97606BS-1	A1QB34-0257	2	M257
1	MOLDED PVC 35P, COLOR BLACK	H1BC02-0304K09		M304
	BRACKET: YST-037, COLOR BLACK	A1QC36-0767K09	1	M767
	TERMINAL: 98739ABS-0	A1QB33-0257	3	M257

APPROVED		CompuCableUSA	Cable Length Unless Other Spec. Tolerances: 0 ~200mm ±10mm; 201~1000mm ±20mm; 1001 ~1500mm ±25mm; 1501~2100mm ±30mm; 2100mm↑ ±40mm
CHECKED	HU		
DESIGNER	XJW		
DRAWING	MuMu		
DATE	06/JUN/23	ITEM NO. AC-1920R-XX	UNIT:mm

REV.1 2023.06.06	MODIFY P1&P2 PLUG LOGO	CHECKED