P1: M-004
P2: M-044

Customer No.: No.1

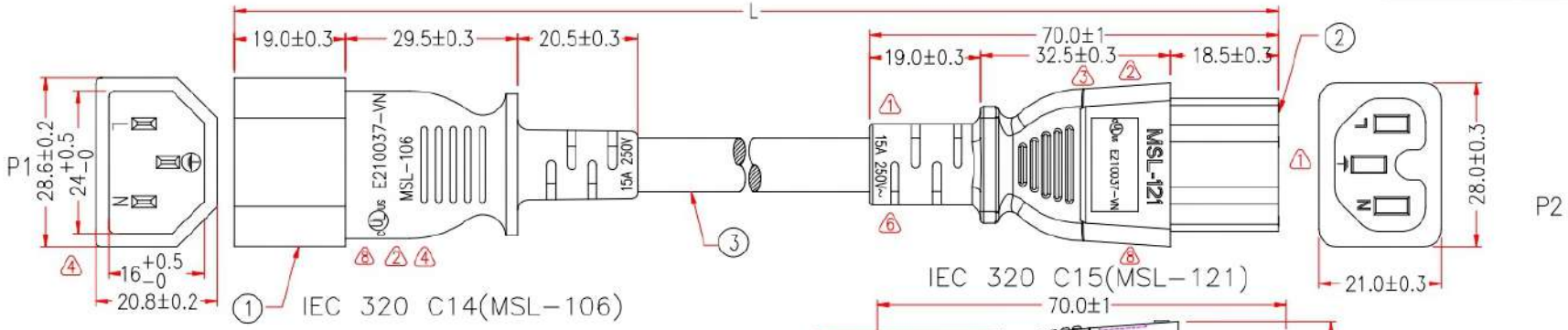

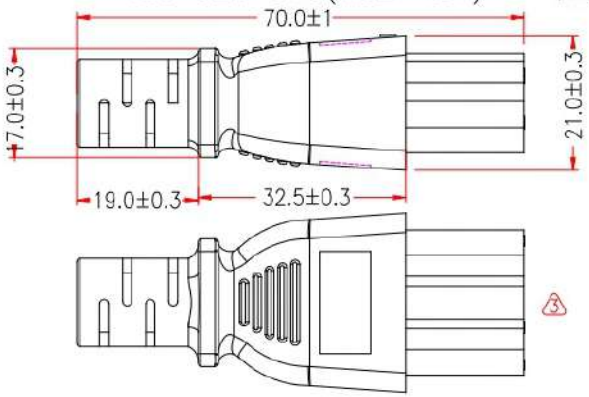

PACKING:

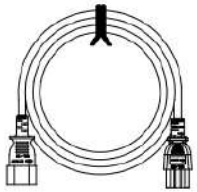

MARKING:

(UL) SJT 3/C 14AWG(2.08MM²) VW-1 105°C 300V E204978

C(UL) SJT 3/C 2.08MM²(14AWG) FT2 105°C 300V E204978 MSL-VN-

P1,P2: E210037-VN

*NOTE: All relevant materials are complied with RoHS directive .
THE CABLE MARKING IS CONCAVE LETTERING MOULD

106121B2F14A(FP218-00)

P1	P2	
L	L	BLACK
N	N	WHITE
E	E	GREEN

No.	DESCRIPTION		Q'TY	Supplier
3	UL SJT 14AWG x 3C, OD 9.3mm, JACKET LIST, DRAWING No. EPSVT011403C-147	H5TC21-0304	L-40mm	M304
2	MOLDED PVC 35P, JACKET LIST	H1BC02-0304		M304
	BRACKET:9745C, JACKET LIST	A1QC42-0767	1	M767
	TERMINAL:98745L	A1QB43-0257	3	M257
1	MOLDED PVC 35P, JACKET LIST	H1BC02-0304		M304
	BRACKET: YS-014, JACKET LIST	A1QC10-0767	1	M767
	TERMINAL: 2x4mm 98672BS-1	A1QB07-0257	3	M257

PAGE: 1 OF 2

REV.10 2025.06.16	ADD GUEST NUMBER	REV.11 2025.06.25	ADD ITEM
REV.9 2023.10.11	ADD COLOR	REV.10 2025.6.16	MODIFY ITEM LIST
REV.7 2023.07.19	MODIFY CABLE LETTERING CONTENT	REV.8 2023.10.07	MODIFY PRINTING
REV.5 2021.12.13	MODIFY CABLE LETTERING CONTENT	REV.6 2023.06.30	MODIFY MODEL LOGO
REV.3 2015.11.03	MODIFY P2 MODEL LOGO	REV.4 2017.09.04	MODIFY MODEL LOGO & CABLE
REV.1 2013.06.17	MODIFY P2 MODEL LOGO	REV.2 2015.02.04	MODIFY MODEL LOGO

NOTE: Cable Length Unless Otherwise Spec. Tolerances: Under 6FT ±25mm; Another ±50mm

APPROVED		CompuCableUSA	Cable Length Unless Other Spec. Tolerances:
CHECKED	HU		0 ~200mm ±10mm
DESIGNER	LM		201~1000mm ±20mm
DRAWING	PLS		1001 ~1500mm ±25mm
			1501~2100mm ±30mm
			2100mm↑ ±40mm
DATE	25/JUN/25	ITEM NO. AC-C1514-XX-XX & AC-1514-XX-XX	UNIT:mm

Customer No.:	No.1

JACKET & MOLDED & BRACKET COLOR	P/N.	LENGTH(Lmm)
BLUE(PT286C) GREEN(PT376C) RED(PT201C) YELLOW(PT123C)	AC-1514-02-XX	610mm
	AC-1514-03-XX	915mm
	AC-1514-04-XX	1220mm
	AC-1514-05-XX	1524mm
	AC-1514-06-XX	1830mm
	AC-1514-07-BU	2134mm
	AC-1514-08-XX	2440mm
	AC-1514-10-XX	3048mm
	AC-1514-15-BU	4570mm

JACKET & MOLDED & BRACKET COLOR	P/N.	LENGTH(Lmm)
BLACK	AC- C1514-XX-XX	XXXmm

REV.10 2025.06.16	ADD GUEST NUMBER	REV.11 2025.06.25	ADD ITEM
REV.9 2023.10.11	ADD COLOR	REV.10 2025.6.16	MODIFY ITEM LIST
REV.7 2023.07.19	MODIFY CABLE LETTERING CONTENT	REV.8 2023.10.07	MODIFY PRINTING
REV.5 2021.12.13	MODIFY CABLE LETTERING CONTENT	REV.6 2023.06.30	MODIFY MODEL LOGO
REV.3 2015.11.03	MODIFY P2 MODEL LOGO	REV.4 2017.09.04	MODIFY MODEL LOGO & CABLE
REV.1 2013.06.17	MODIFY P2 MODEL LOGO	REV.2 2015.02.04	MODIFY MODEL LOGO

NOTE: Cable Length Unless Otherwise Spec. Tolerances: Under 6FT ±25mm; Another ±50mm

APPROVED		CompuCableUSA	Cable Length Unless Other Spec. Tolerances:
CHECKED	HU		0 ~200mm ±10mm
DESIGNER	LM		201~1000mm ±20mm
DRAWING	PLS		1001 ~1500mm ±25mm
			1501~2100mm ±30mm
			2100mm↑ ±40mm
DATE	25/JUN/25	ITEM NO. AC-C1514-XX-XX & AC-1514-XX-XX	UNIT:mm