| | |
|---|---|
| P1: M-084A ② | Customer No.: |
| P2: M-006 | No.: |

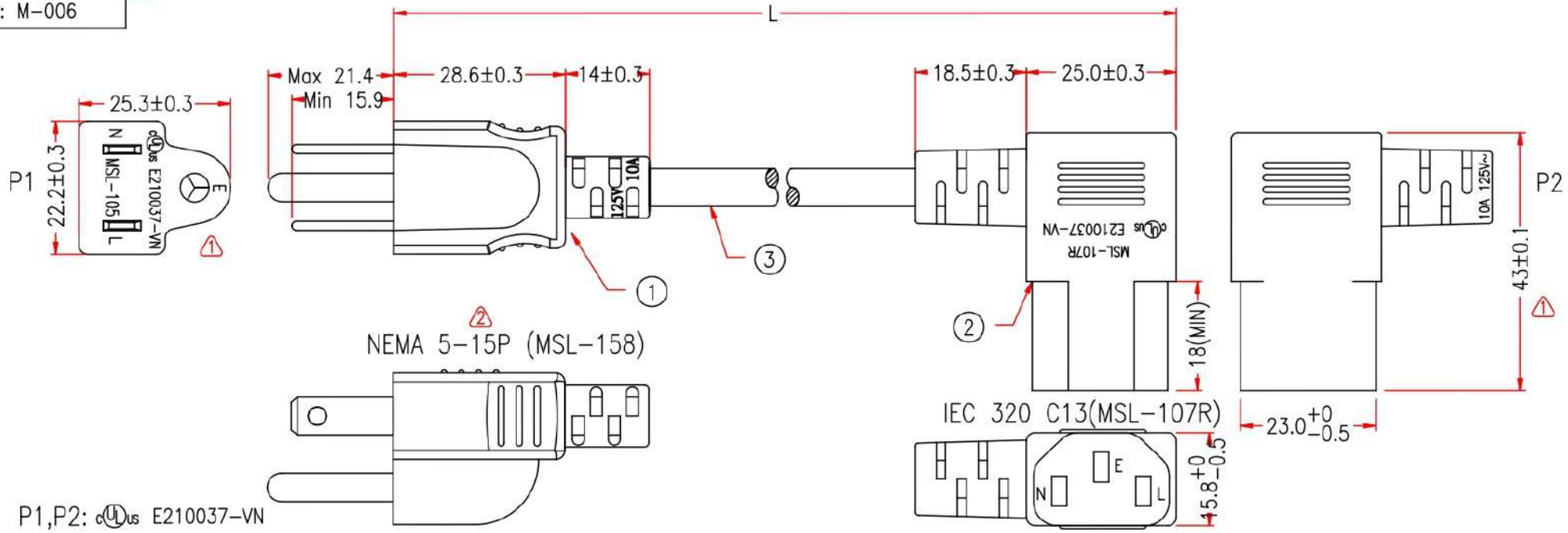


PACKING A:≤3M(10FT) PACKING B:>3M(10FT)

MARKING:

(UL) SVT 3/C 18AWG(0.824MM²) VW-1 75°C 300V E204978 C(UL) SVT 3/C 0.824MM²(18AWG) FT2 60°C 300V E204978 MSL-VN-

109158B1F18A(FP415-00)

| | P1 | | P2 |
|---|---|---|---|
| BLACK | L | ——— | L |
| WHITE | N | ——— | N |
| GREEN | E | ——— | E |

* NOTE: All relevant materials are complied with RoHS directive .
THE MARKING IS CONCAVE LETTERING MOULD

| No. | DESCRIPTION | | Q'TY | Supplier |
|---|---|---|---|---|
| 3 | UL SVT 18AWG*3C, OD 6.3mm, JACKET BLACK, DRAWING No.EPSVT011803C-099 | H5TB10-0304K09 | Lmm | M304 |
| 2 | MOLDED PVC BLACK, 35P | H1BC02-0304K09 | | M304 |
| | BRACKET: YS-003 | A1QC14-0767 | 1 | M767 |
| | TERMINAL: 2*4mm, 98744BS-0/A | A1QB55-0257 | 3 | M257 |
| 1 | MOLDED PVC BLACK, 35P | H1BC02-0304K09 | | M304 |
| ② | TERMINAL WITH BRACKET: LP-31M內彎-9 | A1QC82-1035K09 | 1 | M1035 |

| | | | | |
|---|---|---|---|---|
| APPROVED | | CompuCableUSA | | Cable Length Unless Other Spec. Tolerances: 0 ~200mm ±10mm; 201~1000mm ±20mm; 1001 ~1500mm ±25mm; 1501~2100mm ±30mm; 2100mm↑ ±40mm |
| CHECKED | HU | | | |
| DESIGNER | XJW | | | |
| DRAWING | MuMu | | | |
| DATE | 12/JUL/24 | ITEM NO. | AC-062XX | UNIT:mm |

① 2023.9.25 MODIFY SIZE ② REV.2 2024.07.12 MODIFY P1 PLUG MODEL AND BRACKET SUPPLIER

NOTE: Cable Length Unless Otherwise Spec. Tolerances: Under 6FT ±25mm; Another ±50mm