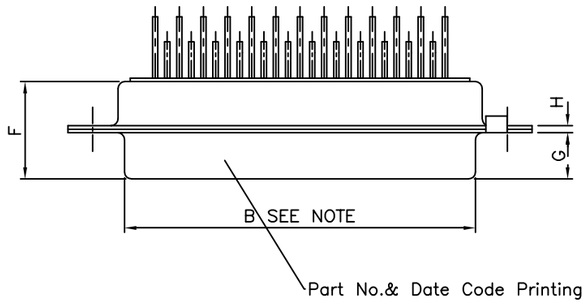

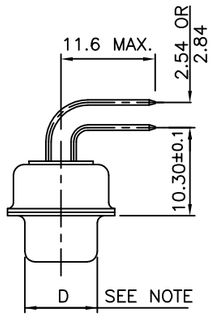

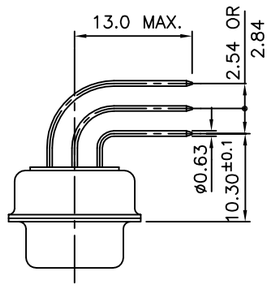

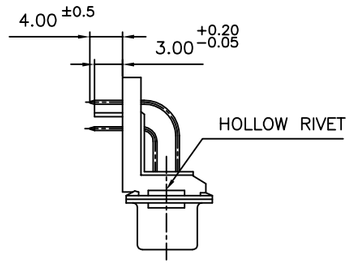

50	P	66.65	52.68	61.11	11.08	14.99	11.09	5.85	1.0
	S	66.65	52.30	61.11	10.62	14.99	11.21	6.05	0.8
37	P	68.94	55.30	63.50	8.23	12.17	11.09	5.85	1.0
	S	68.94	54.71	63.50	7.77	12.17	11.21	6.05	0.8
25	P	52.65	38.84	47.04	8.23	12.17	11.07	5.85	0.8
	S	52.65	38.25	47.04	7.77	12.17	11.21	6.05	0.8
15	P	38.76	25.12	33.32	8.23	12.17	10.99	5.85	0.8
	S	38.76	24.54	33.32	7.77	12.17	11.21	6.05	0.8
09	P	30.43	16.79	24.99	8.23	12.17	10.99	5.85	0.8
	S	30.43	16.21	24.99	7.77	12.17	11.21	6.05	0.8
SHELL SIZE		+0.76 A−0	+0.25 B−0	±0.12 C	+0.25 D−0	+0.76 E−0	F MAX	+0.15 G−0	+0.22 H−0

HARPOON WITH MONO BLOCK BRACKET

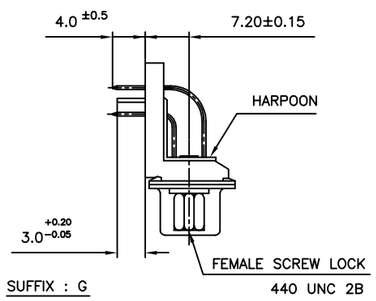

METAL BRACKET WITH HEX RIVETTING NUT

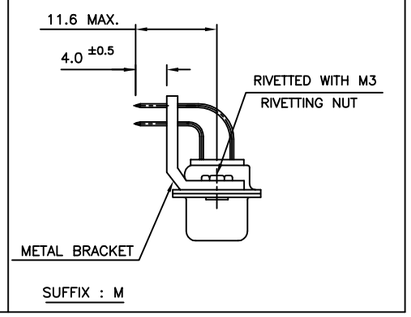

NOTE:—INSIDE DIMENSIONS OF MALE AND OUTSIDE DIMENSIONS OF THE FEMALE CONNECTOR.

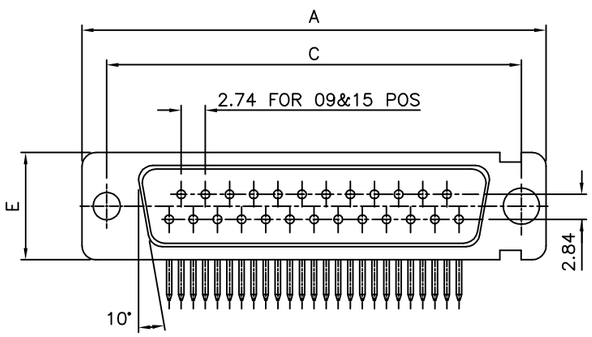

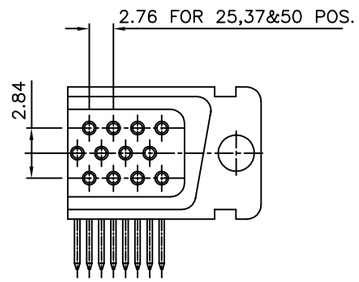

LAYOUT OF 50 POS.CONNECTOR

"This LF product meets European Union Directives and other country regulations as described in GS-22-008"

The housing will withstand exposure to 260°C peak temperature for 3.5 seconds in a wave solder application with a 1.6mm minimum thick circuit board.

Packaging as per GS-14-920

ORDERING INFORMATION

D B P V 25 P 5 64 C T X XXX LF

- SERIES
- SHELL SIZE
  - E,A,B,C,D
- CHARACTERISATION
  - M-DM SERIES
  - P-DP SERIES
- OPTIONS-1
  - BLANK-STANDARD
  - F-FLOAT MOUNTING
  - V-FEM. SCREW LOCK HEX. (UNC)
  - W-RIVETED FEM. SCREW LOCK ROUND UNC
  - N-THREADED FEM. SCREW LOCK M3
  - L-CLINCH NUT (M3)
  - O-CLINCH NUT (UNC)
  - S-SPACER RIVETTED TO SHELL
- NO.OF CONTACTS
  - 09,15,25,37,50
- CONTACTS
  - P - PIN
  - S - SOCKET
- TERMINATION TYPE
  - 5-ANGLED SPILL 2.54mm BETWEEN ROWS
  - 8-ANGLED SPILL 2.84mm BETWEEN ROWS
- CONTACT PLATING
  - BLANK- 0.2 µ Au
  - 64 - Au FLASH
  - 65 - 0.75µAu
  - 67 - 0.4µAu
  - 32 - 1.27µAu
- OPTIONS-2
  - BLANK-STANDARD
  - H-SHIELDING TERMINATION FINGERS
  - G-HARPOON
  - M-METAL BRACKET
  - C-WITHOUT BRACKET
- SHELL PLATING
  - BLANK-ZINC FOR DP/CADMIUM FOR DM
  - T-STD. TIN over Cu or Zinc Cr 3
- DIMPLES
  - X-ON MALE CONNECTORS ONLY
  - N- OBLIGATORY FOR DM
- SPECIAL CODES
- LEAD FREE

TECHNICAL SPECIFICATIONS

SHELLS	:	TIN/CADMIUM/ZINC PLATED STEEL
INSULATOR MATERIAL	:	SELF EXTINGUISHING THERMOPLASTIC- TO UL CLASS 94 V0 THE HOUSING WILL WITHSTAND EXPOSURE TO 260-265°C IF WE USE PROTECTIVE ADHESIVE (type Kapton or Teflon) OR PROTECTIVE METALLIC DEVICE
CONTACTS DIA ON ACTIVE AREA	:	Ø1 MM.
CONTACTS MATERIAL	:	COPPER ALLOY
CONTACT PLATING	:	GOLD OVER NICKEL
OPERATING TEMPERATURE	:	-55°C +125°C
OPERATING CURRENT	:	7.5 A PER CONTACT
CONTACT RESISTANCE	:	≤7.3 m Ω
INSULATION RESISTANCE	:	≥5000 M Ω
MAXIMUM VOLTAGE	:	1000 V.r.m.s
MECHANICAL ENDURANCE	:	500 MATINGS MIN.FOR ≥0.75 µGOLD PLATING
	:	200 MATINGS MIN.FOR ≤ 0.40 µGOLD PLATING
DAMP HEAT	:	56 DAYS FOR ≥0.75 µGOLD PLATING
	:	21 DAYS FOR ≤ 0.40 µGOLD PLATING

mat'l. code		surface ISO 1302 √	tolerance ISO 406 ISO 1101	projection	product family
ltr	ecn no	dr	date	tolerances unless otherwise specified	title
G	i06-0074	GVJ	2006/06/08	angles / linear	D-SUB A/S CONNECTOR (DP &DM SERIES WITH ASSEMBLY OPTIONS)
					MM
					scale —
				dr: Mini K Vandanath 1999/03/20	dwg no C-DSUB-0069
				engr: George V Joseph 1999/03/20	sheet 1 of 1
				chr: George V Joseph 2006/06/23	size A3
				appd: K-V SIVADAS 2006/06/23	type Product Customer Drawing
sheet index	revision	G			
	sheet	1			

FCIconnect.com
Copyright FCI

form: A3

PDM: Rev:G STATUS:Released Printed: Aug 23, 2006