PART NUMBER	SSL-LX3044ID	REV	H

REV	E.C.N. NUMBER AND REVISION COMMENTS	DATE
A	REMOVED FLAT EDGE FROM FLANGE	04.28.92
B	UPDATED SPECS	11.15.92
C	UPDATED VIEW ANGLE	01.20.95
D	UPDATED INTENSITY	02.21.95
E	E.C.N.#10BRDR. & REDRAWN IN 3D	04.11.01
F	E.C.N.#10BRDR. & REDRAWN/#11703	04.04.11
G	E.C.N.#11729	04.04.11
H	ECN-Lumex202000078	12.08.20

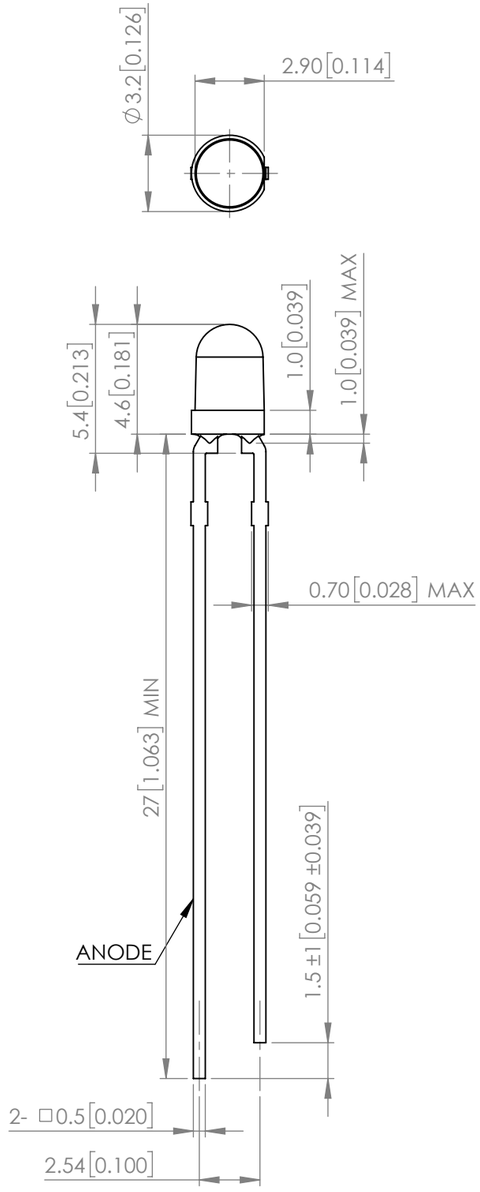

ELECTRO-OPTICAL CHARACTERISTIC TA=25℃

PARAMETER	MIN	TYP	MAX	UNITS	TEST COND
PEAK WAELENGHT	-	627	-	nm	If=20mA
FORWARD VOLTAGE	-	1.9	2.3	Vf	If=20mA
REVERSE CURRENT	-	-	10	uA	V_R=5V
LUMINOUS INTENSITY	-	20	-	mcd	If=20mA
VIEWING ANGLE	-	50	-	2x theta1/2	-
EMITTED COLOR	RED				
EPOXY LENS FINISH	RED DIFFUSED				

ABSOLUTE MAXIMUM RATINGS TA=25℃

PARAMETER	MAX	UNITS
PEAK FORWARD CURRENT*	160	mA
FORWARD CURRENT	30	mA
REVERSE VOLTAGE	5	V
POWER DISIPATION	75	mW
STORAGE TEMPERATURE	-40 TO +85	℃
OPERATING TEMPERATURE	-40 TO +85	℃
SOLDERING TEMPERATURE**	3 SEC. MAX. @260	℃

***t<10us**
****2.0mm FROM BODY**

STATIC DEVICE FOLLOW PROPER
E.S.D. HANDLING PROCEDURES
WHEN WORKING WITH THIS PART

*UNLESS OTHERWISE SPECIFIED TOLERANCES PER DECIMAL PRECISION ARE: X=±1 (±0.039), X.X=±0.5 (±0.020), X.XX=±0.25 (±0.010), X.XXX=±0.127 (±0.005). LEAD SIZE=±0.05 (±0.002), LEAD LENGTH=±0.75 (±0.030). MIN= +DECIMAL PRECISION -0.00 MAX.= +0.00 -DECIMAL PRECISION

LUMEX® Creating LED and LCD Solutions Together™
425 N. GARY AVE.
CAROL STREAM, IL 60188
PHONE : 800-278-5666
FAX : 630-315-2150
WEB : WWW.LUMEX.COM

3.2W*4.6H, T-3mm (T-1) 627nm RED LED, RED DIFFUSED LENS.

****THE SPECIFICATIONS MAY CHANGE AT ANY TIME WITHOUT NOTICE.****

CONFIDENTIAL INFORMATION
THE INFORMATION CONTAINED IN THIS DOCUMENT IS THE PROPERTY OF LUMEX INC. EXCEPT AS SPECIFICALLY AUTHORIZED IN WRITING BY LUMEX INC., THE HOLDER OF THIS DOCUMENT SHALL KEEP ALL INFORMATION CONTAINED HEREIN CONFIDENTIAL AND SHALL PROTECT SAME IN WHOLE OR IN PART FROM DISCLOSURE AND DISSEMINATION TO ALL THIRD PARTIES.

DATE : 2020.12.08	DRAWN BY : E.C.
PAGE : 1 OF 1	CHKD BY : E.C.
SCALE : NTF	APRVD BY : G.Y.
UNIT : mm [INCH]	Pb