Unauthorized reproduction of this drawing is not permitted.
This drawing contains proprietary and confidential information.

Spring Loaded Contacts
With PRECI-DIP Integrated CLIP

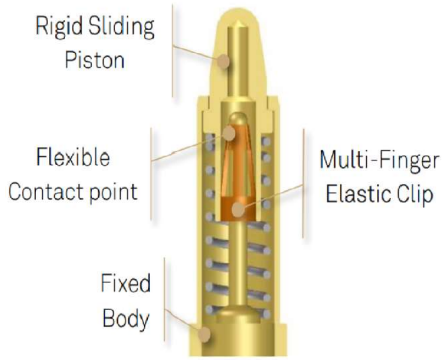

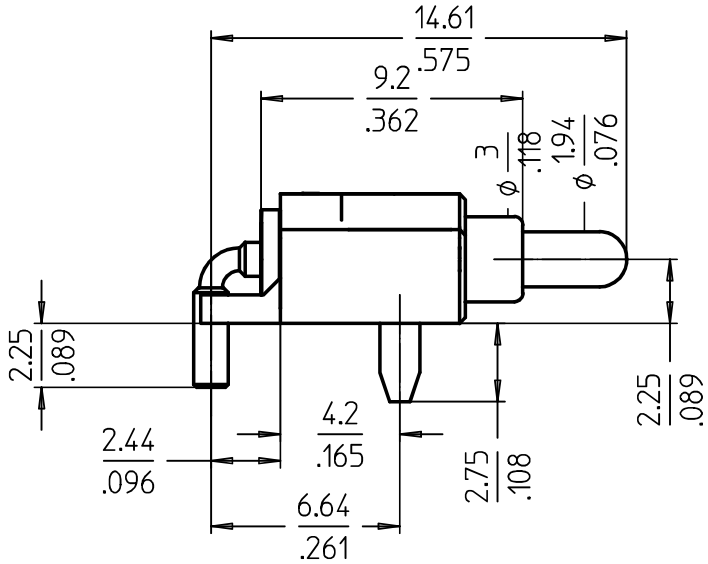

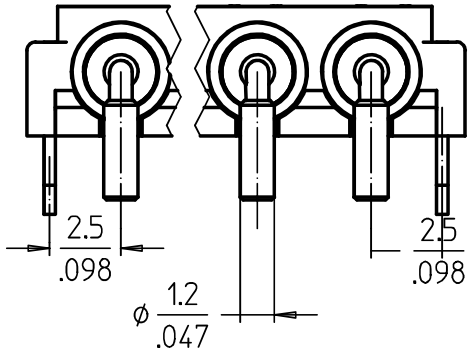

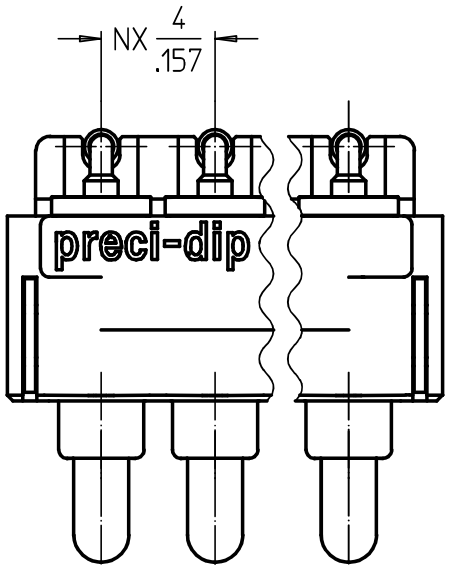

(2:1)

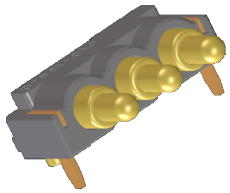

NOTES:

MECHANICAL REQUIREMENTS:
- Durability: 20'000 cycles
- Theoretical stroke: S= 2.30 mm [.090]
- Spring forces (F):
  - Finit= 2.10 N at Hinit= 14.61 mm [.575]
  - F1= 2.25 N at H1= 14.41 mm [.567]
  - Fnom= 2.88±0.65 N at Hnom= 13.61 mm [.536]
  - F2= 3.91 N at H2= 12.31 mm [.485]
  - Recommended working range: between H1 and H2
  - Forces are measured in mean value of compression / decompression
  - * Theoretical values of spring design

ELECTRICAL REQUIREMENTS:
- Contact resistance:
  - R= 30 mOhms max in static mode at Hnom
- Current per individual contact in free air at ambient temperature:
  - ICont= 12 A at Hnom with temperature raise max 30°C

ENVIRONMENTAL REQUIREMENTS:
- Operating temperature: -25 °C / +125 °C
- Storage temperature: -40 °C / +125 °C
- Relative humidity: 5% / 95%

MATERIALS / PLATINGS:
- Barrel: CuZn36Pb3 - 0.07 µm Au / 2.5 µm Ni
- Rod: CuSn4Pb4Zn4 - 0.125 µm Au / 2.5 µm Ni
- Piston: CuZn36Pb3 - 0.4 µm Au / 2.5 µm Ni
- Spring: Stainless steel DIN 17224
- Clip: BeCu C17200 - 0.4 µm Au / 2.5 µm Ni

Replace N by the number of desired poles,
Available from 2 to 7 position

		Remplace:		
		Remplacé par:		
Rigth Angle Connector 12 Amps	4:1	Dessiné	24.07.2024	C.Bidault
		Contrôlé		
preci-dip swiss world connect		N° dessin		Révision
		8PC-27-000N-03-638		