ITEM	MOLEX P/N	DESCRIPTION	QTY	UOM
A,B	469920440	MINIFIT JR RCPT DR GW V-2 04 CKT BLU	2	PC
C	39000077	MiniFit Term Crp Fem Chn Bs Tin 16awg	8	PC
PL	--	PAPER PRINTED PAPER WHITE (S100X150YAJ)	1	PC

FROM	TO	WIRE SIZE	WIRE TYPE	COLOR
A1	B1	16 AWG	UL 1007	BLUE
A2	B2	16 AWG	UL 1007	BLUE
A3	B3	16 AWG	UL 1007	BLUE
A4	B4	16 AWG	UL 1007	BLUE

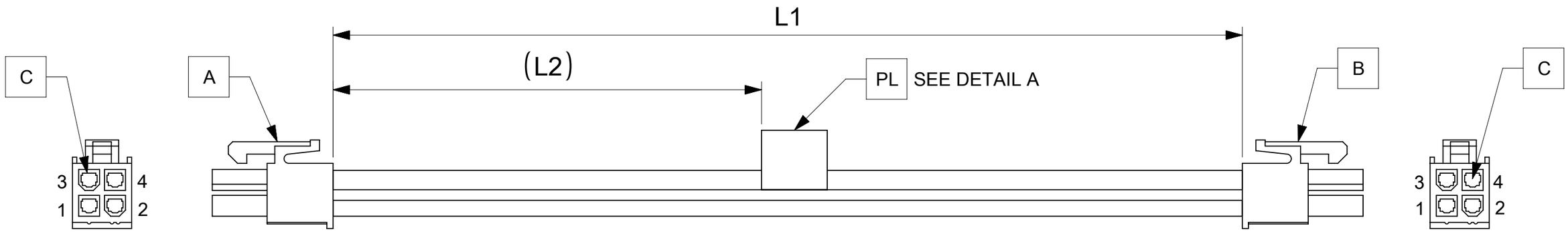

TABLE			
FG PART #	L1	L2 (REF)	TITLE
2261962042	150±4	65	Mini-Fit versa BI R-R 4ckt 150mm disc Sn
2261962043	300±4	140	Mini-Fit versa BI R-R 4ckt 300mm disc Sn
2261962044	600±6	288	Mini-Fit versa BI R-R 4ckt 600mm disc Sn

NOTE:
1. CABLE ASSEMBLY MUST PASS 100% CONTINUITY AND POLARITY TEST
2. CONNECTOR VIEW IS SHOWN FROM MATING SIDE
3. LABEL TEXT MUST BE 2MM MAX IN HEIGHT WITH ARIAL FONT AND WRAPPED IN FLAG TYPE ON A SINGLE WIRE.
4. THE PRODUCT HAS TO MEET PERFORMANCE SPECIFICATION AS PER ES-36586-004

MOLEX PN
MOLEX
BATCH WK/YR

DETAIL A

THIS DRAWING CONTAINS INFORMATION THAT IS PROPRIETARY TO MOLEX ELECTRONIC TECHNOLOGIES, LLC AND SHOULD NOT BE USED WITHOUT WRITTEN PERMISSION

FUNCTIONAL SYMBOLS: FA = 0, FC = 0, FP = 0
DIVISIONAL SYMBOLS

DIMENSION UNITS	SCALE
mm	NTS

GENERAL TOLERANCES (UNLESS SPECIFIED)

ANGULAR TOL	± °
4 PLACES	±
3 PLACES	±
2 PLACES	±
1 PLACE	±
0 PLACES	±

DRAFT WHERE APPLICABLE MUST REMAIN WITHIN DIMENSIONS

CURRENT REV DESC:

EC NO: 775814
DRWN: NAVEEB6 2024/01/25
CHK'D: SKUMAR07 2024/02/05
APPR: SKUMAR07 2024/02/05

INITIAL REVISION:
DRWN: RITIKP 2023/11/30
APPR: SKUMAR07 2023/12/11

molex

SEE TABLE

PRODUCT CUSTOMER DRAWING

DOCUMENT NUMBER	DOC TYPE	DOC PART	REVISION
2261962042	PSD	000	B

THIRD ANGLE PROJECTION	DRAWING	SERIES	MATERIAL NUMBER	CUSTOMER	SHEET NUMBER
	A3-SIZE	226196	SEE TABLE	GENERAL MARKET	1 OF 1

DOCUMENT STATUS	P1	RELEASE DATE	2024/02/05 05:49:17

FORMAT: master_tpl_ed-A3
REVISION: J1
DATE: 2021/05/0