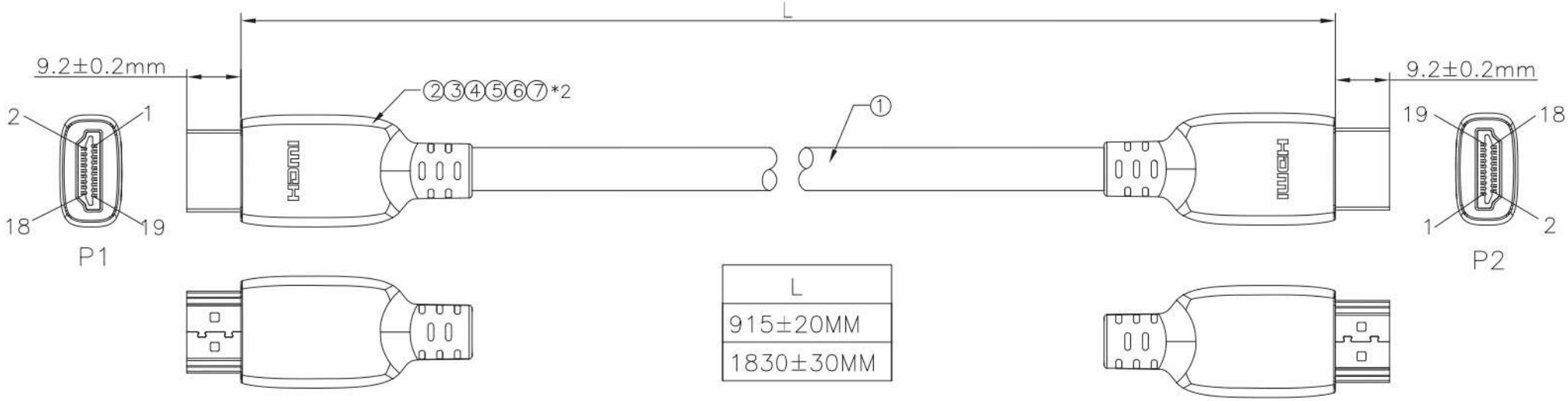

L
915±20MM
1830±30MM

Pin Assignment

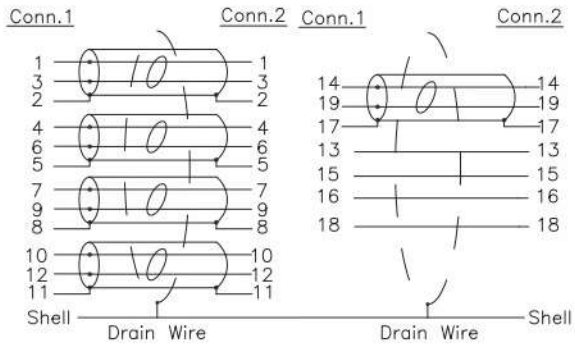

ELECTRICAL TEST:

1.100% OPEN AND SHORT & MISWIRE TEST
2.CONTACT RESISTANCE:3 OHM(MAX)
3.INSULATION RESISTANCE:10M OHM(MIN),DC 300V/10ms.

Notice:

1.Support Bandwidth up to 48Gbps
2.Support Resolution up to 8k@60Hz,4K@120Hz.
3.ALL COMPONENTS ARE RoHS AND REACh COMPLIANT.

NO	DESCRIPTION	Q'TY	UNIT
7	HDMI A Type Male Connector dust cap	2	pcs
6	Outside Molding: 45P PVC Color:Black	20	g
5	Inside Molding: Transparent PE	8	g
4	Copper foil 25u W=5MM	0.08	M
3	HDMI A Type Male Connector The tinplate	2	pcs
2	HDMI A Type Male Connector, Insulation Black, Pin Gold Plated, Shell Gold Plated	2	pcs
1	HDMI2.1~[30AWG(1/0.26TC)+EAM]*4P+[30AWG(1/0.26TC)+EAM]*1P+30AWG(1/0.254TC)*4C+AEB(16/8/0.12AL85%AL)~ OD:6.0MM~Color:Black Marking:ULTRA HIGH SPEED HDMI® CABLE(←25.4mm→) E515987 ㊀ AWM STYLE 20276 80℃ 30V VW-1 C1	L	M

REV	ECN NO.	DESCRIPTION	DATE

TOLERANCE	INCHES	M/M
.X	.015	.30
.XX	.010	.10
.XXX	.005	.05

CompuCableUSA

TITLE: HDMI2.1 AM TO AM Cable (30AWG) 3FT/6FT

DRAWN BY	Bin Chen	ITEM NO.	AHM8K60-XX
CHECK BY		SCALE NONE	DRAWING NO.: REV. A0
		UNIT mm	
APPD BY		DATE 2022.09.16	1/1