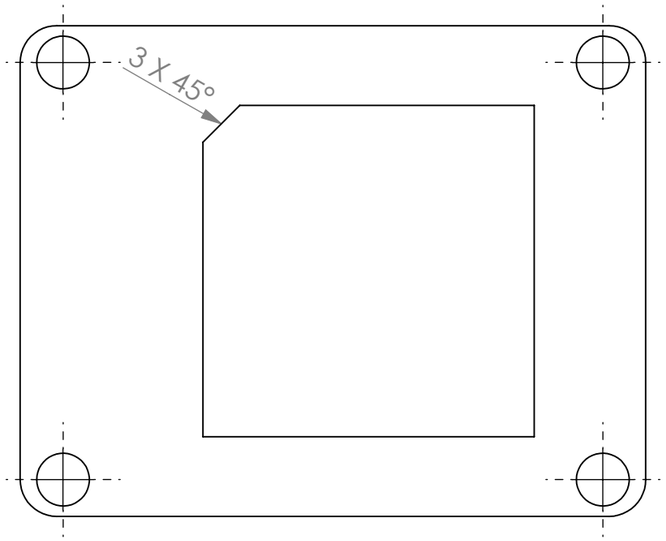

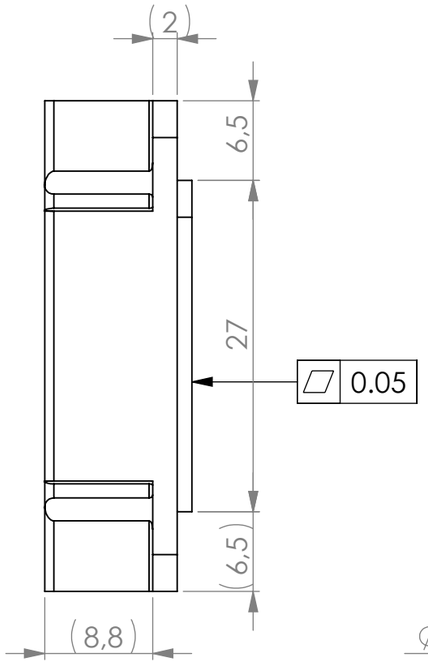

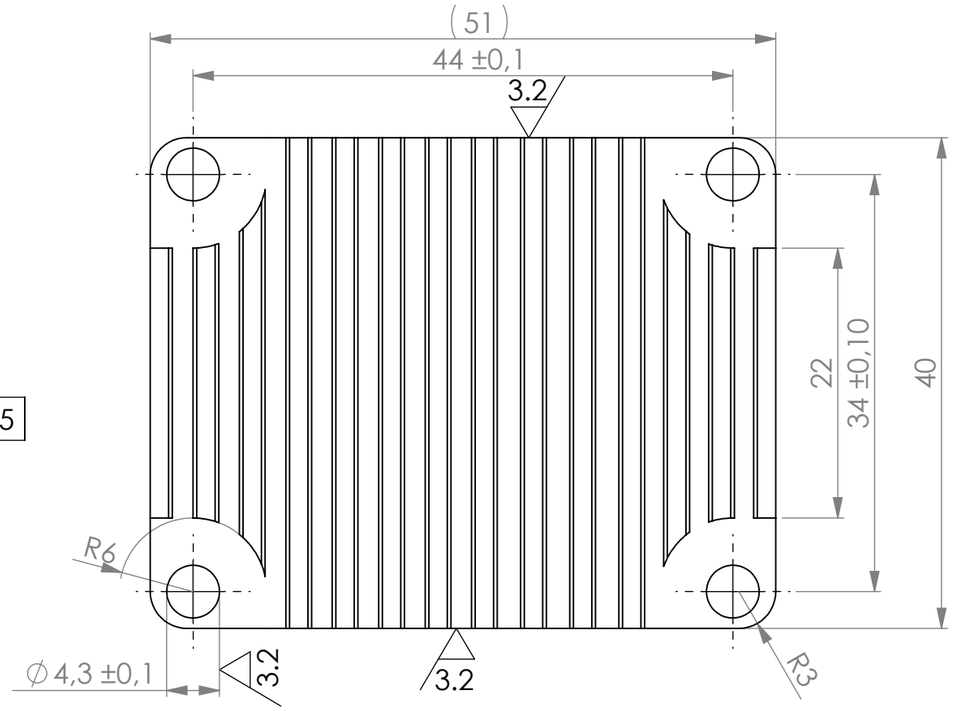

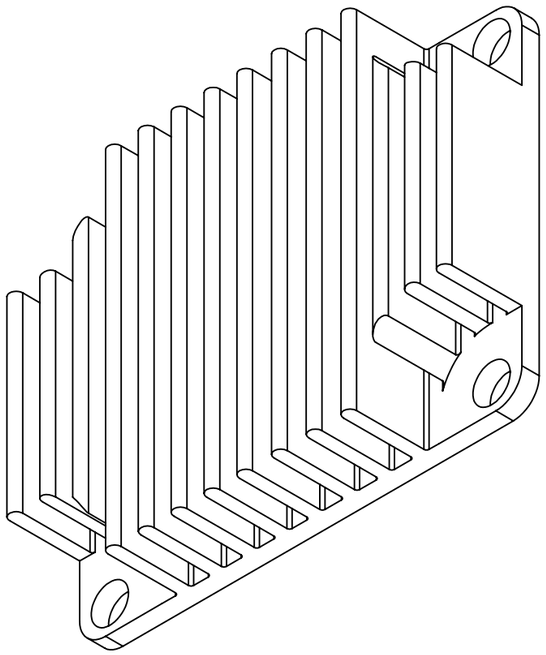

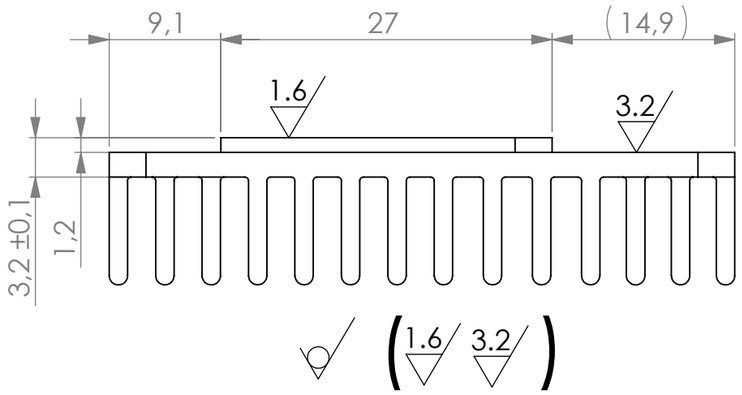

Oberfläche: schwarz eloxiert, nach Bearbeitung

trenz electronic

UNLESS OTHERWISE SPECIFIED: DIMENSIONS ARE IN MILLIMETERS SURFACE FINISH: TOLERANCES: DIN ISO 2768- f H LINEAR: ANGULAR:	FINISH:			DEBURR AND BREAK SHARP EDGES ISO 13715 Outer Edge: -0.1 Inner Edge: +0.2	DO NOT SCALE DRAWING	REVISION
					Beendorfer Str. 23, 32609 Hüllhorst, GERMANY www.trenz-electronic.de	
	NAME	SIGNATURE	DATE		TITLE: Universalkühler	
DRAWN	DARM		24.01.2023			
CHK'D						
APPV'D						
MFG						
Q.A				MATERIAL: EN AW 6060 T66	DWG NO. 33317	A3
				WEIGHT: 29.21	SCALE:2:1	SHEET 1 OF 1