SIGN	DATE	DESCRIPTION	APPROVER
1	01/27'07	The soldering temperature from 245° to 250°	Aaron
2	12/13'10	The operating temperature from -30°C to +105°C to -40°C to +115°C	Runner
3	12/13'10	The color is changed	Runner
THIS IS CAD DRAWING, DO NOT REVISE MANUALLY!!!			

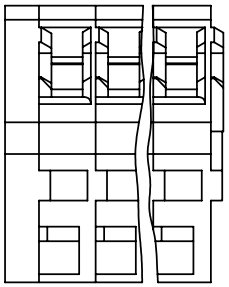

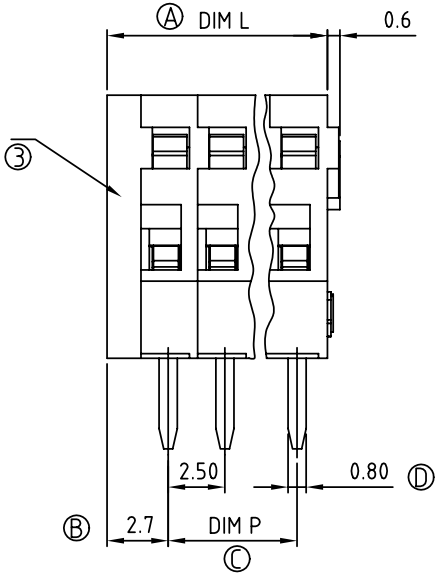

N=Number of poles

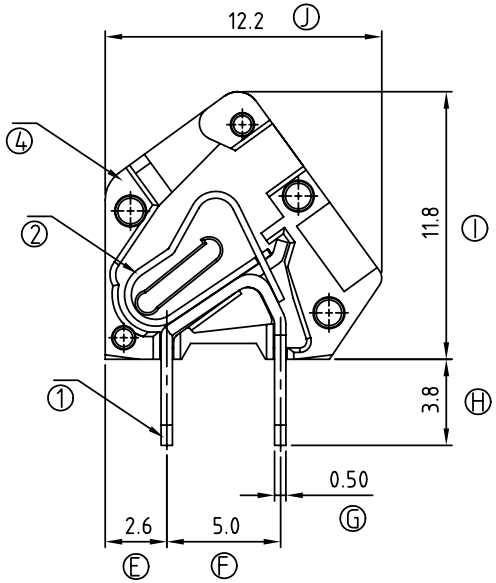

Material

- Item ① Solder Pin(Contact pin) : Brass ,Tin plated
- Item ② Spring clamp : Stainless steel
- Item ③ Terminal cover: Thermoplastic (UL94V-0)
- Item ④ Terminal housing: Thermoplastic (UL94V-0)

Electrical cULus

- Voltage rating:150V
- Current rating:4A
- Wire range:
- Solid wire(AWG):22-28
- Stranded wire(AWG):22-28
- Wire strip length:6-7mm
- Withstanding Voltage:1.3KV
- 2 Operating temperature:-40°C to +115°C
- 1 Soldering temperature:250°C±10°C/5 Sec
- Safety approval : cULus

H E xx 4 0 x 1 xxxx G

G: Pb<40,000ppm

Poles
- 02 2Contacts
- 03 3Contacts
- ` `
- 12 12Contacts

- 0 Black(RAL9005)
- 3 Orange(RAL2011/P) 3
- 5 Green(RAL6018/T)
- 6 Blue(RAL5015/A)
- 8 Grey (RAL7004/P)

- 0000 Standard @ Logo
- 000A Standard ANY Logo
- Any special item by customer request, please contact sales department.

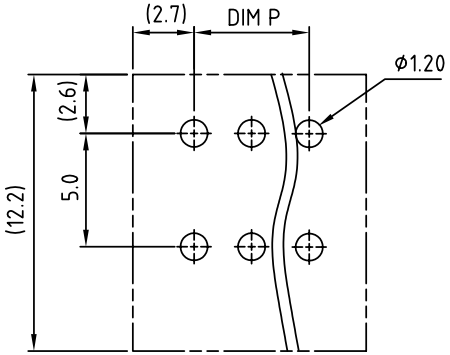

P.C.B LAYOUT

Dimension

DIM L	N×2.5+1.5
DIM P	(N-1)×2.5

N=Number of poles

POLES	DIM A	DIM B
2p-8p	±0.15	±0.15
9p-12p	±0.25	±0.20

ANYTEK

CUSTOMER COPY

ALL RIGHTS RESERVED. REPRODUCTION OR ISSUE TO THIRD PARTIES IN ANY FORM WHATEVER IS NOT PERMITTED WITHOUT WRITTEN AUTHORITY FROM THE PROPRIETOR. PROPERTY OF ANYTEK TECHNOLOGY CO., LTD

TITLE	HE 2.5 series without lever				
PART NO.	HExx40x1xxxxG			DWG NO.	8HE0002
APPROVED	CHECKED	DESIGNED	DRAWN	CUST NO.	
		Runner 2010.12.13	Aaron 2007.01.27	UNIT: mm / SCALE: NONE / SHEET: 01/01 / REV.: D	

Tolerance	
X.	±0.50
X.X	±0.30
X.XX	±0.10
X°	±1°