| SIGN | DATE | DESCRIPTION | APPROVER |
|---|---|---|---|
| 1 | 03/29`12 | Operating temperature is changed from -40°C to +130°C to -45°C to +120°C | Chen Bo |
| 2 | 03/29`12 | The Material is changed | Chen Bo |
| 3 | 03/29`12 | Add is cULus | Chen Bo |
| 4 | 03/29`12 | The dimension D & E are added | Chen Bo |
| 5 | 03/29`12 | Flange nut is changed | Chen Bo |

*THIS IS CAD DRAWING, DO NOT REVISE MANUALLY!!!*

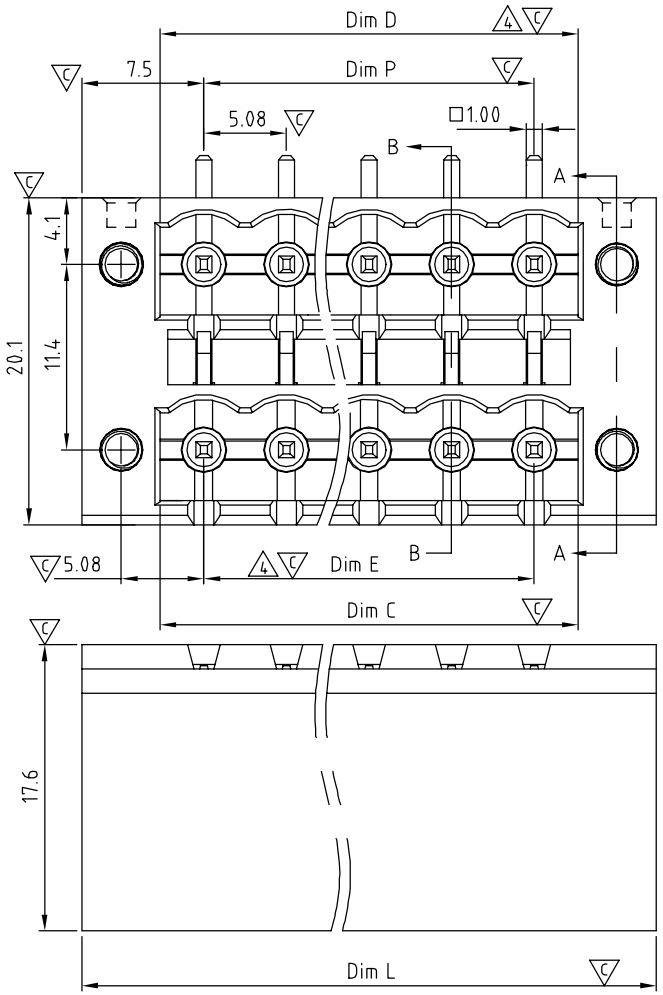


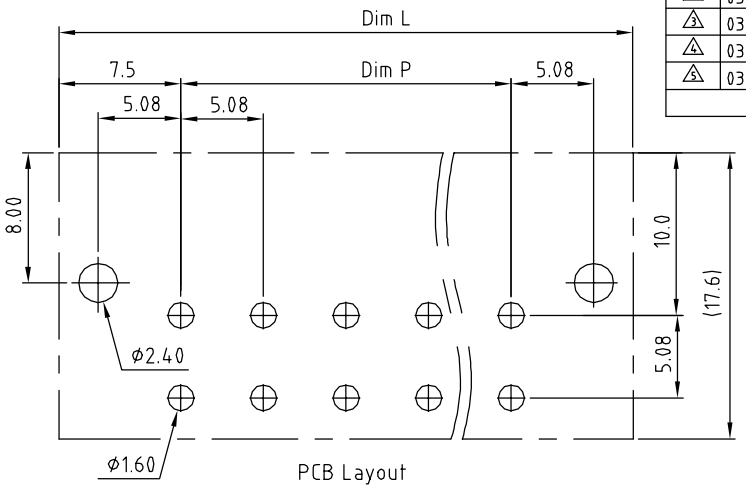


PCB Layout

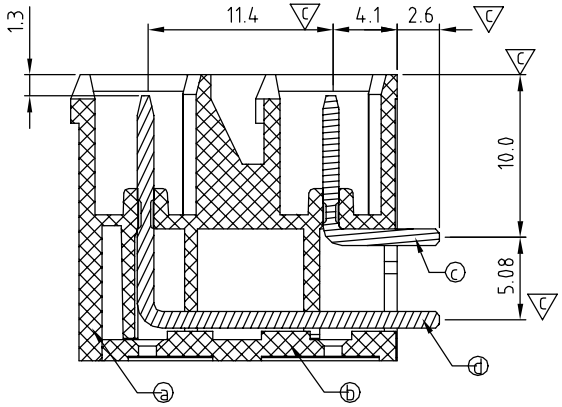


SECTION B-B

Material:
- Item a Terminal(housing): High temp. polyamide(UL94V-0)
- Item b Terminal(cover): High temp. polyamide(UL94V-0)
- Item c Male contact pin of short: Copper Tin plated
- Item d Male contact pin of long: Copper Tin plated
- Item e With flange nut: Brass M2.5

| Electrical: | cULus |
|---|---|
| Voltage rating: | 300V |
| Current rating: | 12A |
| Withstanding Voltage: | 1.6KV |
| Operating temperature: | -45°C to +120°C |
| Soldering temperature: | 280°C/10 Sec |
| Safety Approval: | c UL us |
| Critical dimension: | C |

KE xx 5 2 x 1 xxxx G

No. OF POLES
04: 2×2 POLES
06: 2×3 POLES
:
:
48: 2×24 POLES

COLOR
0: BLACK

G RoHS compliant (lead<4%) In copper Alloy

0000: "@" Logo (Standard)
000A: "ANYTEK" Mark

Any special item by customer requst. please contact sales department.

N = Number of poles
Dim L=(N+1)×5.08+4.84
Dim P=(N-1)x5.08
Dim C=(N-1)x5.08+5.4
Dim D=(N-1)x5.08+5.4
Dim E=(N-1)x5.08

| Poles | Dim L | Dim P | Dim C | Dim D | Dim E |
|---|---|---|---|---|---|
| 2×2-2×6p | ±0.15 | ±0.15 | +0.05 -0.05 | +0.05 -0.05 | ±0.15 |
| 2×7-2×12p | ±0.25 | ±0.25 | +0.10 -0.05 | +0.10 -0.05 | ±0.25 |
| 2×13-2×18p | ±0.35 | ±0.35 | +0.20 -0.05 | +0.20 -0.05 | ±0.35 |
| 2×19-2×24p | ±0.40 | ±0.40 | +0.25 -0.10 | +0.25 -0.10 | ±0.40 |

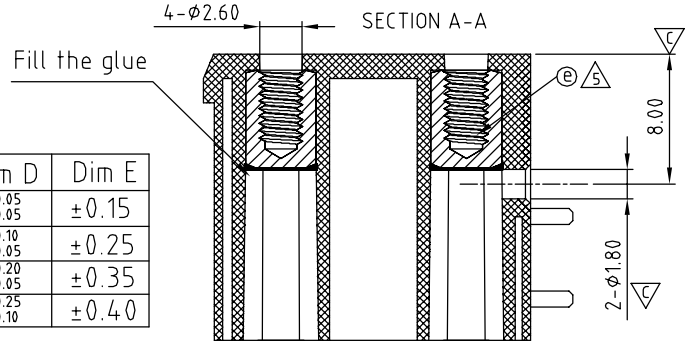


**ANYTEK**

**CUSTOMER COPY**

ALL RIGHTS RESERVED. REPRODUCTION OR ISSUE TO THIRD PARTIES IN ANY FORM WHATEVER IS NOT PERMITTED WITHOUT WRITTEN AUTHORITY FROM THE PROPRIETOR. PROPERTY OF ANYTEK TECHNOLOGY CO., LTD

| | | | | | |
|---|---|---|---|---|---|
| TITLE | KE 5.08mm With Flange Series (Right angle) THR TYPE | | | | |
| PART NO. | KExx52x1xxxxG | | | DWG NO. | 8KE0203 |
| APPROVED | CHECKED | DESIGNED | DRAWN | CUST NO. | |
| | | Chen Bo 03/29`12 | Chen Bo 03/29`12 | UNIT: mm / SCALE: NONE / SHEET: 01/01 / REV.: C | |

| Tolerance | |
|---|---|
| X. | ±0.50 |
| X.X | ±0.30 |
| X.XX | ±0.10 |
| X° | ±1° |