New Upgrade

Ender–3 direct extruding kit

Direct extruding mechanism
Complete nozzle kit

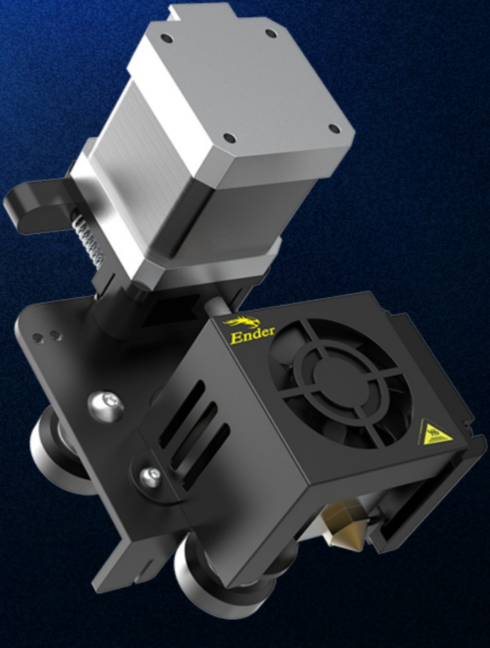

All–metal shell
Sturdy and
wear resistant

Stable running
No blockage
and no leakage

Direct extruding
More precise
feed–in

Direct extrudinng kit with two in one

New upgraded direct extruding kit has high quality

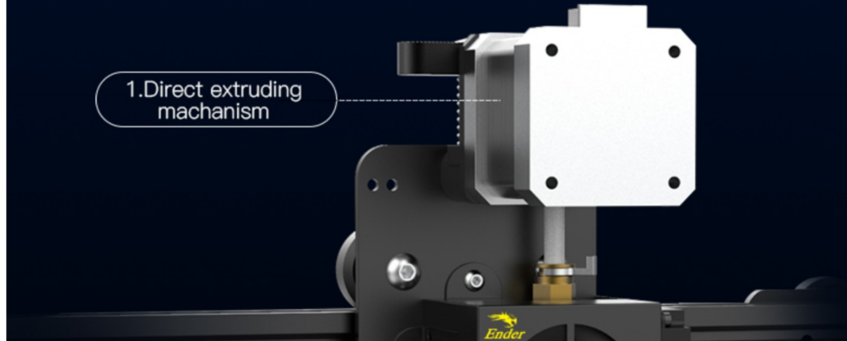

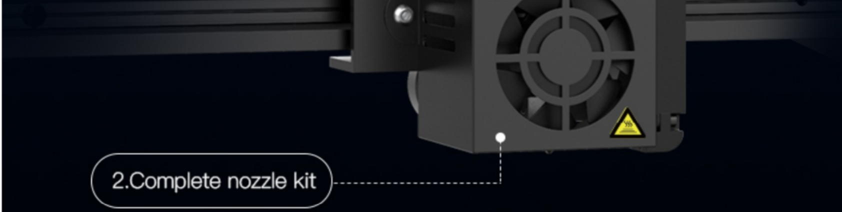

Integrated structure with all metal

It's sturdy and wear resisitant with all–metal shell and surface oxidation treatment; Integrated structure is convenient for wiring and replacing

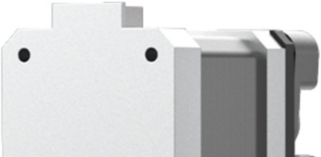

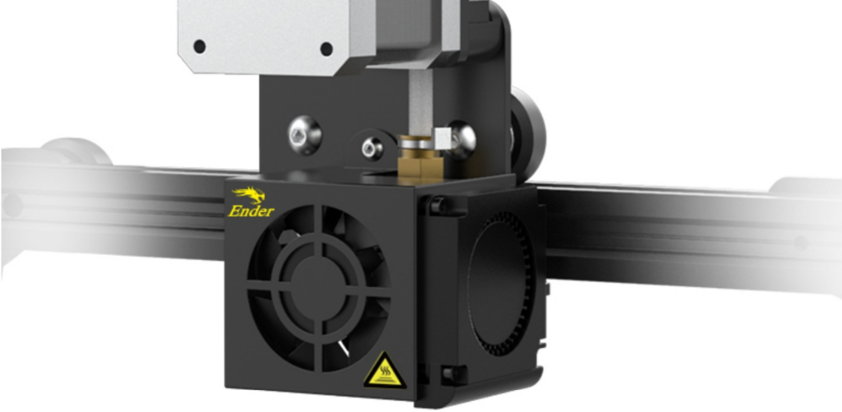

Direct extruding Smooth feed-in

Quality Motor: lower torque requirements on stepper motor, reducing the possibility of nozzle blockage when retracting filament and malfunction when loading new filament.

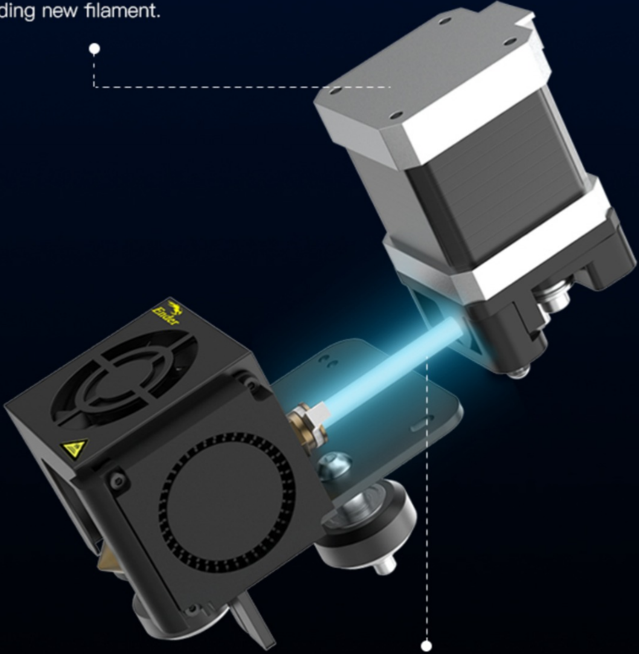

Even feed-in: there is more even feed-in with direct extruding than bowden extruding

Printing at high temperature
Strong compatibility

Compatible with more types of filaments when printing under high temperature, like flexible TPU. It can optimize TPU printing performance print with flexible filaments

- Slightly fold: unchanged

- Half fold: unchanged

- Complete fold: unchanged

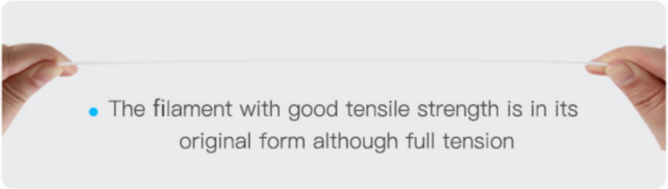

- The filament with good tensile strength is in its original form although full tension

Easy to install and use

Switch direct extrusion or bowden extrusion at any time and easy to disassembly. It doesn't affect the inherent function of printer because it's a complete extrusion kit.

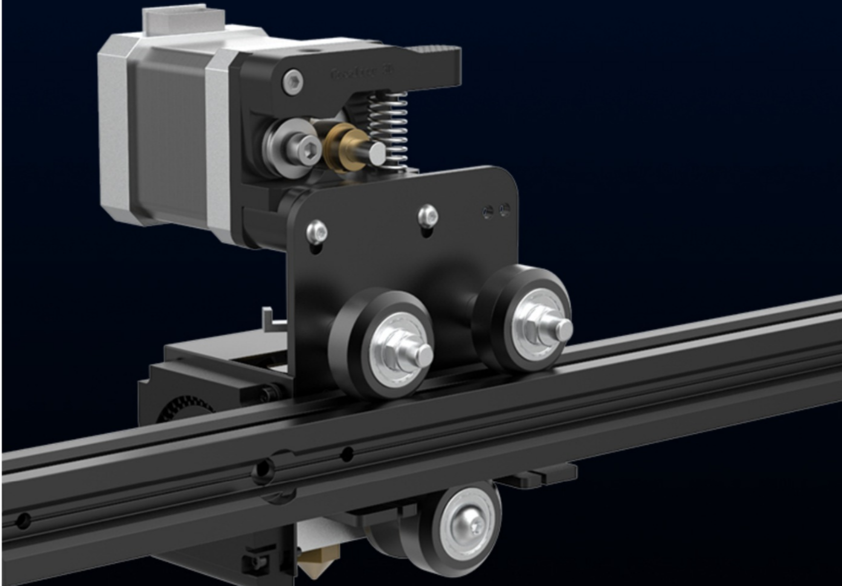

Product information

Product name: Ender-3 direct extruding mechanism kit

Product color: black

N.W.： 0.379kg

Product size： 76*96*125mm

Material: aluminum alloy

Nozzle diameter： 0.4mm

Print precise： ±0.1mm

Output voltage： 24V

Rated voltage： 115V/230V 50/60HZ

Applicable models： Ender-3, Ender-3S, Ender-3Pro

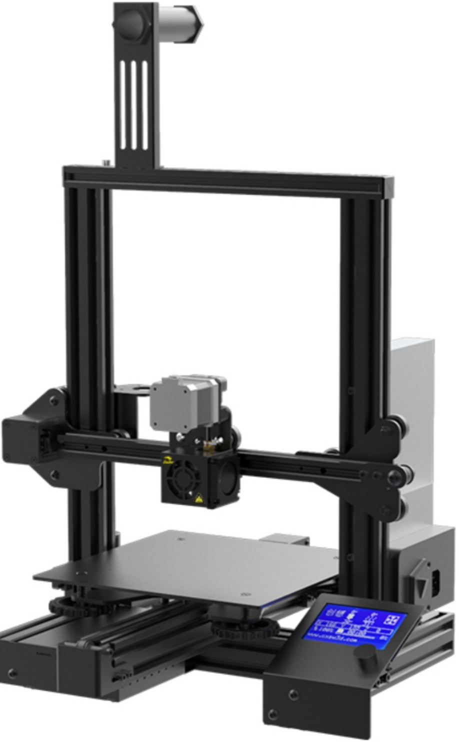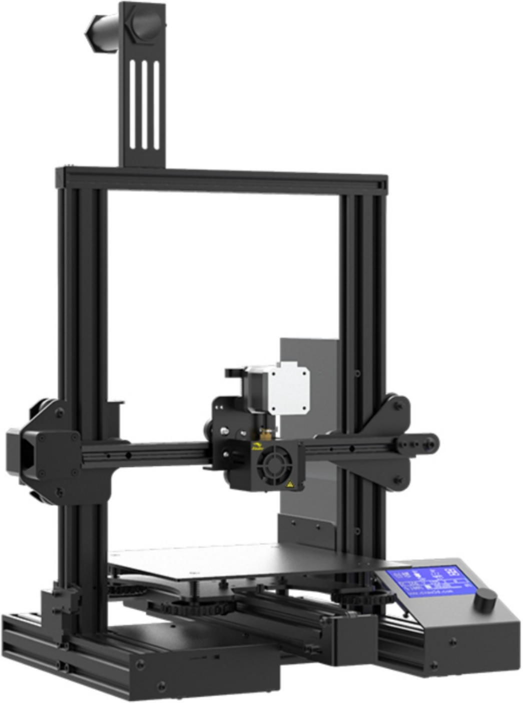Product display