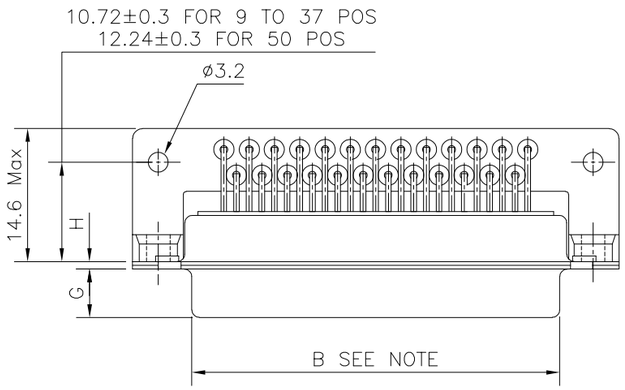

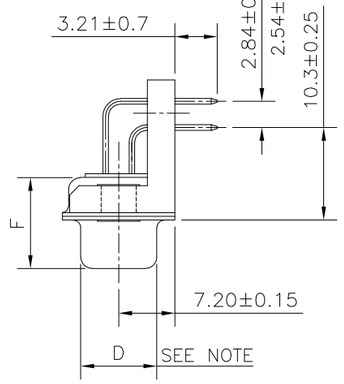

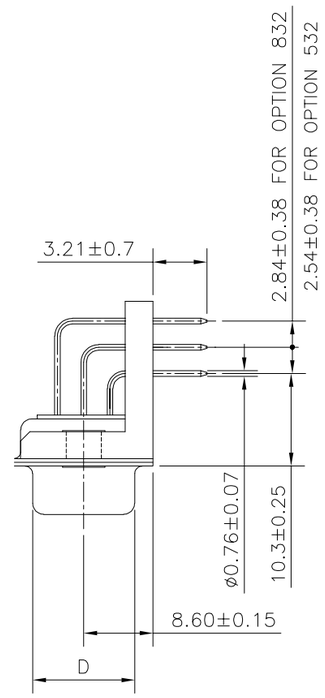

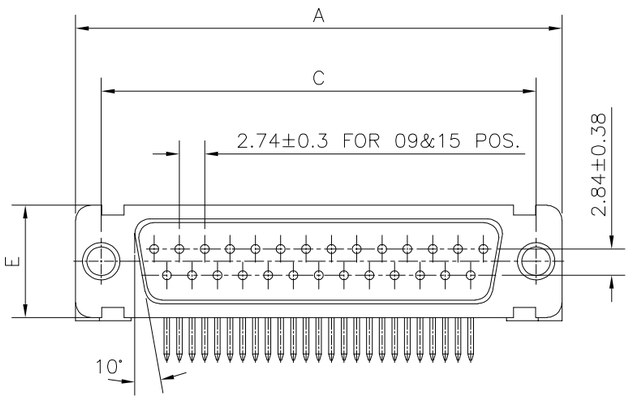

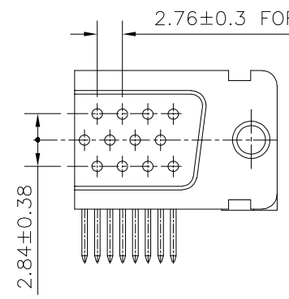

LAYOUT OF 50 POS.CONNECTOR

50	P	66.65	52.68	60.99	10.95	14.99	10.57	5.82	0.8
	S	66.65	52.30	60.99	10.62	14.99	10.64	5.05	0.8
37	P	68.94	55.30	63.37	8.23	12.17	10.57	5.82	0.8
	S	68.94	54.71	63.37	7.77	12.17	10.64	5.05	0.8
25	P	52.65	38.84	46.91	8.23	12.17	10.57	5.69	0.8
	S	52.65	38.25	46.91	7.77	12.17	10.64	5.05	0.8
15	P	38.76	25.12	33.20	8.23	12.17	10.46	5.69	0.8
	S	38.76	24.79	33.20	7.77	12.17	10.64	5.05	0.8
09	P	30.43	16.79	24.87	8.23	12.17	10.46	5.69	0.8
	S	30.43	16.21	24.87	7.77	12.17	10.64	5.05	0.8
SHELL SIZE		+0.76 A−0	+1.25 B−0	+0.25 C−0	+0.26 D−0	+0.76 E−0	+0.51 F−0	+1.25 G−0	+0.22 H−0.29

NOTE:-INSIDE DIMENSIONS OF MALE AND OUTSIDE DIMENSIONS OF THE FEMALE CONNECTOR.

TECHNICAL SPECIFICATIONS

SHELLS	:	CADMIUM PLATED STEEL
INSULATOR MATERIAL	:	SELF EXTINGUISHING THERMOPLASTIC– TO UL CLASS 94 V0
CONTACTS DIA ON ACTIVE AREA	:	ø1 MM.
CONTACTS MATERIAL	:	COPPER ALLOY
CONTACT PLATING	:	GOLD OVER NICKEL
OPERATING TEMPERATURE	:	−55°C +125°C
OPERATING CURRENT	:	7.5 A PER CONTACT
CONTACT RESISTANCE	:	⩽7.3mΩ
INSULATION RESISTANCE	:	⩾5000 MΩ
MAXIMUM VOLTAGE	:	1000 V.r.m.s
MECHANICAL ENDURANCE	:	500 MATINGS
DAMP HEAT	:	56 DAYS

ORDERING INFORMATION

D B M X 25 P 5 32 X N XXX

- SERIES
- SHELL SIZE
  E,A,B,C,D
- CHARECTERISATION
  M–DM SERIES
- OPTIONS
  BLANK– STANDARD HOLE
- NO.OF CONTACTS
  09,15,25,37,50
- CONTACTS
  P – PIN
  S – SOCKET
- TERMINATION TYPE
  5–ANGLED SPILL 2.54mm BETWEEN ROWS
  8–ANGLED SPILL 2.84mm BETWEEN ROWS
- CONTACT PLATING
  32 – 1.27μ Au
- SHELL PLATING
  BLANK– CADMIUM
- OBLIGATORY
  N – FOR DM MIL
- SPECIAL CODES

PCB DRILLING DETAIL – 09 TO 37 POS

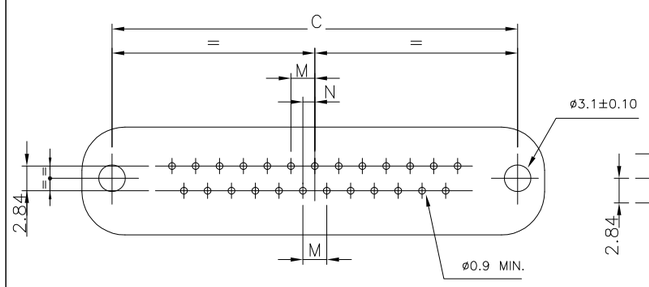

M= 2.74 FOR 09&15 POS
2.76 FOR 25,37&50 POS

PCB DRILLING DETAIL – 50 POS

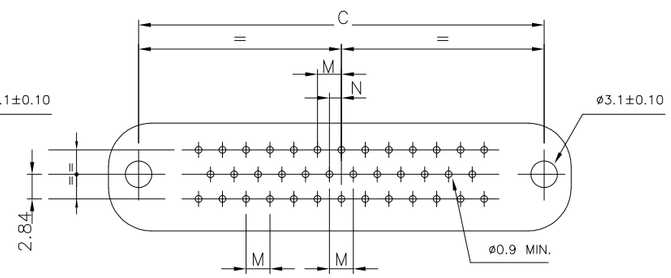

N= 1.37 FOR 09&15 POS
1.38 FOR 25,37&50 POS

mat'l. code SEE NOTES				surface ISO 1302		tolerance ISO 406 ISO 1101	projection
ltr	ecn no	dr	date	tolerances unless otherwise specified			
L	ELX-I-38410	GM	18-09-2020	angles	linear	.0±.0.3	mm
						.00±.0.1	
				0°±1°		.000±.05	scale 1:1
				dr	GREGAR M	17-09-2020	
				engr	GREGAR M	18-09-2020	
				chr	SREERAJ K R	18-09-2020	
				appd	SANOJ P K	18-09-2020	
sheet index	revision	L					
	sheet	1					

product family: D–SUB

title: D–SUB DM A/S CONNECTOR
(DM SERIES WITH 10.3 MM FOOT PRINT)

dwg no: C–DSUB–0122 | sheet 1 of 1 | size A3

type: Product Customer Drawing

Amphenol FCi

© 2016 AFCI