R1G280 Series Motorized Impeller

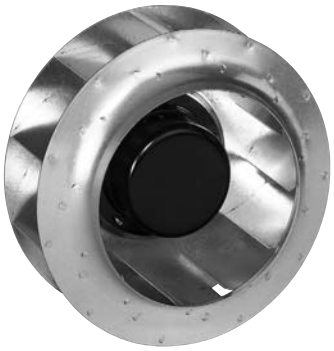

Ø 280mm Backward Curved

- These centrifugal fans have backward curved blades offering an extremely good aerodynamic efficiency
- Impeller completely made of sheet aluminium.
- Wiring connection: Red = + ; Blue = - ; White = Tach Output; Yellow = Speed Control
- Integrated electronics with reverse polarity and locked-rotor protection. Rotation is CW. Tach Ouput. Cable exit: variable.
- UL, CSA, VDE approvals on most models, please contact application engineering.
- Recommended inlet ring: 96360-2-4013.

Part Number	Curve	CFM @ 0	VDC	Volt. Range	Power (W)	dBA	Max Amb. Temp C	Bearing Type	Speed (RPM)	Impeller Material	Wgt. (lbs)
R1G280-AE45-52	1	1031	24	16 to 28	95	71	60	Ball	1710	Galv. Steel	6.00
R1G280-AE47-52	1	1031	48	36 to 57	95	71	60	Ball	1710	Galv. Steel	6.00

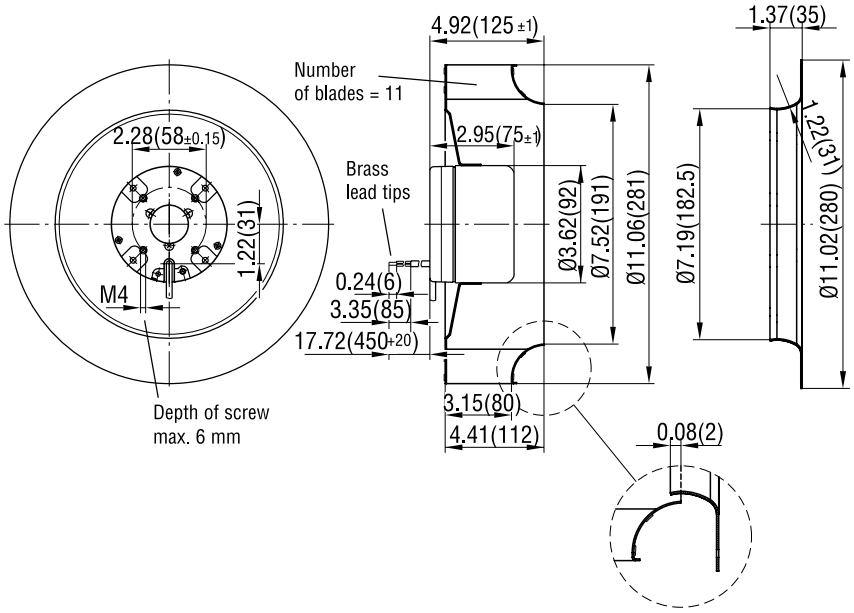

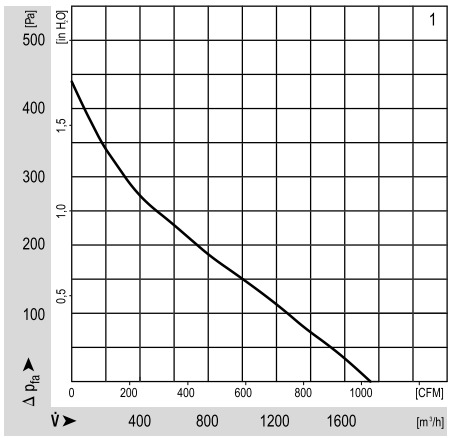

ebmpapst

e-mail: sales@us.ebmpapst.com · TEL: 860-674-1515 · FAX: 860-674-8536
ebm-papst Inc., 100 Hyde Road, Farmington, CT 06034 USA
ebm-papst Inc., 2006 © ebm-papst Inc. reserves the right to change any specifications or data without notice