NextGen Components,Inc.

PART CODE: **SA315M0000S001**

SPECIFICATION SHEET

SPECIFICATION SHEET NO.	Q1019-SA315M0000S001
DATE	Oct. 19, 2023
REVISION	A3
DESCRIPITION	SMD SAW Resonator L5.0*W5.0*H1.5mm 5050 Type 8 Pads S3 Series 315.000MHz, Insertion Loss: 2.0 dB Max. Tolerance: +/-75KHz Operating Temp. Range -40°C ~+85°C Reflow Profile Condition 260 °C Max. Tape/Reel, 1000pcs/Reel RoHS/RoHS III compliant
CUSTOMER	
CUSTOMER PART NUMBER	
CROSS REF. PART NUMBER	
ORIGINAL PART NUMBER	TGS SR 315.0MA S3 TLF
PART CODE	SA315M0000S001

VENDOR APPROVE			
Issued/Checked/Approved	Mandy Xu	Ruby Zhang	Jack Zhang
DATE: Oct. 19, 2023			

CUSTOMER APPROVE
DATE:

NextGen Components, Inc. sales@NextGenComponent.com www.NextGenComponent.com

SMD SAW RESONATOR 5050 TYPE S3 SERIES

MAIN FEATURE

- SMD SAW Resonator L5.0*W5.0*H1.5mm 5050 Type 8 Pads
- Package Code QCC8C
- One Port SAW Resonator
- Electrostatic Sensitive Device (ESD)
- Low-loss and Short Lead time
- Cross more competitors part
- RoHS/RoHS III compliant

APPLICATION

- Bluetooth, wireless communication set
- Communication Electronics

RFQ
Request For Quotation

PART CODE GUIDE

SA	315M0000	S	001
1	2	3	4

1) SA: Part family Code for SMD SAW Resonator 5050 Type L5.0*W5.0*H1.5mm 8 Pads S3 Series

2) 315M0000: Frequency range code for 315.000MHz

3) S: SMD type, Package Tape/Reel, 1000pcs/Reel

4) 001: Specification code for original part No.: **TGS SR 315.0MA S3 TLF**

DIMENSION (Unit: mm)

Image for reference

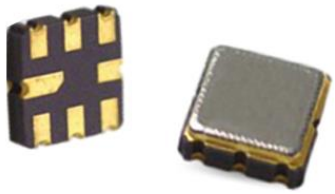

S3 series,

Package Code QCC8C

L5.0*W5.0*H1.5mm

5050 Type

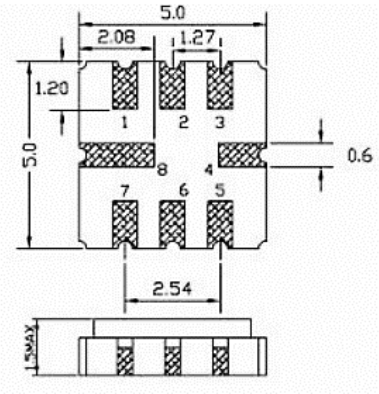

Pin	Configuration
2	Input
6	Output
1, 3, 5, 7	To be Grounded
4, 8	Case Ground

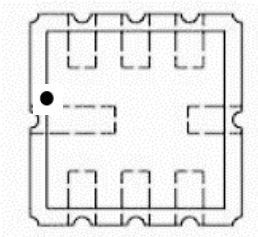

Marking:

Standard + ● **:** Pin 1

Test Circuit

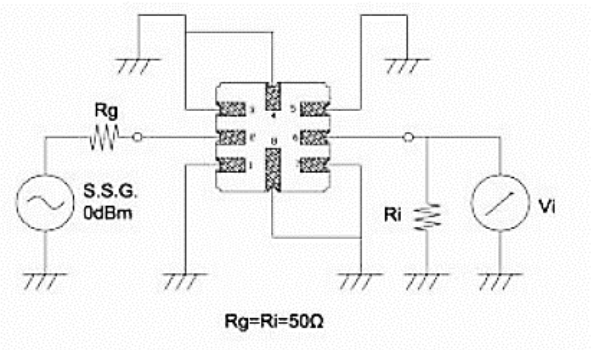

ELECTRICAL PARAMETERS

Parameter		Part No. Symbol	Units	Value		
				Min.	Typical	Max.
Original Manufacturer		TGS	TGS Crystals			
Holder Type		SR	SAW Resonator			
Frequency Range (f0)		315.0M	MHz	315.0000		
Frequency Tolerance		A	KHz	-75		+75
Operation Temperance			°C	-40		+85
Storage Temperance			°C	-40		+85
DC Voltage (between any Terminals)			V		5.0	
RF Power (in BW)			dBm		0	
ESD Voltage （HB）			V		400	
Insertion Loss			dB		1.4	2.2
Quality Factor (Q)	**Unload**			8000		12800
	50 Ω Loaded			1000		2000
Temperature Stability	**Turnover Temperature**		°C	10	25	40
	Frequency Temperature Coefficient		ppm/°C		0.032	
Aging			ppm/Year		≤±10	
DC Insulation Resistance			MΩ	1.0		
Transduce Static Capacitance			pF		2.13	
Hold Type		S3		5050 Type 8 Pads L5.0*W5.0*H1.35mm		
Other	**Package**	T	Tape/Reel, 1000pcs/Reel			
	RoHS Status	LF	RoHS III compliant			
	Add Value		Blank: N/A			
	Internal Control Code		Blank: N/A			

Note:

Original Part Number: **TGS SR 315.0MA S3 TLF**

FREQUENCY RESPONSE

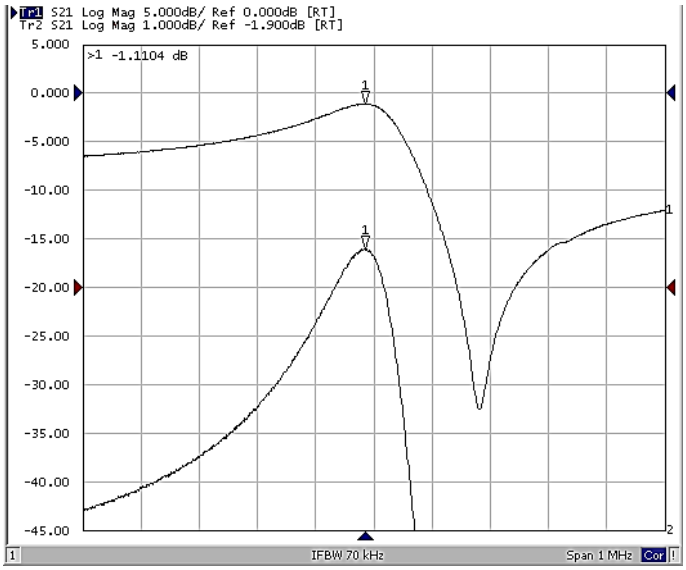

EQUIVALENT LC MODEL

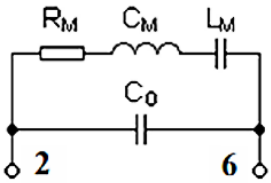

PLICTYPCIAL APATION CIRCUITS

Typical Low-power Transmitter Application

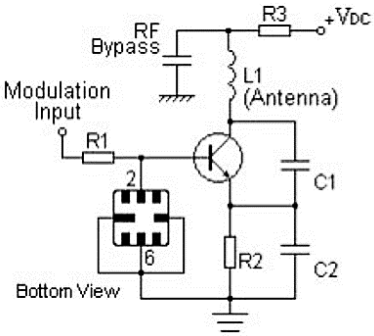

Typical Local Oscillator Application

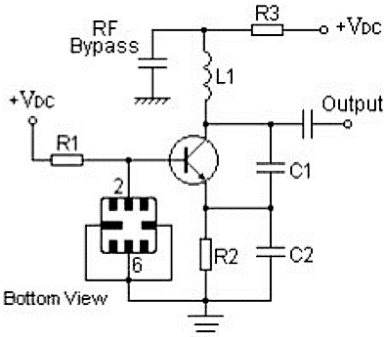

RELIABILITY

Test Items	Test Method And Conditions	Requirement
Temperature Storage	(1) Temperature: 85℃±2℃ , Duration: 250h , Recovery time: 2h±0.5h (2) Temperature: –55℃±3℃ , Duration: 250h ,Recovery time: 2h±0.5h	It shall remain electrical performance after tests
Humidity Test	Conditions: 60℃±2℃ , 90~95% RH Duration: 250h	
Thermal Shock	Heat cycle conditions: TA=-55℃±3℃, TB=85℃±2℃, t1=t2=30min, Switch time: ≤3min, Cycle time: 100 times, Recovery time: 2h±0.5h.	
Vibration Fatigue	Frequency of vibration: 10~55Hz Amplitude:1.5mm Directions: X,Y and Z Duration: 2h	
Drop Test	Cycle time: 10 times Height: 1.0m	
Solderability	Temperature: 245℃±5℃ Duration: 3.0s--5.0s Depth: DIP--2/3 , SMD--1/5	
Resistance to Soldering Heat	(1)Thickness of PCB:1mm , Solder condition: 260℃±5℃ , Duration: 10±1s (2)Temperature of Soldering Iron: 350℃±10℃ , Duration: 3~4s , Recovery time : 2 ± 0.5h	

SUGGESTED REFLOW PROFILE (For Reference Only)

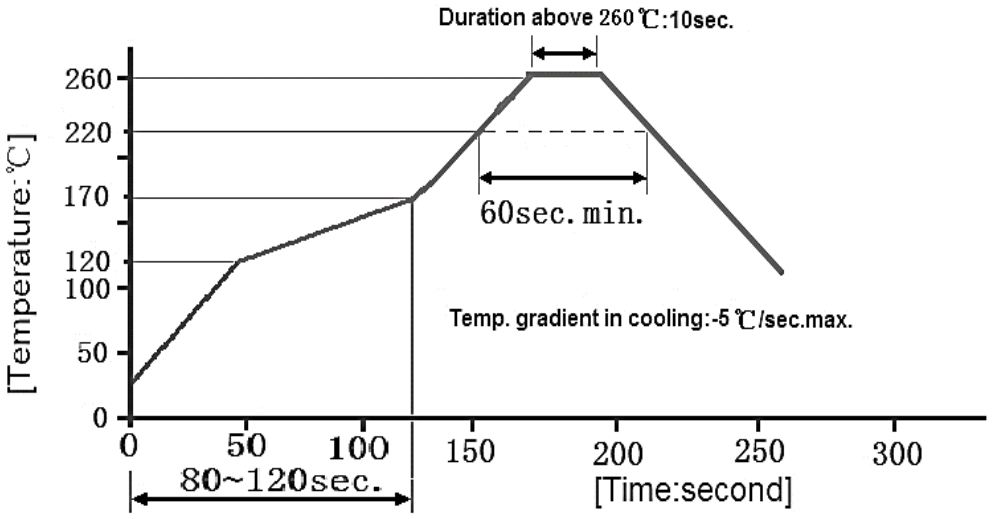

Reflow cycles:3 cycles max.

REEL DIMENSION (Unit: mm, 1000pcs/Reel)

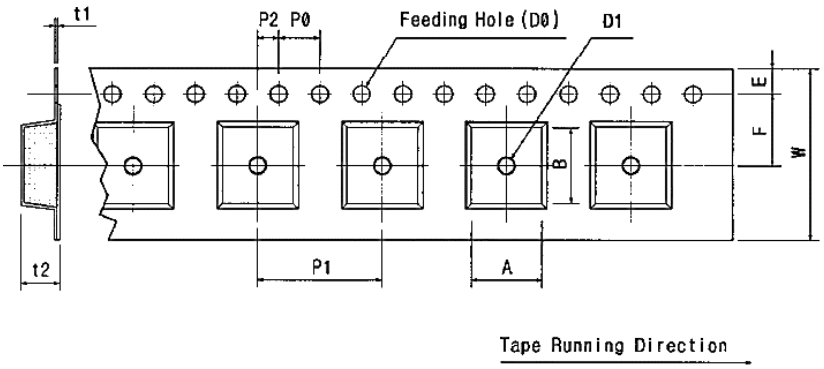

Code	Dimension
W	12.0+/-0.30
F	5.50+/-0.05
E	1.75+/-0.10
P 0	4.00+/-0.10
P 1	8.00+/-0.10
P 2	2.00+/-0.05
D 0	Ø1.5+/-0.10
D 1	Ø1.0+/-0.25
t 1	0.30+/-0.05
t 2	2.10+/-0.10
A	6.40+/-0.10
B	5.20+/-0.10

TAPE DIMENSION (Unit: mm)

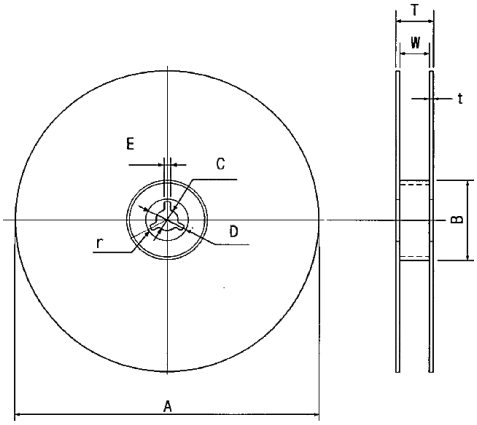

Code	Dimension
A	Ø330+/-1.0
B	Ø100+/-0.5
C	Ø13.0+/-0.5
D	Ø21+/-0.8
E	2.00+/-0.5
W	13.0+/-0.30
t	3.00 Max.
r	1.00 Max.

CAUTION

1. As a result of the particularity of inner structure of SAW products, it easy to be breakdown by electrostatic, so we should pay attention to ESD protect in the test.
2. Static voltage between signal load and ground may cause deterioration and destruction of the component. Please avoid static voltage.
3. Ultrasonic cleaning may cause deterioration and destruction of the component. Please avoid ultrasonic cleaning.
4. Only leads of component may be soldered. Please avoid soldering another part of component.
5. There is a close relationship between the device's performance and matching network. The specifications of this device are based on the test circuit shown above. L and C values may change depending on board layout. Values shown are intended as a guide only.
6. The temperature of manual welding should not exceed 300 ℃.
7. The specifications of this device are based on the test circuit shown above and subject to change or obsolescence without notice.
8. All equipment designs utilizing this product must be approved by the appropriate government agency prior to manufacture or sale.
9. Our liability is only assumed for the Surface Acoustic Wave (SAW) component(s) perse, not for applications, processes and circuits implemented within components or assemblies.
10. For questions on technology, prices and delivery, please contact our sales offices or e-mail: sales@NextGenComponent.com.

DISCLAIMER

NextGen Components, Inc. reserves the right to make changes to the product(s) and or information contained herein without notice. No liability is assumed as a result of their use or application. No rights under any patent accompany the sale of any such product(s) or information