VFA1-230-5M16

16mm Focal Length
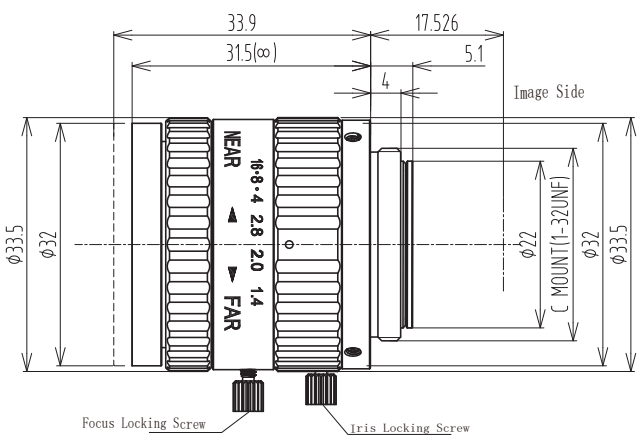
2/3" F1.4/16 C Mount					Working distance	Optical Magnification	2/3" Field of View(mm)	
Focal Length		f=16mm			mm	(X)	H	V
Max Diameter(RATIO)		F=1:1.4~16			900	0.018	503.2	376.8
Picture Size		2/3"	1/2"	1/3"	850	0.019	475.6	356.2
Angle	H	30.3°	22.3°	16.8°	800	0.020	448.0	335.5
	V	23°	16.8°	12.6°	750	0.021	420.4	314.8
	D	37.3°	27.8°	20.9°	700	0.023	392.8	294.1
Object Dimension at M.O.D	H	170.4mm	123.7mm	116mm	650	0.024	365.2	273.4
	V	127.6mm	92.7mm	69.4mm	600	0.026	337.6	252.8
	D	212.8mm	154.9mm	123.7mm	550	0.029	310.0	232.1
Distortion(TV)		<0.1%	<0.3%	<0.1%	500	0.031	282.5	211.4
Focus distance(min)		0.3M			450	0.035	254.9	190.7
Flange back		17.526mm in air			400	0.039	227.3	170.0
Back focus		12.7mm in air			350	0.044	199.7	149.4
Filter screw size		M30.5x0.5			300	0.052	170.4	127.6
Front/Rear Effective Dia		Front Φ19mm Rear Φ14.2mm			250	0.061	144.5	108.0
Mount		C-Mount			200	0.076	116.9	87.3
Temperature Range		-10~+50°C			150	0.100	89.3	66.6
Storage Temperature Range		-20~+60°C			100	0.145	61.7	45.9